Appendix C

- *CalTrans Letter Dated Jan. 21, '03*
- *Response To Comments*
- *Traffic Modeling Appendices*

STATE OF CALIFORNIA—BUSINESS, TRANSPORTATION AND HOUSING AGENCY GRAY DAVIS, Governor

DEPARTMENT OF TRANSPORTATION
P.O. BOX 2048 (1976 E. CHARTER WAY)
STOCKTON, CA 95201
TTY: California Relay Service (800) 735-2929
PHONE (209) 948-
FAX (209) 948-

RECEIVED
JAN 24 2003
COMMUNITY DEVELOPMENT DEPT
CITY OF LODI

Flex your power!
Be energy efficient!

January 21, 2003

10-SJ-12-15.155
SCH # 2002082099
NOP DEIR/NEG DEC
Vintner's Square Shopping Center

Mr. J.D. Hightower
City of Lodi
221 W. Pine Street
Lodi, CA 95240

Re: Notice of Preparation (NOP) of a Draft Environmental Impact Report (DEIR)/Negative Declaration (NEG DEC) for the Vintner's Square Shopping Center Development Project (December 2002)

Dear Mr. Hightower:

The California Department of Transportation (Department) appreciates the opportunity to review and comment on the Notice of Preparation (NOP) of a Draft Environmental Impact Report (DEIR)/Negative Declaration (NEG DEC) concerning the proposed Vintner's Square Shopping Center Development Project (Project) for the City of Lodi (City).

We have the following comments regarding the proposed commercial development Project.

- An Encroachment Permit will need to be obtained from the Department to access and/or construct within any state right-of-way. There maybe egress and ingress issues that should be addressed concerning traffic flow along State Route (SR) 12. A complete environmental assessment and/or document addressing impacts and mitigation measures on state right-of-way will need to be submitted with the Permit Application. More information regarding Permit requirements can be obtained through our web site at www.dot.ca.gov.

- A comprehensive Traffic Impact Study Report (Study) will need to be completed that considers conditions on SR 12 during the peak hours near the Project site before, during, and after construction. In addition, the Study should identify and address other transportation corridors that may be impacted currently and in the future at full build out scenario (i.e. I-5/SR 12, SR 99/12, etc.). This will assist us in determining the exact mitigation measures that maybe necessary. Please refer to our comment letter dated, September 26, 2002, on the Lowe Center (see Enclosure). The information is still applicable. More information regarding our Study requirements can be obtained through our web site at www.dot.ca.gov/hq/traffops/developserv/operationalsystems/reports/tisguide.pdf.

- Coordination and consultation with the Department will need to continue before, during, and after the planning and construction stages to identify and address potential transportation impacts at full build out scenario. These will need to include:

  A. Any potential issues/concerns on this Project's design plan(s) that may conflict with our future transportation corridor improvement plans.

  B. Potential cumulative transportation and/or environmental impacts that may occur when this and other development projects are fully implemented near this vicinity. Therefore, we strongly recommend that Impact, Developer, and/or Fair Share Fees be collected and deposited with the lead agency to pay for these future infrastructure upgrades, environmental, and/or other impacts. These may include mitigation measures such as HOV lanes, improvements to existing interchanges, frontage road(s), bicycle and pedestrian pathways, car and van pool lots, environmental banking/work, etc. In addition, the Department strongly recommends that the City coordinate with the local public transportation providers to assist in remediating increased transportation corridor impacts. Emphasis and details describing these measures and their implementation time line(s) should be incorporated within the environmental document.

  C. Any potential contamination runoffs onto state right-of-way facilities. Therefore, a complete set of drainage plans should be submitted that verify storm and non-storm water discharges will remain on the Project site or taken to the City system. The onsite detention should be incorporated into a onsite drainage system and some type of oil separator. In addition, a letter of approval from the City regarding this drainage system should include calculations, attenuation flows, onsite detention, oil/water separator, and available capacity of the main trunk line.

  All highway drainage should be captured in a system along the highway and taken to the drainage system at SR 12/Lower Sacramento Road. Any drainage inlets placed within state right-of-way should be Type G-3 or GO and have a 600-12X grate. Calculations should also be provided.

- Our concerns regarding increased air and noise pollution will need to be fully addressed in the environmental document. The number of future development projects along this corridor will increase existing ambient air and noise pollution levels within the San Joaquin County area. We may be able to address the noise pollution levels through sound attenuating devices, but not air pollution. Therefore, the issue of increased negative air quality will impact future transportation projects within this location.

- The environmental document should completely address our concerns regarding biological, cultural and archaeological resources. We recommend that you complete a biological survey by searching the Natural Diversity Database for Threatened and Endangered Species that was created by the California Department of Fish and Game.

EA ADDRESSEE COPIES
ORIGINATOR Legal Copies

In addition, a cultural survey of the Archaeological Survey Record Information Center will assist you in identifying whether there are any cultural and/or archaeological resources within the Project Area. We suggest that you contact the Native American Heritage Commission for advice on consulting with Native Americans regarding your cultural and/or archaeological concerns. Their mailing address is 915 Capitol Mall, Room 364, Sacramento, California 95814. Or they can be reached at (916) 653-4082 and fax number (916) 657-5390.

Because of the lack of supporting reference materials the Department was unable to provide a comprehensive assessment of this Project. Referenced attachments such as figures, summaries, reports, etc will need to be incorporated with any future environmental documents for us to do an accurate evaluation on each topic that may impact our transportation corridors.

Please continue to forward copies of reports on this proposed project for our review, comments, and records. If you have any questions, please contact me at (209) 941-1921. We look forward in continuing to work with you in a cooperative manner.

Sincerely,

TOM DUMAS, Chief
Office of Intermodal Planning

Enclosure

October 16, 2002

Mr. Paul Smith
Paul B. Smith Company
2680 Bishop Drive, Suite 206
San Ramon, CA 94583

Subject: Response To Comments; Omni-Means Engineers and Planners Draft Traffic Analysis for the Proposed Lowe's Retail Center, City of Lodi, (dated June 28, 2002)

Dear Mr. Smith:

The following responds to the comments received on the traffic analysis conducted for the proposed Lowe's Retail Center (Vintner's Square) in the City of Lodi. Specifically, comments on the traffic study from William D. Kopper (letter dated August 26, 2002) and Caltrans (letter dated September 26, 2002) have been responded to in the following sections.

William D. Kopper Letter (9-26-02),:

1. Page 11: Study intersection Level-of-Service (LOS) would degrade to LOS D at some locations with project traffic.

Currently, the Kettleman/Tienda intersection is operating at LOS D under *existing conditions* during the PM peak hour. With the addition of proposed project traffic, the intersections of Kettleman/Lower Sacramento and Kettleman/Mills would change from LOS C to LOS D during the PM peak hour (and the Kettleman/Tienda intersection would continue to operate at LOS D).

The City's General Plan circulation element states that "the City shall strive to maintain LOS C on local streets and intersections. The acceptable LOS goal will be consistent with the financial resources available and the limits of technical feasibility."

The City's goal regarding intersection LOS is to "strive to maintain LOS C on *local streets and intersections*." In the project site area, Kettleman Lane and Lower Sacramento Road would not be considered "local streets", rather, they are major arterials/highways providing regional east-west and north-south access. Kettleman Lane is State Route 12 which provides access to both Interstate 5 and State Route 99 freeways and carries a significant

amount of traffic. Lower Sacramento Road is a major north-south arterial street that provides an alternative route to both I-5 and SR99. Neither route would be considered a "local street" in the project site area.

In addition, prior to defining the scope of this project with City Engineering staff Omni-Means was instructed to be consistent with Caltrans *Guide for the Preparation of Traffic Impact Studies.*[1] These guidelines state that "Caltrans endeavors to maintain a target LOS at the transition between LOS C and LOS D on State Highway facilities, however, Caltrans acknowledges that this may not always be feasible and recommends that the lead agency consult with Caltrans to determine the appropriate target LOS. If an existing State highway facility is operating at less than appropriate target LOS, the existing measures of effectiveness (MOE's) should be maintained." Based on meetings and comments received from Caltrans and the City of Lodi, no agency has objected to mitigating intersections to LOS D with regard to these two major routes.[2] [3]

2. Page 11: For the Kettleman Lane/Tienda Drive intersection, a peak hour factor of 0.95 was used, rather than 0.92.

The peak hour factor (PHF) relates to movement volumes being adjusted to flow rates for a peak 15 minute period of analysis for LOS calculation purposes. This is just one of many data inputs for the "operational" LOS calculations conducted for this study. Other data inputs include lane width, cycle length, phasing splits, green time, lost time, yellow plus all red, signal type, area type, right-turn-on-red, etc. The City of Lodi currently uses/allows consultants to use a PHF of 0.95 for all signalized intersection LOS calculations within the City limits based on observed vehicle progressions at key intersections.[4] This PHF has been used on cumulative analyses conducted for the City by other consultants for the Lower Sacramento Road Widening project. For the purpose of this analysis, the software used to calculate intersection LOS used a "default" value PHF of 0.92 based on the *TRB Highway Capacity Manual.* However, a default PHF of 0.92 is not a required value of the HCM if there are other field measurements/observations. In this case, the City allows a PHF of

---

[1]Caltrans, Guide For The Preparation of Traffic Impact Studies, January 2001.

[2]Meeting with Caltrans (Mike Higgins), Mark Thomas Engineers (Rob Himes), and Paul Smith (Paul B. Smith Company), August 7, 2002.

[3]Mike Higgins, Caltrans, Letter to Mr. J. D. Hightower, City of Lodi, "Negative Deceleration Lowe's Center," Comment letter, September 26, 2002.

[4]Paula Fernandez, Senior Traffic Engineer, City of Lodi, Personal communication on September 11, 2002.

0.95 based on previous field observations/studies. Since a PHF of 0.92 was used for most LOS calculations in the study, the report's LOS calculations are likely conservative.

Please refer to DEIR traffic section for revised LOS calculations.

3. Page 12: Right-turn-on-red (RTOR) adjustments were made at the Kettleman Lane/Lower Sacramento Road intersection. .

With significant circulation improvements planned for the Kettleman Lane/Lower Sacramento Road intersection as part of cumulative plus project conditions, reasonable assumptions were made regarding right-turn-on-red volumes for the PM peak hour. Right-turn-on-red reductions are typically incorporated when left-turning vehicles on a separate phase effectively "protect" right-turn movements. As such, a right-turn-on-red reduction was applied to protected right-turn movements based on the intersection's left-turn movements. The City of Lodi recommended a RTOR adjustment based on circulation improvements for cumulative plus project conditions at this intersection. RTOR adjustments could have been made at all study intersections where these same conditions occur. However, as with PHF adjustments, intersection LOS was calculated starting with the most conservative data inputs. Reasonable adjustments were then made at specific intersection locations where City field observations and/or circulation improvements dictated. It is appropriate to assume that a portion of the traffic would make a right-turn-on-red where conditions permit.

Please refer to DEIR section for revised LOS calculations.

4. Page 12: Omni-Means used a project description of 288,740 square feet for the overall size of the proposed Vintner Square project.

At the time the draft traffic analysis was conducted for the negative declaration, the overall project size was described as 288,740 square (please refer to the DEIR for a summary of project components). The project description has since changed. The new overall square footage for the proposed Vintner Square project would be 299,817 square feet and can be summarized by project component as follows:

Lowes Retail Center	162,075 square feet
Winco	97,174 square feet
Fast-Food Restaurants	6,464 square feet
Retail	34,104 square feet
Total:	299,817 square feet

The project applicant states that only two of the retail pads would be "fast-food" type restaurants and this includes 6,464 square feet (as shown above). There would not be 18,240 square of fast-food restaurants within the parcel. Other retail pads may contain restaurant uses, however, these restaurants would not be fast-food in nature. Trip generation rates relating to these other retail-restaurant uses would be covered under the "shopping center" trip generation (see response #5).

With the new Vintner Square project description, the resulting change in peak hour project trip generation would be an increase of 14 net new AM peak hour trips and 38 net new PM peak hour trips. Based on project trip distribution and multiple driveway access points, this would not affect previous conclusions regarding study intersection LOS with project traffic.

5. Page 12: Trip generation calculations in the Omni-Means traffic study are flawed.

The proposed project trip generation has been based on the fact that this development is a large, neighborhood shopping center. We disagree with the statement that "there will be few customers walking from one destination to another within the shopping center without entering the public street system." The Institute of Transportation Engineers (ITE) defines shopping centers as "an integrated group of commercial establishments that is planned, developed, owned, and managed as a unit. A shopping center also provides on-site parking facilities sufficient to serve its own parking demands. Many shopping centers include outparcels (peripheral buildings or pads located on the perimeter of the center adjacent to the streets and major access points). These buildings are typically drive-in banks, retail stores, restaurants, or small offices."[5] Based on discussions with City Engineering staff (and based on a previous traffic study conducted for the a similar project on the same site), it was decided that trip generation for the Lowes and fast-food components would be calculated separately from the overall shopping center uses as a conservative measure.[6] The remaining retail uses (including the Winco and retail shops/restaurants) were calculated using the ITE shopping center trip generation rates.

The Omni-Means report does not "assume that large retail centers have a lower trip generation rate because there is on-site interaction among the various uses." The trip generation calculations shown in Table 3 of the traffic report indicate <u>no internal trip discount</u> has been taken for shopping center uses. Merely, the shopping center rate reflects the interaction between retail uses on the overall project site. ITE identifies "multi-

---

[5]Institute of Transportation Engineers (ITE), <u>Trip Generation</u>, 6th Edition, Land use (#820 shopping center), 1997.

[6]Sharon Welch, Senior Civil Engineer, City of Lodi, Personal communication on May 6, 2002.

use developments" as prime candidates for internal trip discounts. ITE also states that shopping centers are not prime candidates for internal trip discounts. Rather, ITE states the following; "A shopping center could also be considered a multi-use development. However, because data have been collected directly for them, shopping centers are considered as a single land use. The associated trip generation rates and equations given in *ITE Trip Generation* reflect the "multi-use" nature of the development because of the way shopping center data is collected. Accordingly, internal capture rates are not applicable and
should not be used to forecast trips for shopping center if using land use code 820 (shopping

centers) statistics and data."[7] Omni-Means has only used the shopping center rate for the Winco/retail shops/restaurant portion of the project which is recommended by ITE. With one homogeneous site and the sharing of access points with other project components, we would suggest that there would be trip interaction between sites. These interactions would tend to reduce off-site vehicle trips for the same types of establishments.

Omni-Means has not used a "Supermarket" rate for the Winco portion of the project for reasons stated above. In addition, ITE defines a supermarket as "free-standing retail store". Omni-Means would have used this rate if the project development included only a Winco store and nothing else. However, the Winco store serves as just one component of the overall shopping center's retail uses. Since the ITE definition of a shopping center describes the proposed project, the Winco/retail shops/restaurants trip generation' was calculated as a portion of the entire shopping center (excluding fast-food restaurants). This methodology takes into account that the shopping center functions as a whole with some interaction between uses, rather than as a set of individual buildings. As a conservative measure, the Lowe's and fast-food components of the proposed project were calculated using different trip generation rates because their uses are not reflected in the overall shopping center rate, even though they would be part of the overall shopping center components.

Neal K. Liddicoat, P.E., Senior Traffic Engineer, Martin Rivett Olsen Consulting Engineers, "Review of Traffic Impact Analysis for Vitner's Square Shopping Center - Lodi California," Letter to William D. Kopper, August 21, 2002.

1. Page 2: The project description employed in the traffic impact analysis varies from the descriptions in the City's Negative Declaration document.

---

[7]Institute of Transportation Engineers (ITE), Trip Generation Handbook--An ITE Proposed Recommended Practice, October 1998.

Please refer to response #4 for the William D. Kopper letter.

2. Page 2 and 3: Pass-by and trip generation estimates in Table 3 may be lower than would actually be experienced upon completion of the project.

Pass-by percentage discounts for proposed project land uses have been based on a previous traffic study conducted for a Home Depot development on the project site and published data from

ITE.[8] [9] It is acknowledged that ITE does not publish pass-by rates for daily trip generation. However, pass-by discounts for daily trip generation have been removed from project trip generation calculations (see revised DEIR traffic section).

With respect to pass-by discounts for AM and PM peak hour project trip generation, we have the following observations:

Lowes Store: AM and PM peak hour pass-by discounts were based on data found in the traffic study prepared for the previous Home Depot Store on the site (Fehr & Peers, 2001). In that study, pass-by rates were derived from Home Depot Stores for the daily and PM peak hour. The PM peak hour pass-by rate was found to be 25%. There was no pass-by rate provided for the AM peak hour. The assumption was made that the AM peak hour would have a similar pass-by discount rate. Further, ITE pass-by research on Home Improvement Stores indicates that the rate could be as high as 54% with the average pass-by rate at 48% for the PM peak hour.[10] Thus, using a pass-by rate of 25% for the both the AM and PM peak hours is a very conservative assumption.

Fast-Food Restaurants: AM and PM peak hour pass-by discounts were based on well established data published by ITE. These pass-by rates of 50% during the AM and PM

---

[8]Fehr and Peers Associates, Traffic Impact Study for the Proposed Home Deport on Kettleman Lane in the City of Lodi, January 29, 2002.

[9]Institute of Transportation Engineers (ITE), Trip Generation Handbook, Pass-by rates for land uses #820 Shopping Center and #834 Fast-Food Restaurant with Drive-Through Window, October 1998.

[10]ITE, Trip Generation Handbook, Ibid.....

peak hour are justified and reasonable.

Commercial-Retail Shops: AM and PM peak hour pass discounts for commercial-retail trips were based on the previous traffic study conducted for the project site (Fehr & Peers, 2001). Based on this study, a 25% pass-by rate was applied for peak hours. Again, ITE research on pass-by rates for commercial-retail shopping center trips indicates that a center of this size could have an average pass-by rate of 34% for the PM peak hour. As a conservative measure, a 25% pass-by rate was applied to both the AM and PM peak hours.

3. Project trip generation for the Lowe's, Fast-Food, and Commercial-Retail Shops may be lower than estimated.

Daily and peak hour trip generation for the Lowe's and Fast-Food Restaurant components of the
proposed project have been based on actual counts conducted for other Home Depot Stores and ITE research on fast-food restaurants with a drive-through lane. These rates and resulting trip generation are justified and reasonable.
Daily and peak hour trip generation for the commercial-retail trips have been based on ITE trip research for shopping centers. For a detailed explanation of the methodology used to calculate these trips, please refer to response #5 for the William D. Kopper letter.

4. Level-of-Service threshold may be improper.

Please refer to response #1 for the William D. Kopper letter with regard to intersection LOS thresholds.

5. Level-of-Service calculations are inconsistent.

Please refer to responses #2 and #3 for the William D. Kopper letter regarding intersection LOS calculations for the Kettleman Lane/Tienda Drive and Kettleman Lane/Lower Sacramento Road intersection.

In addition, with regard to the Kettleman Lane/Tienda Drive intersection, the reviewer is correct when stating that a PHF of 0.92 is the default value for the intersection LOS software. However, there is nothing in the Highway Capacity Manual that states the default values must be used in place of field observations and/or City guidelines. As noted previously, consultants for the City of Lodi have used a PHF 0.95 for all cumulative traffic studies performed for transportation modeling and roadway projects.

The City has instructed Omni-Means to assume new intersection geometries for cumulative plus project volumes which would render this comment moot (see revised DEIR LOS calculation sheets).

LOS calculation assumptions for RTOR at the Kettleman Lane/Lower Sacramento Road have been addressed in response #3 for the William D. Kopper letter. ROTR assumptions for cumulative and cumulative plus project conditions were done as a part of cumulative intersection improvements and discussions with City Traffic Engineering staff.

6. A peak hour factor (PHF) of 0 was used for the northbound left-turn movement at the Lower Sacramento Road/Taylor Road intersection.

The failure to input this PHF was a software error. Using a PHF 0.90 for the northbound left-turn movement would improve intersection LOS to B (10.4 seconds) for the AM peak hour and LOS B (12.4 seconds) during the PM peak hour (see revised DEIR traffic section intersection calculation sheets.

7. Project traffic volume assignment is inconsistent.

The assignment of proposed project trips is correct for existing plus project and cumulative plus project conditions. As shown in Table 3, there would be 483 net new AM peak hour project trips and 954 net new PM peak hour project trips. However, both net new and *pass-by* project trips are present at all project driveways. For the AM peak hour, this would equate to 746 trips (402 in, 344 out). For the PM peak hour, this would equate to 1,341 trips (652 in, 689 out). Both of these inbound/outbound project driveway trips are shown for existing plus project and cumulative plus project in Figures 3 and 5 in the initial Omni-Means study conducted for the proposed project. (After a review of these Figures, it was found that the PM peak hour is nine project trips short for inbound traffic at project driveways. This was a typographical error). Peak hour project trips were assigned to the street network based on the distribution found on page 10 of the Omni-Means traffic study.

Further discussion is appropriate in the application of project pass-by trips to major/minor intersections around the site. Since a pass-by trip is already on the adjacent street network (Kettleman Lane and Lower Sacramento Road), these trips are subtracted from through-traffic volumes on these roadways and added to turning movements in and out of the project site. For this reason, it would be difficult to compare existing volumes in Figure 2 with existing plus project volumes in Figure 3. The same conditions would be true in comparing Figures 4 and 5. Since through-volumes on Kettleman Lane and Lower Sacramento Road are being reduced (in some cases by 130-143 vehicles) it would be difficult to determine total project trip distribution as they leave the study areas on these roadways.

With a new project description, separate Figures have been generated which show project

trips only for the AM and PM peak hours. These Figures show both net new and pass-by project trips at project driveways and adjacent intersections and are based on the same distribution found in the Omni-Means traffic study.

Please refer to the revised DEIR traffic section for new project trip Figures.

8. The descriptions of roadway improvements are not consistent.

The description of planned roadway improvements for Lower Sacramento Road between Kettleman Lane and the project access point opposite the Sunwest Marketplace needs to be clarified. For clarification, the long-range cumulative circulation improvements for Lower Sacramento Road is to have a four-lane arterial segment with raised, landscaped medians. However, in this particular segment, Lower Sacramento Road would have additional "drop lanes" for the northbound right-turn movement into Sunwest Marketplace and southbound right-turn movement onto Kettleman Lane (with proposed project development). Hence, Lower Sacramento Road is ultimately planned to be a four-lane arterial street north Kettleman Lane, but would have additional "drop lanes" in the segment between Kettleman Lane and the main project access driveway. Per the Lower Sacramento Road Special Purpose Plan (December 19, 1997), Lower

Sacramento Road is ultimately planned to be six lanes with a raised, landscaped median south of Kettleman Lane. The City of Lodi is currently designing an interim four-lane segment for this segment at the time of this study.

9. The parking ordinance reference is incorrect. .

The Omni-Means traffic study did not evaluate project parking requirements based on City parking codes. This was evaluated as part of the overall Negative Deceleration.

Mike Higgins, California Department of Transportation (Caltrans), Traffic Operations Comments on Traffic Report by Omni Means, Letter to J.D. Hightower, City of Lodi, Planning Division, September 26, 2002.

1. Include the date of the Lowe's Commercial Center Transportation Impacts Report in the DEIR.

A revised version (and date) of the Omni-Means traffic analysis for the proposed Lowe's Commercial Center project will be included in the DEIR based on comments received from Caltrans and other groups.

2. Caltrans requests PM peak hour counts to be conducted for the Year 2002.

PM peak hour intersection counts/observations were conducted in the project study area. As stated in the Omni-Means traffic analysis, "PM peak hour intersection volumes were corroborated by a recent follow-up turning movement count conducted at the Lower Sacramento Road/Kettleman Lane intersection." In addition, the intersections of Tienda Drive/Kettleman Lane and Mills Avenue/Kettleman were observed for overall traffic flows and cycle lengths. New PM peak hour turning movement volumes counted at the Lower Sacramento Road/Kettleman Lane intersection were compared to prior PM peak hour counts conducted at the same location. PM peak hour volumes were then adjusted at other study intersection locations to reflect changes in traffic volumes. Overall, PM peak hour traffic volumes have decreased at the Lower Sacramento Road/Kettleman Lane intersection compared to Year 2000 volumes. However, for the purposed of this study the highest PM peak hour volumes were used for intersection analyses.

3. Caltrans requires a project-trip only Figure.

A project trip Figure will be provided in the DEIR traffic section.

4. The Caltrans TIS guidelines require an existing plus approved scenario. Caltrans requests the proposed commercial development on the southwest corner be included in the analysis.

An existing plus approved traffic scenario will be included in the DEIR and will include all approved project development in the study area identified by the City. With respect to the proposed commercial development on the southwest corner of the Lower Sacramento Road/Kettleman Lane intersection, this development has not yet been approved. Therefore, traffic development from this development was included in cumulative traffic projections supplied by the City. Specific project traffic related to this development will be analyzed as part of a future EIR. At that time, fair share portions can be determined as that study will include the detailed project trips from the DEIR for the Lowes Commercial Center.

5. All summary LOS worksheets show 2% for Heavy Vehicles. The Lower Sacramento Road/Kettleman Lane intersection has a heavy vehicle percentage of approximately 9%.

All study intersection LOS calculations have been up-dated in the DEIR to reflect current heavy vehicle percentages for Kettleman Lane.

6. Reductions for pass-by trips are higher than allowed in the Caltrans TIS guidelines.

Data supporting the pass-by reductions for the Lowe's and fast-food components of the proposed project have been provided in the appendices of DEIR.

7. Project distribution for Kettleman Lane at stated in the Omni-Means traffic study (page 10) shows 50% (20% to/from the west and 30% to/from the east). However, volumes on Figure 5 do not equal this total (42% AM and 40% PM). Please clarify.

As shown in Figure 5, there would be 81 trips inbound and 69 trips outbound to/from the west during the AM peak hour. During the PM peak hour, there would be 130 trips inbound and 137 outbound to/from the west (on Kettleman Lane). Both these totals for the AM and PM peak hours include net new trips and pass-by trips in/out from Road A and outbound from the limited access driveway off Kettleman Lane. This equates to 20% of the project trips to/from the west. Project trips to/from the east on Kettleman Lane include 79 inbound trips and 66 outbound trips during the AM peak hour to/from the east on Kettleman Lane. During the PM peak hour, there would be 139 inbound trips and 148 outbound trips to/from the east. These totals include just net new project trips (since pass-by trips are not clearly evident at these easterly intersections). This equates to exactly 30% of net new project trips. A new project trip Figure in the DEIR will exhibit project trips more clearly.

8. Project trip distribution has been based on two previous traffic studies.

The two studies will be referenced and included in the future DEIR.

9. Kettleman Lane will have a raised median between Lower Sacramento Road and Road "A".

10. On page 3 of the Omni-Means traffic study, the second sentence has been changed to read "East of Lower Sacramento Road, the roadway widens to provide two eastbound lanes and two westbound lanes with a raised median."

11., 12, 14, 15, 16. Re-calculate intersection LOS with recommended lane geometries.

All recommended intersection lane geometry improvements will be incorporated into the transportation appendices of the DEIR document.

13. Cycle lengths for cumulative intersection operation are shown to be 120 seconds. Cycle lengths any greater will require Caltrans approval.

17. Caltrans will review the revised TIS with newly incorporated comments. The

recommendation of using SYNCHRO version 5.0 software is noted.

Responses to all Caltrans comments will be incorporated into the traffic section of the DEIR. The recommendation of using SYNCHRO 5.0 software is noted. However, using this software for proposed project analyses is an extra level of analyses. All project study intersections have been mitigated to the extent possible to maintain LOS D or better with cumulative plus project conditions. Intersection LOS is based on software developed from the 2000 Highway Capacity Manual and consistent with Caltrans guidelines. Should a SYNCHO analysis still be desired, it is recommended that the City and Caltrans conduct a joint study for cumulative traffic conditions at all affected Highway 12 corridor intersections both in the project study area and beyond. It is noted, that, based on Caltrans Guide for the Preparation of Traffic Impact Studies, use of SYNCHRO is not required. The City does not have closely spaced signalized intersections in the project area. City staff does not recommend using SYNCHRO software.[11]

Please call if you have any questions.

Sincerely,

Peter J. Galloway
Transportation Planner

cc: Paula Fernandez, Senior Traffic Engineer, City of Lodi

[11]Paula Fernandez, Senior Traffic Engineer, City of Lodi, Personal communication on October 28, 2002.

TRANSPORTATION TECHNICAL APPENDICES

PROPOSED LOWE'S COMMERCIAL CENTER

CITY OF LODI

Intersection LOS Definitions
Intersection LOS Calculations
Pass-By Documentation
Approved Project Trip Generation
Lower Sacramento Road & Kettleman Lane Intersections

(Based on 2000 Highway Capacity Manual & ITE Trip Generation Handbook)

Omni-Means Engineers & Planners
1901 Olympic Boulevard, Suite 120
Walnut Creek, CA 94596
Phone # (925) 935-2230
Fax # (925) 935-2230

February, 2003

-Intersection LOS Definitions-

LEVEL OF SERVICE DEFINITIONS

LEVEL OF SERVICE	SIGNALIZED INTERSECTIONS	UNSIGNALIZED INTERSECTIONS*
"A"	Uncongested operations, all queues clear in a single-signal cycle. (Average stopped delay less than 10 seconds per vehicle; V/C less than or = 0.60).	Little or no delay. (Average delay of $\leq$ 10 seconds)
"B"	Uncongested operations, all queues clear in a single cycle. (Average delay of 10-20 seconds; V/C=0.61-0.70).	Short traffic delays. (Average delay of $>$10 and $\leq$15 secs.)
"C"	Light congestion, occasional backups on critical approaches. (Average delay of 20-35 seconds; V/C=0.71-0.80).	Average traffic delay. (Average delay of $>$15 and $\leq$25 secs.)
"D"	Significant congestion of critical approaches but intersection functional. Cars required to wait through more than one cycle during short peaks. No long queues formed. (Average delay of 35-55 seconds; V/C=0.81-0.90).	Long traffic delays for some approaches. (Average delay of $>$25 and $\leq$35 secs.)
"E"	Severe congestion with some long standing queues on critical approaches. Blockage of intersection may occur if traffic signal does not provide for protected turning movements. Traffic queue may block nearby intersection(s) upstream of critical approach(es). (Average delay of 55-80 seconds; V/C=0.91-1.00).	Very long traffic delays for some approaches. (Average delay of $>$35 and $\leq$50 secs.)
"F"	Total breakdown, stop-and-go operation. (Average delay in excess of 80 seconds; V/C of 1.01 or greater).	Extreme traffic delays for some approaches (intersection may be blocked by external causes--delays $>$50 seconds).

* Level of Service refers to delays encountered by certain stop sign controlled approaches. Other approaches may operate with little delay.

Source: Transportation Research Board, Highway Capacity Manual, 2000.

-Existing LOS Calculations-

CHAPTER 17 - TWSC - UNSIGNALIZED INTERSECTIONS WORKSHEET

Analysis Summary

General Information		Site Information	
Analyst	PJG	Jurisdiction/Date	CITY OF LODI 5/15/02
Agency or Company	OMNI-MEANS	Major Street	LOWER SACRAMENTO RD.
Analysis Period/Year	AM PEAK 2002	Minor Street	TAYLOR ROA
Comment	AM EXIST		

Input Data

Lane Configuration	SB	NB	EB	WB
Lane 1 (curb)	TR	T	LR	
Lane 2	T	T		
Lane 3		L		

	SB			NB			EB			WB		
Movement	1 (LT)	2 (TH)	3 (RT)	4 (LT)	5 (TH)	6 (RT)	7 (LT)	8 (TH)	9 (RT)	10 (LT)	11 (TH)	12 (RT)
Volume (veh/h)		574	1	0	373		3		6			
PHF		.9	.9	0	.9		.9		.9			
Proportion of heavy vehicles, HV		3	3	3	3		3		3			
Flow rate		638	1	0	414		3		7			
Flare storage (# of vehs)									3			
Median storage (# of vehs)							0					

Signal upstream of Movement 2 _____ ft Movement 5 _____ ft

Length of study period (h) 1

Output Data

	Lane	Movement	Flow Rate (veh/h)	Capacity (veh/h)	v/c	Queue Length (veh)	Control Delay (s)	LOS	Approach Delay and LOS
EB	1	LR	10	973	.01	<1	8.7	A	8.7
	2								
	3								A
WB	1								
	2								
	3								
		1							
		4	0						

©Catalina Engineering, Inc.

HICAP 2000 - Graphical Output

File

Delay(s) and LOS by Lane

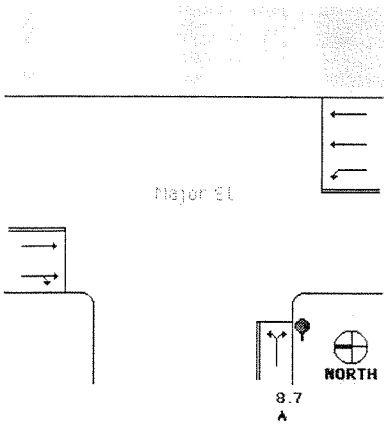

Hourly Movement Volume (veh/h)

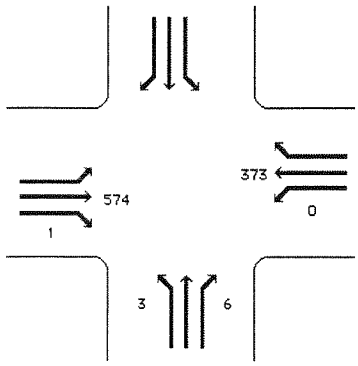

Chapter 17 - TWSC - Summary of Analysis

Analyst	PJG
Agency	OMNI-MEANS
Date	5/15/02
Period	AM PEAK
Major St.	LOWER SACRAMENTO RD.
Minor St.	TAYLOR ROAD

Approach	Delay	LOS
Minor St. (EB)	8.7 s	A
Minor St. (WB)	s	
Major LT (SB)	s	
Major LT (NB)	s	

CHAPTER 17 - TWSC - UNSIGNALIZED INTERSECTIONS WORKSHEET

Analysis Summary

General Information			Site Information		
Analyst	PJG		Jurisdiction/Date	CITY OF LODI	5/15/02
Agency or Company	OMNI-MEANS		Major Street	LOWER SACRAMENTO RD.	
Analysis Period/Year	PM PEAK	2002	Minor Street	TAYLOR ROA	
Comment	PM EXIST				

Input Data

Lane Configuration	SB	NB	EB	WB
Lane 1 (curb)	TR	T	LR	
Lane 2	T	T		
Lane 3		L		

	SB			NB			EB			WB		
Movement	1 (LT)	2 (TH)	3 (RT)	4 (LT)	5 (TH)	6 (RT)	7 (LT)	8 (TH)	9 (RT)	10 (LT)	11 (TH)	12 (RT)
Volume (veh/h)		526	6	9	789		4		5			
PHF		.9	.9	0	.9		.9		.9			
Proportion of heavy vehicles, HV		3	3	3	3		3		3			
Flow rate		584	7	0	877		4		6			
Flare storage (# of vehs)									3			
Median storage (# of vehs)							0					

Signal upstream of Movement 2 _____ ft Movement 5 _____ ft

Length of study period (h) 1

Output Data

	Lane	Movement	Flow Rate (veh/h)	Capacity (veh/h)	v/c	Queue Length (veh)	Control Delay (s)	LOS	Approach Delay and LOS
EB	1	LR	10	698	.014	<1	10.2	B	10.2
	2								
	3								B
WB	1								
	2								
	3								
		1							
		4	0	974	0	0	0		

©Catalina Engineering, Inc.

HCAP 2000 - Graphical Output

File

Delay(s) and LOS by Lane

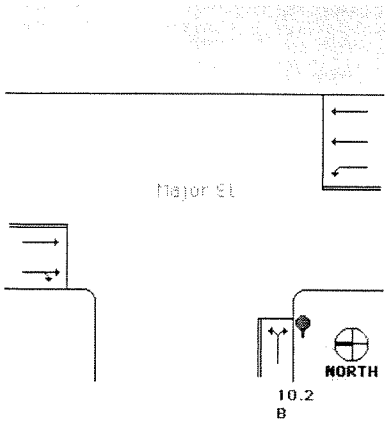

Hourly Movement Volume (veh/h)

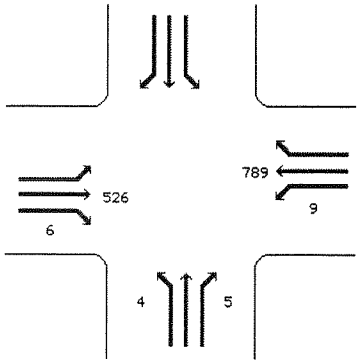

Chapter 17 - TWSC - Summary of Analysis

Analyst	PJG
Agency	OMNI-MEANS
Date	5/15/02
Period	PM PEAK
Major St.	LOWER SACRAMENTO RD.
Minor St.	TAYLOR ROAD

Approach	Delay	LOS
Minor St. (EB)	10.2 s	B
Minor St. (WB)	s	
Major LT (SB)	s	
Major LT (NB)	0 s	

CHAPTER 16 - OPERATIONAL ANALYSIS - SUMMARY WORKSHEET

General Information

Analyst	PJG
Agency or Company	OMNI-MEANS
Analysis Period/Year	AM PEAK 2002
Comment	AM EXIST

Site Information

Jurisdiction/Date	CITY OF LODI 5/15/02
EB/WB Street	SUNSET SAF
NB/SB Street	LOWER SACR

Intersection Data

Area type Other Analysis period 1 h Signal type Actuated-Field % Back of queue 95

	EB			WB			NB			SB		
	LT	TH	RT	LT	TH	RT	LT	TH	RT	LT	TH	RT
Volume (veh/h)				16		24		349	12	49	531	
RTOR volume (veh/h)						0			0			0
Peak-hour factor				.92		.92		.92	.92	.92	.92	
Heavy vehicles (%)				2		2		2	2	2	2	
Start-up lost time, l_1 (s)				2		2		2	2	2	2	
Extension of effective green, e (s)				2		2		2	2	2	2	
Arrival type, AT				3		3		3	3	3	3	
Approach pedestrian volume (p/h)				50			50			50		
Approach bicycle volume (bic/h)				0			0			0		
Left/right parking (Y or N)		/		N	/	N	N	/	N	N	/	N

Signal Phasing Plan

L: LT T: TH R: RT P: Peds

	Phase 1	Phase 2	Phase 3	Phase 4	Phase 5	Phase 6	Phase 7	Phase 8
EB								
WB	LR							
NB			TR					
SB		LT	T					
Green (s)	25	17	57					
Yellow + All red (s)	3	3	3					

Cycle (s) 108 Lost time per cycle (s) 6 Critical v/c Ratio .192

Intersection Performance

	EB			WB			NB			SB		
Lane group configuration				L		R		T	R	L	T	
No. of lanes				1		1		2	1	1	2	
Flow rate (veh/h)				17		26		379	13	53	577	
Capacity (veh/h)				410		340		1872	829	279	2519	
Adjusted saturation flow (veh/h)				1770		1469		3547	1571	1770	3533	
v/c ratio				.042		.077		.203	.016	.191	.229	
g/C ratio				.231		.231		.528	.528	.157	.713	
Average back of queue (veh)				.4		.6		3.4	.2	1.5	3.4	
Uniform delay (s)				32.2		32.5		13.5	12.1	39.5	5.3	
Incremental delay (s)				0		0		0	0	0	0	
Initial queue delay (s)				0		0		0	0	0	0	
Delay (s)				32.2		32.5		13.5	12.1	39.5	5.3	
LOS				C		C		B	B	D	A	
Approach delay (s)/LOS		/		32.4	/	C	13.4	/	B	8.2	/	A
Intersection delay (s)/ LOS			11.1			/				B		

©Catalina Engineering, Inc.

HCM 2000 - Graphical Output

File

Delay(s) and LOS by Lane

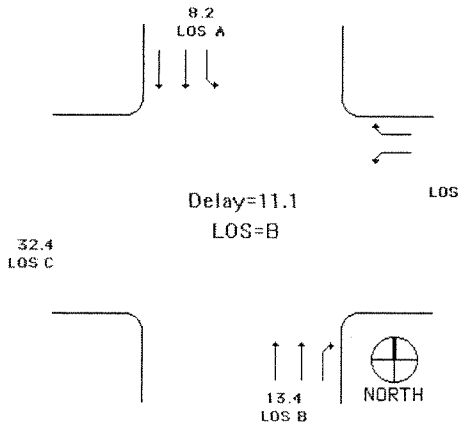

Hourly Movement Volume (veh/h)

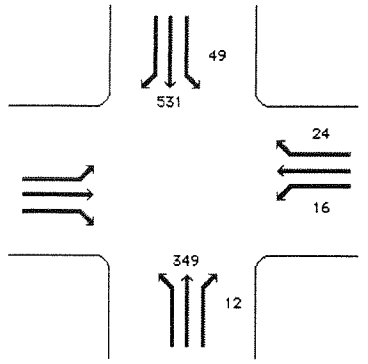

Chapter 16 - Signalized Intersections - Summary of Analysis

Analyst	PJG
Agency	OMNI-MEANS
Date	5/15/02
Period	AM PEAK
EW Street	SUNSET SAFEWAY DRVWY.
NS Street	LOWER SACRAMENTO RD.

Approach	Delay	LOS
EB approach	s	
WB approach	32.4 s	C
NB approach	13.4 s	B
SB approach	8.2 s	A

CHAPTER 16 - OPERATIONAL ANALYSIS - SUMMARY WORKSHEET

General Information

Analyst	PJG		
Agency or Company	OMNI-MEANS		
Analysis Period/Year	PM PEAK	2002	
Comment	PM EXIST		

Site Information

Jurisdiction/Date	CITY OF LODI	5/16/02
EB/WB Street	SUNSET SAF	
NB/SB Street	LOWER SACR	

Intersection Data

Area type: Other Analysis period: 1 h Signal type: Actuated-Field % Back of queue: 95

	EB			WB			NB			SB		
	LT	TH	RT	LT	TH	RT	LT	TH	RT	LT	TH	RT
Volume (veh/h)				25		93		689	51	74	526	
RTOR volume (veh/h)						0			0			0
Peak-hour factor				.92		.92		.92	.92	.92	.92	
Heavy vehicles (%)				2		2		2	2	2	2	
Start-up lost time, l_1 (s)				2		2		2	2	2	2	
Extension of effective green, e (s)				2		2		2	2	2	2	
Arrival type, AT				3		3		3	3	3	3	
Approach pedestrian volume (p/h)				50			50			50		
Approach bicycle volume (bic/h)				0			0			0		
Left/right parking (Y or N)		/		N	/	N	N	/	N	N	/	N

Signal Phasing Plan

L: LT T: TH R: RT P: Peds

	Phase 1	Phase 2	Phase 3	Phase 4	Phase 5	Phase 6	Phase 7	Phase 8
EB								
WB	LR							
NB			TR					
SB		LT	T					
Green (s)	25	17	57					
Yellow + All red (s)	3	3	3					

Cycle (s): 108 Lost time per cycle (s): 6 Critical v/c Ratio: .345

Intersection Performance

	EB			WB			NB			SB		
Lane group configuration				L		R		T	R	L	T	
No. of lanes				1		1		2	1	1	2	
Flow rate (veh/h)				27		101		749	55	80	572	
Capacity (veh/h)				410		340		1872	829	279	2519	
Adjusted saturation flow (veh/h)				1770		1469		3547	1571	1770	3533	
v/c ratio				.066		.297		.4	.067	.289	.227	
g/C ratio				.231		.231		.528	.528	.157	.713	
Average back of queue (veh)				.7		2.7		7.6	.9	2.3	3.4	
Uniform delay (s)				32.4		34.3		15.3	12.5	40.2	5.3	
Incremental delay (s)				0		0		0	0	0	0	
Initial queue delay (s)				0		0		0	0	0	0	
Delay (s)				32.4		34.3		15.3	12.5	40.2	5.3	
LOS				C		C		B	B	D	A	
Approach delay (s)/LOS		/		33.9	/	C	15.1	/	B	9.6	/	A
Intersection delay (s)/ LOS			14.3			/				B		

©Catalina Engineering, Inc.

HCAP 2000 - Graphical Output

File

Delay(s) and LOS by Lane

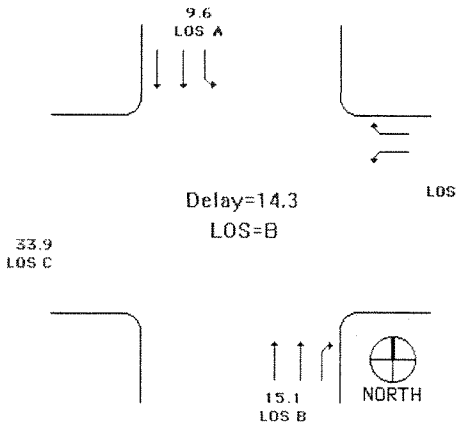

Hourly Movement Volume (veh/h)

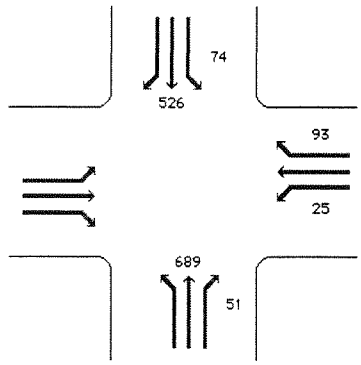

Chapter 16 - Signalized Intersections - Summary of Analysis

Analyst	PJG
Agency	OMNI-MEANS
Date	5/16/02
Period	PM PEAK
EW Street	SUNSET SAFEWAY DRVWY.
NS Street	LOWER SACRAMENTO RD.

Approach	Delay	LOS
EB approach	s	
WB approach	33.9 s	C
NB approach	15.1 s	B
SB approach	9.6 s	A

CHAPTER 16 - OPERATIONAL ANALYSIS - SUMMARY WORKSHEET

General Information

Analyst: PJG
Agency or Company: OMNI-MEANS
Analysis Period/Year: AM PEAK 2002
Comment: AM EXIST

Site Information

Jurisdiction/Date: CITY OF LODI 12/10/02
EB/WB Street: KETTLEMEN
NB/SB Street: LOWER SACR

Intersection Data

Area type: Other Analysis period: 1 h Signal type: Actuated-Field % Back of queue: 95

	EB			WB			NB			SB		
	LT	TH	RT	LT	TH	RT	LT	TH	RT	LT	TH	RT
Volume (veh/h)	74	329	6	166	359	81	28	158	143	158	312	89
RTOR volume (veh/h)			0			79			83			0
Peak-hour factor	.92	.92	.92	.92	.92	.92	.92	.92	.92	.92	.92	.92
Heavy vehicles (%)	9	9	9	9	9	9	2	2	2	2	2	2
Start-up lost time, l_1 (s)	2	2	2	2	2	2	2	2	2	2	2	2
Extension of effective green, e (s)	2	2	2	2	2	2	2	2	2	2	2	2
Arrival type, AT	3	3	3	3	3	3	3	3	3	3	3	3
Approach pedestrian volume (p/h)	50			50			50			50		
Approach bicycle volume (bic/h)	0			0			0			0		
Left/right parking (Y or N)	N	/	N	N	/	N	N	/	N	N	/	N

Signal Phasing Plan

L: LT T: TH R: RT P: Peds

	Phase 1	Phase 2	Phase 3	Phase 4	Phase 5	Phase 6	Phase 7	Phase 8
EB	L		TR					
WB	L	LTR	TR					
NB				L		TR		
SB				L	LTR	TR		
Green (s)	17	5	24	12	5	19		
Yellow + All red (s)	3	3	3	3	3	3		

Cycle (s): 100 Lost time per cycle (s): 12 Critical v/c Ratio: .346

Intersection Performance

	EB			WB			NB			SB		
Lane group configuration	L	TR		L	T	R	L	T	R	L	TR	
No. of lanes	2	2		2	2	1	2	3	1	2	2	
Flow rate (veh/h)	80	364		180	390	2	30	172	65	172	436	
Capacity (veh/h)	547	790		804	1062	448	412	964	277	687	911	
Adjusted saturation flow (veh/h)	3216	3293		3216	3319	1401	3437	5074	1460	3437	3373	
v/c ratio	.147	.461		.224	.367	.005	.074	.178	.235	.25	.479	
g/C ratio	.17	.24		.25	.32	.32	.12	.19	.19	.2	.27	
Average back of queue (veh)	59.3	58		80.1	88.4	111.6	48.1	67.4	54.7	66.6	64.9	
Uniform delay (s)	35.3	32.5		29.8	26.2	23.2	39.1	34	34.3	33.7	30.6	
Incremental delay (s)	0	.3		0	0	0	0	0	0	0	.3	
Initial queue delay (s)	0	0		0	0	0	0	0	0	0	0	
Delay (s)	35.3	32.8		29.8	26.2	23.2	39.1	34	34.3	33.7	30.9	
LOS	D	C		C	C	C	D	C	C	C	C	
Approach delay (s)/LOS	33.2	/	C	27.3	/	C	34.6	/	C	31.7	/	C
Intersection delay (s)/ LOS	31.2					/				C		

©Catalina Engineering, Inc.

HCAP 2000 - Graphical Output

File

Delay(s) and LOS by Lane

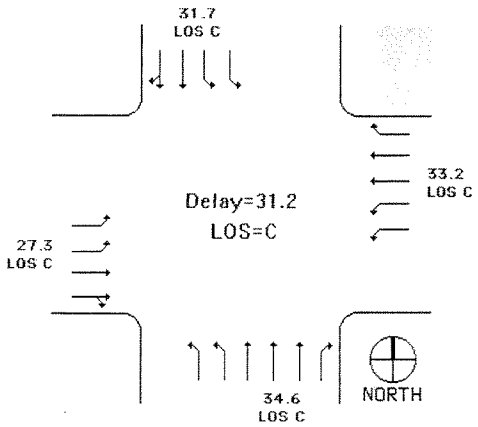

Hourly Movement Volume (veh/h)

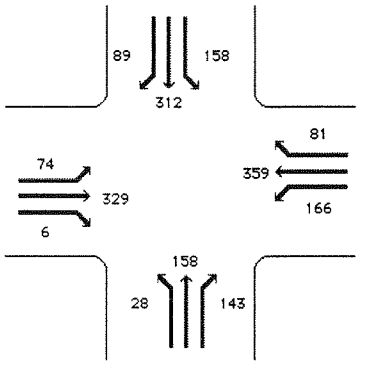

Chapter 16 - Signalized Intersections - Summary of Analysis

Analyst	PJG
Agency	OMNI-MEANS
Date	12/10/02
Period	AM PEAK
EW Street	KETTLEMEN LN.
NS Street	LOWER SACRAMENTO RD.

Approach	Delay	LOS
EB approach	33.2 s	C
WB approach	27.3 s	C
NB approach	34.6 s	C
SB approach	31.7 s	C

CHAPTER 16 - OPERATIONAL ANALYSIS - SUMMARY WORKSHEET

General Information

Analyst	PJG
Agency or Company	OMNI-MEANS
Analysis Period/Year	PM PEAK 2002
Comment	PM EXIST

Site Information

Jurisdiction/Date	CITY OF LODI 12/10/02
EB/WB Street	KETTLEMEN
NB/SB Street	LOWER SACR

Intersection Data

Area type Other Analysis period 1 h Signal type Actuated-Field % Back of queue 95

	EB			WB			NB			SB		
	LT	TH	RT	LT	TH	RT	LT	TH	RT	LT	TH	RT
Volume (veh/h)	111	460	104	106	265	256	45	398	115	269	338	75
RTOR volume (veh/h)			0			135			53			0
Peak-hour factor	.92	.92	.92	.92	.92	.92	.92	.92	.92	.92	.92	.92
Heavy vehicles (%)	9	9	9	9	9	9	2	2	2	2	2	2
Start-up lost time, l_1 (s)	2	2	2	2	2	2	2	2	2	2	2	2
Extension of effective green, e (s)	2	2	2	2	2	2	2	2	2	2	2	2
Arrival type, AT	3	3	3	3	3	3	3	3	3	3	3	3
Approach pedestrian volume (p/h)	50			50			50			50		
Approach bicycle volume (bic/h)	0			0			0			0		
Left/right parking (Y or N)	N	/	N	N	/	N	N	/	N	N	/	N

Signal Phasing Plan

L: LT T: TH R: RT P: Peds

	Phase 1	Phase 2	Phase 3	Phase 4	Phase 5	Phase 6	Phase 7	Phase 8
EB	L	LTR	TR					
WB	L		TR					
NB				L		TR		
SB				L	LTR	TR		
Green (s)	17	5	27	12	5	18		
Yellow + All red (s)	3	3	3	3	3	3		

Cycle (s) 102 Lost time per cycle (s) 12 Critical v/c Ratio .452

Intersection Performance

	EB			WB			NB			SB		
Lane group configuration	L	TR		L	T	R	L	T	R	L	TR	
No. of lanes	2	2		2	2	1	2	3	1	2	2	
Flow rate (veh/h)	121	613		115	288	132	49	433	67	292	449	
Capacity (veh/h)	788	1094		536	879	367	404	895	257	674	867	
Adjusted saturation flow (veh/h)	3216	3189		3216	3319	1387	3437	5074	1458	3437	3400	
v/c ratio	.153	.56		.215	.328	.358	.121	.483	.262	.434	.518	
g/C ratio	.245	.343		.167	.265	.265	.118	.176	.176	.196	.255	
Average back of queue (veh)	84.9	67.9		54.1	77.3	62.1	45.1	42.6	49.2	51.6	58.2	
Uniform delay (s)	30.2	27.2		36.7	30.2	30.5	40.3	37.8	36.3	36	32.6	
Incremental delay (s)	0	.7		0	0	0	0	.4	0	.2	.6	
Initial queue delay (s)	0	0		0	0	0	0	0	0	0	0	
Delay (s)	30.2	27.9		36.7	30.2	30.5	40.3	38.2	36.3	36.3	33.2	
LOS	C	C		D	C	C	D	D	D	D	C	
Approach delay (s)/LOS	28.3	/	C	31.7	/	C	38.1	/	D	34.4	/	C
Intersection delay (s)/ LOS	32.9					/				C		

©Catalina Engineering, Inc.

HCAP 2000 - Graphical Output

File

Delay(s) and LOS by Lane

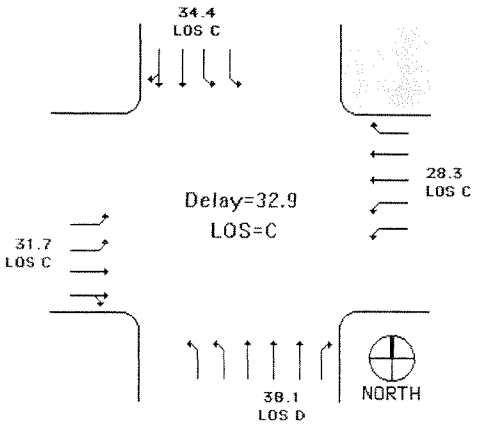

Hourly Movement Volume (veh/h)

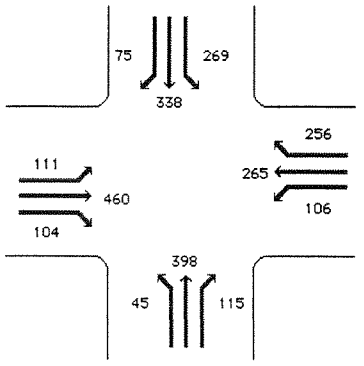

Chapter 16 - Signalized Intersections - Summary of Analysis

Analyst	PJG
Agency	OMNI-MEANS
Date	12/10/02
Period	PM PEAK
EW Street	KETTLEMEN LN.
NS Street	LOWER SACRAMENTO RD.

Approach	Delay	LOS
EB approach	28.3 s	C
WB approach	31.7 s	C
NB approach	38.1 s	D
SB approach	34.4 s	C

CHAPTER 16 - OPERATIONAL ANALYSIS - SUMMARY WORKSHEET

General Information

Analyst	PJG
Agency or Company	OMNI-MEANS
Analysis Period/Year	AM PEAK 2002
Comment	AM EXIST

Site Information

Jurisdiction/Date	CITY OF LODI 2/12/03
EB/WB Street	KETTLEMEN
NB/SB Street	TIENDA DR.

Intersection Data

Area type Other Analysis period 1 h Signal type Actuated-Field % Back of queue 95

	EB			WB			NB			SB		
	LT	TH	RT	LT	TH	RT	LT	TH	RT	LT	TH	RT
Volume (veh/h)	13	594	25	105	565	29	19	12	69	47	33	27
RTOR volume (veh/h)			10			15			0			13
Peak-hour factor	.92	.92	.92	.92	.92	.92	.92	.92	.92	.92	.92	.92
Heavy vehicles (%)	9	9	9	9	9	9	2	2	2	2	2	2
Start-up lost time, l_1 (s)	2	2	2	2	2	2	2	2	2	2	2	2
Extension of effective green, e (s)	2	2	2	2	2	2	2	2	2	2	2	2
Arrival type, AT	3	3	3	3	3	3	3	3	3	3	3	3
Approach pedestrian volume (p/h)	50			50			50			50		
Approach bicycle volume (bic/h)	0			0			0			0		
Left/right parking (Y or N)	N	/	N	N	/	N	N	/	N	N	/	N

Signal Phasing Plan

L: LT T: TH R: RT P: Peds

	Phase 1	Phase 2	Phase 3	Phase 4	Phase 5	Phase 6	Phase 7	Phase 8
EB	L		TR					
WB	L	LTR	TR					
NB				LTR				
SB					LTR			
Green (s)	12	5	49	12	12			
Yellow + All red (s)	3	3	3	3	3			

Cycle (s) 105 Lost time per cycle (s) 12 Critical v/c Ratio .374

Intersection Performance

	EB			WB			NB			SB		
Lane group configuration	L	T	R	L	T	R		LTR		L	LT	R
No. of lanes	1	2	1	1	2	1		2		1	1	1
Flow rate (veh/h)	14	646	16	114	614	15		109		51	36	15
Capacity (veh/h)	189	1549	649	315	1802	776		318		202	213	156
Adjusted saturation flow (veh/h)	1656	3319	1391	1656	3319	1430		2787		1770	1863	1368
v/c ratio	.075	.417	.025	.362	.341	.02		.341		.253	.168	.097
g/C ratio	.114	.467	.467	.19	.543	.543		.114		.114	.114	.114
Average back of queue (veh)	44.2	119.6	158.5	53.4	153.8	190.4		27.8		39.2	45.3	35.7
Uniform delay (s)	41.5	18.5	15.1	37	13.5	11.1		42.9		42.4	42	41.6
Incremental delay (s)	0	.1	0	0	0	0		0		0	0	0
Initial queue delay (s)	0	0	0	0	0	0		0		0	0	0
Delay (s)	41.5	18.6	15.1	37	13.5	11.1		42.9		42.4	42	41.6
LOS	D	B	B	D	B	B		D		D	D	D
Approach delay (s)/LOS	19	/	B	17	/	B	42.9	/	D	42.2	/	D
Intersection delay (s)/ LOS	21.1				/					C		

HiCAP 2000 ™
©Catalina Engineering, Inc.

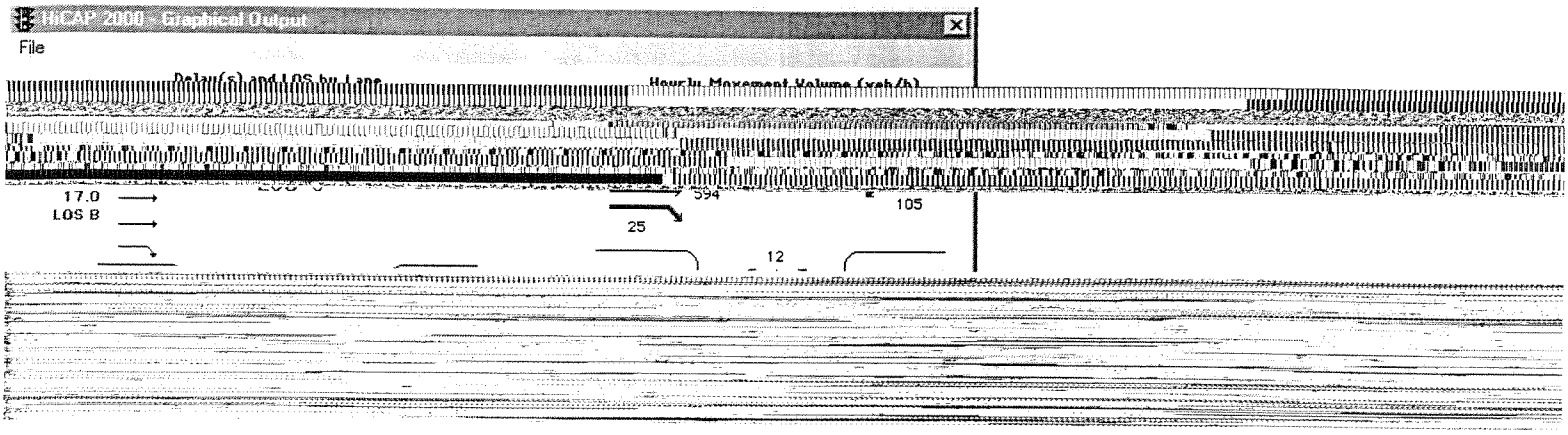
HiCAP 2000 - Graphical Output
File
Hourly Movement Volume (veh/h)
17.0
LOS B
594
105
25
12

CHAPTER 16 - OPERATIONAL ANALYSIS - SUMMARY WORKSHEET

General Information

Analyst: ANALYST
Agency or Company: OMNI-MEANS
Analysis Period/Year: PM PEAK 2002
Comment: PM EXIST

Site Information

Jurisdiction/Date: CITY OF LODI 2/12/03
EB/WB Street: KETTLEMEN
NB/SB Street: TIENDA DR.

Intersection Data

Area type: Other Analysis period: 1 h Signal type: Actuated-Field % Back of queue: 95

	EB			WB			NB			SB		
	LT	TH	RT	LT	TH	RT	LT	TH	RT	LT	TH	RT
Volume (veh/h)	115	562	60	278	377	129	94	62	267	113	113	57
RTOR volume (veh/h)			30			65			0			30
Peak-hour factor	.92	.92	.92	.92	.92	.92	.92	.92	.92	.92	.92	.92
Heavy vehicles (%)	9	9	9	9	9	9	2	2	2	2	2	2
Start-up lost time, l_1 (s)	2	2	2	2	2	2	2	2	2	2	2	2
Extension of effective green, e (s)	2	2	2	2	2	2	2	2	2	2	2	2
Arrival type, AT	3	3	3	3	3	3	3	3	3	3	3	3
Approach pedestrian volume (p/h)	50			50			50			50		
Approach bicycle volume (bic/h)	0			0			0			0		
Left/right parking (Y or N)	N	/	N	N	/	N	N	/	N	N	/	N

Signal Phasing Plan

L: LT T: TH R: RT P: Peds

	Phase 1	Phase 2	Phase 3	Phase 4	Phase 5	Phase 6	Phase 7	Phase 8
EB	L		TR					
WB	L	LTR	TR					
NB				LTR				
SB					LTR			
Green (s)	14	5	37	22	12			
Yellow + All red (s)	3	3	3	3	3			

Cycle (s): 105 Lost time per cycle (s): 12 Critical v/c Ratio: .668

Intersection Performance

	EB			WB			NB			SB		
Lane group configuration	L	T	R	L	T	R		LTR		L	LT	R
No. of lanes	1	2	1	1	2	1		2		1	1	1
Flow rate (veh/h)	125	611	33	302	410	70		460		123	123	29
Capacity (veh/h)	221	1170	481	347	1422	608		618		202	213	156
Adjusted saturation flow (veh/h)	1656	3319	1366	1656	3319	1419		2947		1770	1863	1368
v/c ratio	.566	.522	.068	.871	.288	.114		.745		.607	.577	.188
g/C ratio	.133	.352	.352	.21	.429	.429		.21		.114	.114	.114
Average back of queue (veh)	27.8	77.5	112.8	22.2	130.7	135.9		27.1		23.7	26.3	32.6
Uniform delay (s)	42.7	27	22.6	40.1	19.6	18		38.9		44.3	44.1	42.1
Incremental delay (s)	3.4	.4	0	25.2	0	0		5.1		5.3	3.9	0
Initial queue delay (s)	0	0	0	0	0	0		0		0	0	0
Delay (s)	46.1	27.4	22.6	65.3	19.6	18		43.9		49.6	48	42.1
LOS	D	C	C	E	B	B		D		D	D	D
Approach delay (s)/LOS	30.2	/	C	37.1	/	D	43.9	/	D	48.1	/	D
Intersection delay (s)/ LOS	37.5				/					D		

©Catalina Engineering, Inc.

HCAP 2000 - Graphical Output

File

Delay(s) and LOS by Lane

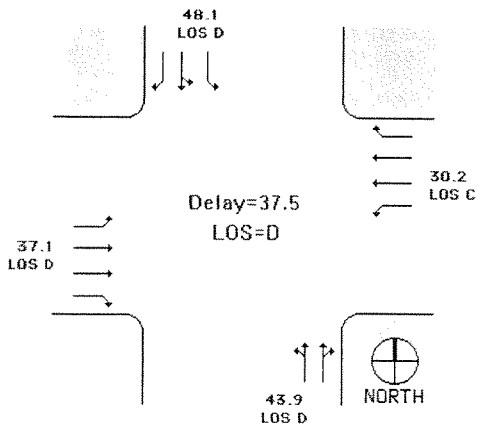

Hourly Movement Volume (veh/h)

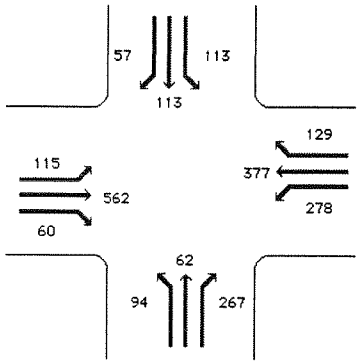

Chapter 16 - Signalized Intersections - Summary of Analysis

Analyst	ANALYST
Agency	OMNI-MEANS
Date	2/12/03
Period	PM PEAK
EW Street	KETTLEMEN LN.
NS Street	TIENDA DR.

Approach	Delay	LOS
EB approach	30.2 s	C
WB approach	37.1 s	D
NB approach	43.9 s	D
SB approach	48.1 s	D

CHAPTER 16 - OPERATIONAL ANALYSIS - SUMMARY WORKSHEET

General Information

Analyst	PJG
Agency or Company	OMNI-MEANS
Analysis Period/Year	AM PEAK 2002
Comment	AM EXIST

Site Information

Jurisdiction/Date	CITY OF LODI 12/10/02
EB/WB Street	KETTLEMEN
NB/SB Street	S. MILLS A

Intersection Data

Area type Other Analysis period 1 h Signal type Actuated-Field % Back of queue 95

	EB			WB			NB			SB		
	LT	TH	RT	LT	TH	RT	LT	TH	RT	LT	TH	RT
Volume (veh/h)	20	560	51	37	486	43	135	127	44	86	57	33
RTOR volume (veh/h)			25			22			0			10
Peak-hour factor	.92	.92	.92	.92	.92	.92	.92	.92	.92	.92	.92	.92
Heavy vehicles (%)	9	9	9	9	9	9	2	2	2	2	2	2
Start-up lost time, l_1 (s)	2	2	2	2	2	2	2	2	2	2	2	2
Extension of effective green, e (s)	2	2	2	2	2	2	2	2	2	2	2	2
Arrival type, AT	3	3	3	3	3	3	3	3	3	3	3	3
Approach pedestrian volume (p/h)	50			50			50			50		
Approach bicycle volume (bic/h)	0			0			0			0		
Left/right parking (Y or N)	N	/	N	N	/	N	N	/	N	N	/	N

Signal Phasing Plan

L: LT T: TH R: RT P: Peds

	Phase 1	Phase 2	Phase 3	Phase 4	Phase 5	Phase 6	Phase 7	Phase 8
EB	L		TR					
WB	L	LTR	TR					
NB				L	LTR	TR		
SB				L		TR		
Green (s)	12	5	49	12	5	15		
Yellow + All red (s)	3	3	3	3	3	3		

Cycle (s) 116 Lost time per cycle (s) 12 Critical v/c Ratio .531

Intersection Performance

	EB			WB			NB			SB		
Lane group configuration	L	T	R	L	T	R	L	TR		L	T	R
No. of lanes	1	2	1	1	1	1	1	1		1	1	1
Flow rate (veh/h)	22	609	28	40	528	23	147	186		93	62	25
Capacity (veh/h)	171	1402	584	286	857	686	305	345		183	241	164
Adjusted saturation flow (veh/h)	1656	3319	1383	1656	1743	1395	1770	1742		1770	1863	1267
v/c ratio	.127	.434	.048	.141	.617	.033	.481	.538		.511	.257	.153
g/C ratio	.103	.422	.422	.172	.491	.491	.172	.198		.103	.129	.129
Average back of queue (veh)	38.1	106.6	139.6	62.5	95.7	166.1	44.2	45.8		25.5	46.6	35.5
Uniform delay (s)	47.2	23.7	19.8	40.7	21.5	15.3	43.3	41.7		49.2	45.5	44.9
Incremental delay (s)	0	.1	0	0	1.4	0	1	1.7		2.4	0	0
Initial queue delay (s)	0	0	0	0	0	0	0	0		0	0	0
Delay (s)	47.2	23.8	19.8	40.7	22.9	15.3	44.4	43.4		51.6	45.5	44.9
LOS	D	C	B	D	C	B	D	D		D	D	D
Approach delay (s)/LOS	24.4	/	C	23.8	/	C	43.8	/	D	48.6	/	D
Intersection delay (s)/ LOS	30.3			/						C		

©Catalina Engineering, Inc.

HiCAP 2000 - Graphical Output

File

Delay(s) and LOS by Lane

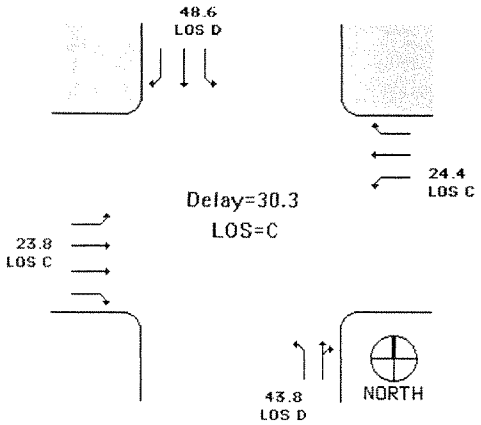

Hourly Movement Volume (veh/h)

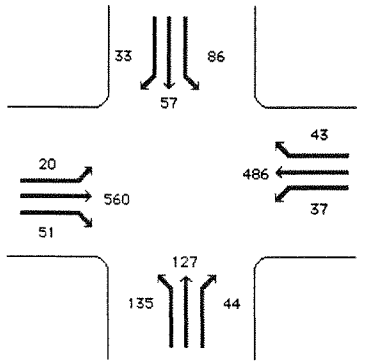

Chapter 16 - Signalized Intersections - Summary of Analysis

Analyst	PJG
Agency	OMNI-MEANS
Date	12/10/02
Period	AM PEAK
EW Street	KETTLEMEN LN.
NS Street	S. MILLS AVE.

Approach	Delay	LOS
EB approach	24.4 s	C
WB approach	23.8 s	C
NB approach	43.8 s	D
SB approach	48.6 s	D

CHAPTER 16 - OPERATIONAL ANALYSIS - SUMMARY WORKSHEET

General Information

Analyst	ANALYST
Agency or Company	OMNI-MEANS
Analysis Period/Year	PM PEAK 2002
Comment	PM PEAK

Site Information

Jurisdiction/Date	CITY OF LODI 12/10/02
EB/WB Street	KETTLEMEN
NB/SB Street	S. MILLS A

Intersection Data

Area type Other Analysis period 1 h Signal type Actuated-Field % Back of queue 95

	EB			WB			NB			SB		
	LT	TH	RT	LT	TH	RT	LT	TH	RT	LT	TH	RT
Volume (veh/h)	60	757	67	87	695	42	84	92	49	54	82	52
RTOR volume (veh/h)			35			21			0			26
Peak-hour factor	.92	.92	.92	.92	.92	.92	.92	.92	.92	.92	.92	.92
Heavy vehicles (%)	9	9	9	9	9	9	2	2	2	2	2	2
Start-up lost time, l_1 (s)	2	2	2	2	2	2	2	2	2	2	2	2
Extension of effective green, e (s)	2	2	2	2	2	2	2	2	2	2	2	2
Arrival type, AT	3	3	3	3	3	3	3	3	3	3	3	3
Approach pedestrian volume (p/h)	50			50			50			50		
Approach bicycle volume (bic/h)	0			0			0			0		
Left/right parking (Y or N)	N	/	N	N	/	N	N	/	N	N	/	N

Signal Phasing Plan

L: LT T: TH R: RT P: Peds

	Phase 1	Phase 2	Phase 3	Phase 4	Phase 5	Phase 6	Phase 7	Phase 8
EB	L		TR					
WB	L	LTR	TR					
NB				L	LTR	TR		
SB				L		TR		
Green (s)	8	4	50	12	5	12		
Yellow + All red (s)	3	3	3	3	3	3		

Cycle (s) 109 Lost time per cycle (s) 12 Critical v/c Ratio .67

Intersection Performance

	EB			WB			NB			SB		
Lane group configuration	L	T	R	L	T	R	L	TR		L	T	R
No. of lanes	1	2	1	1	1	1	1	1		1	1	1
Flow rate (veh/h)	65	823	35	95	755	23	91	153		59	89	28
Capacity (veh/h)	122	1522	638	228	912	732	325	312		195	205	134
Adjusted saturation flow (veh/h)	1656	3319	1390	1656	1743	1400	1770	1702		1770	1863	1220
v/c ratio	.537	.54	.055	.415	.829	.031	.281	.491		.301	.435	.21
g/C ratio	.073	.459	.459	.138	.523	.523	.183	.183		.11	.11	.11
Average back of queue (veh)	16.2	97.2	151.3	36.2	61.7	177.7	60.9	44.3		35.8	31.7	27.4
Uniform delay (s)	48.7	21.2	16.4	43	21.9	12.6	38.3	39.9		44.6	45.3	44.2
Incremental delay (s)	4.7	.4	0	.5	6.9	0	0	1.1		0	.8	0
Initial queue delay (s)	0	0	0	0	0	0	0	0		0	0	0
Delay (s)	53.4	21.6	16.4	43.5	28.7	12.6	38.3	41.1		44.6	46.1	44.2
LOS	D	C	B	D	C	B	D	D		D	D	D
Approach delay (s)/LOS	23.7	/	C	29.9	/	C	40	/	D	45.3	/	D
Intersection delay (s)/ LOS	29.7			/			C					

©Catalina Engineering, Inc.

HCS2000 - Graphical Output

File

Delay(s) and LOS by Lane

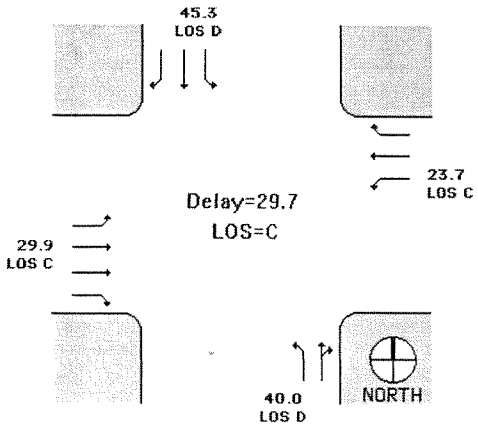

Hourly Movement Volume (veh/h)

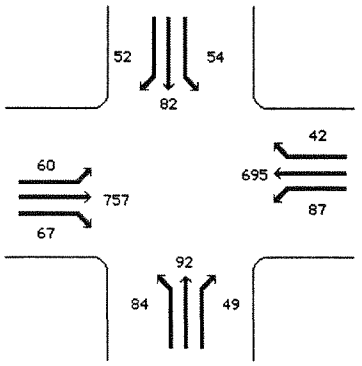

Chapter 16 - Signalized Intersections - Summary of Analysis

Analyst	ANALYST
Agency	OMNI-MEANS
Date	12/10/02
Period	PM PEAK
EW Street	KETTLEMEN LN.
NS Street	S. MILLS AVE.

Approach	Delay	LOS
EB approach	23.7 s	C
WB approach	29.9 s	C
NB approach	40.0 s	D
SB approach	45.3 s	D

-Future Base LOS Calculations-

CHAPTER 17 - TWSC - UNSIGNALIZED INTERSECTIONS WORKSHEET

Analysis Summary

General Information			Site Information		
Analyst	PJG		Jurisdiction/Date	CITY OF LODI	2/12/03
Agency or Company	OMNI-MEANS		Major Street	LOWER SACRAMENTO RD.	
Analysis Period/Year	AM PEAK	2002	Minor Street	TAYLOR ROA	
Comment	E+APP				

Input Data

Lane Configuration	SB			NB			EB			WB		
Lane 1 (curb)		TR			T			LR				
Lane 2		T			T							
Lane 3					L							
	SB			NB			EB			WB		
Movement	1 (LT)	2 (TH)	3 (RT)	4 (LT)	5 (TH)	6 (RT)	7 (LT)	8 (TH)	9 (RT)	10 (LT)	11 (TH)	12 (RT)
Volume (veh/h)		595	4	3	415		3		17			
PHF	.9	.9	.9	0	.9	.9	.9	.9	.9	.9	.9	.9
Proportion of heavy vehicles, HV	3	3	3	3	3	3	3	3	3	3	3	3
Flow rate		661	4	0	461		3		19			
Flare storage (# of vehs)									3			0
Median storage (# of vehs)							0			0		

Signal upstream of Movement 2 _____ ft Movement 5 _____ ft

Length of study period (h) 1

Output Data

	Lane	Movement	Flow Rate (veh/h)	Capacity (veh/h)	v/c	Queue Length (veh)	Control Delay (s)	LOS	Approach Delay and LOS
EB	1	LR	20	660	.03	<1	10.6	B	10.6
	2								
	3								B
WB	1								
	2								
	3								
		1							
		4	0	913	0	0	0		

©Catalina Engineering, Inc.

HCS2000 - Graphical Output

File

Delay(s) and LOS by Lane

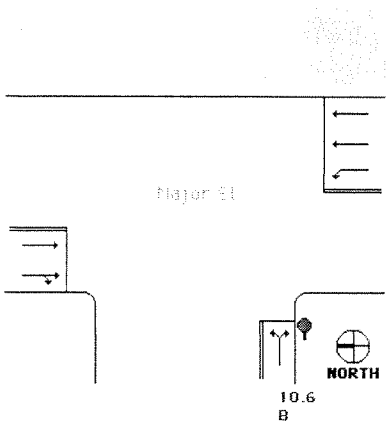

Hourly Movement Volume (veh/h)

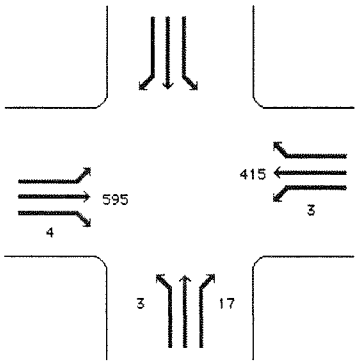

Chapter 17 - TWSC - Summary of Analysis

Analyst	PJG
Agency	OMNI-MEANS
Date	2/12/03
Period	AM PEAK
Major St.	LOWER SACRAMENTO RD.
Minor St.	TAYLOR ROAD

Approach	Delay	LOS
Minor St. (EB)	10.6 s	B
Minor St. (WB)	s	
Major LT (SB)	s	
Major LT (NB)	0 s	

CHAPTER 17 - TWSC - UNSIGNALIZED INTERSECTIONS WORKSHEET

Analysis Summary

General Information			Site Information		
Analyst	PJG		Jurisdiction/Date	CITY OF LODI	2/12/03
Agency or Company	OMNI-MEANS		Major Street	LOWER SACRAMENTO RD.	
Analysis Period/Year	PM PEAK	2002	Minor Street	TAYLOR ROA	
Comment	E+APP				

Input Data

Lane Configuration	SB			NB			EB			WB		
Lane 1 (curb)		TR			T			LR				
Lane 2		T			T							
Lane 3					L							
	SB			NB			EB			WB		
Movement	1 (LT)	2 (TH)	3 (RT)	4 (LT)	5 (TH)	6 (RT)	7 (LT)	8 (TH)	9 (RT)	10 (LT)	11 (TH)	12 (RT)
Volume (veh/h)		573	15	13	835		5		7			
PHF	.9	.9	.9	0	.9	.9	.9	.9	.9	.9	.9	.9
Proportion of heavy vehicles, HV	3	3	3	3	3	3	3	3	3	3	3	3
Flow rate		637	17	0	928		6		8			
Flare storage (# of vehs)									3			0
Median storage (# of vehs)							0			0		

Signal upstream of Movement 2 _____ ft Movement 5 _____ ft

Length of study period (h) 1

Output Data

	Lane	Movement	Flow Rate (veh/h)	Capacity (veh/h)	v/c	Queue Length (veh)	Control Delay (s)	LOS	Approach Delay and LOS
EB	1	LR	12	666	.018	<1	10.5	B	10.5
	2								
	3								B
WB	1								
	2								
	3								
		1							
		4	0	923	0	0	0		

©Catalina Engineering, Inc.

HCS2K 2000 - Graphical Output

File

Delay(s) and LOS by Lane

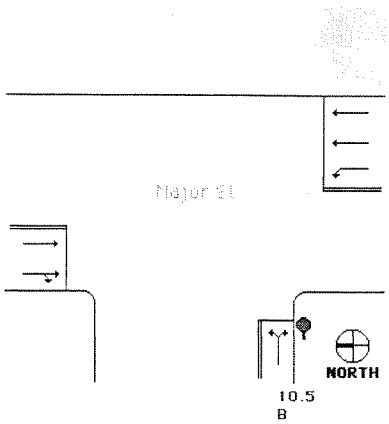

Hourly Movement Volume (veh/h)

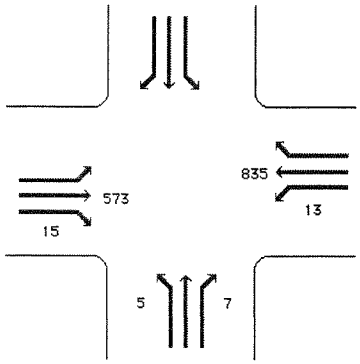

Chapter 17 - TWSC - Summary of Analysis

Analyst	PJG
Agency	OMNI-MEANS
Date	2/12/03
Period	PM PEAK
Major St.	LOWER SACRAMENTO RD.
Minor St.	TAYLOR ROAD

Approach	Delay	LOS
Minor St. (EB)	10.5 s	B
Minor St. (WB)	s	
Major LT (SB)	s	
Major LT (NB)	0 s	

CHAPTER 16 - OPERATIONAL ANALYSIS - SUMMARY WORKSHEET

General Information

Analyst	ANALYST
Agency or Company	OMNI-MEANS
Analysis Period/Year	AM PEAK 2002
Comment	E+APP

Site Information

Jurisdiction/Date	CITY OF LODI 2/12/03
EB/WB Street	SUNSET SAF
NB/SB Street	LOWER SACR

Intersection Data

Area type Other Analysis period 1 h Signal type Actuated-Field % Back of queue 95

	EB			WB			NB			SB		
	LT	TH	RT	LT	TH	RT	LT	TH	RT	LT	TH	RT
Volume (veh/h)				19		27		383	16	53	559	
RTOR volume (veh/h)						0			0			0
Peak-hour factor				.92		.92		.92	.92	.92	.92	
Heavy vehicles (%)				2		2		2	2	2	2	
Start-up lost time, l_1 (s)				2		2		2	2	2	2	
Extension of effective green, e (s)				2		2		2	2	2	2	
Arrival type, AT				3		3		3	3	3	3	
Approach pedestrian volume (p/h)				50			50			50		
Approach bicycle volume (bic/h)				0			0			0		
Left/right parking (Y or N)		/		N	/	N	N	/	N	N	/	N

Signal Phasing Plan

L: LT T: TH R: RT P: Peds

	Phase 1	Phase 2	Phase 3	Phase 4	Phase 5	Phase 6	Phase 7	Phase 8
EB								
WB	LR							
NB			TR					
SB		LT	T					
Green (s)	25	17	57					
Yellow + All red (s)	3	3	3					

Cycle (s) 108 Lost time per cycle (s) 6 Critical v/c Ratio .203

Intersection Performance

	EB			WB			NB			SB		
Lane group configuration				L		R		T	R	L	T	
No. of lanes				1		1		2	1	1	2	
Flow rate (veh/h)				21		29		416	17	58	608	
Capacity (veh/h)				410		340		1872	829	279	2519	
Adjusted saturation flow (veh/h)				1770		1469		3547	1571	1770	3533	
v/c ratio				.05		.086		.222	.021	.207	.241	
g/C ratio				.231		.231		.528	.528	.157	.713	
Average back of queue (veh)				97.8		78.4		185.5	203.2	56.8	242.3	
Uniform delay (s)				32.3		32.5		13.6	12.2	39.6	5.4	
Incremental delay (s)				0		0		0	0	0	0	
Initial queue delay (s)				0		0		0	0	0	0	
Delay (s)				32.3		32.5		13.6	12.2	39.6	5.4	
LOS				C		C		B	B	D	A	
Approach delay (s)/LOS		/		32.4	/	C	13.6	/	B	8.3	/	A
Intersection delay (s)/ LOS			11.4			/				B		

©Catalina Engineering, Inc.

HCAP 2000 - Graphical Output

File

Delay(s) and LOS by Lane

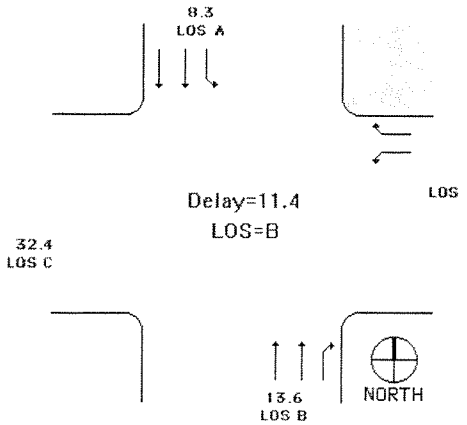

Hourly Movement Volume (veh/h)

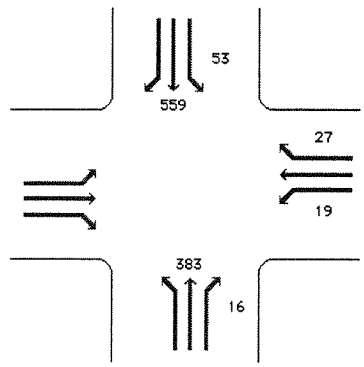

Chapter 16 - Signalized Intersections - Summary of Analysis

Analyst	ANALYST
Agency	OMNI-MEANS
Date	2/12/03
Period	AM PEAK
EW Street	SUNSET SAFEWAY DRVWY.
NS Street	LOWER SACRAMENTO RD.

Approach	Delay	LOS
EB approach	s	
WB approach	32.4 s	C
NB approach	13.6 s	B
SB approach	8.3 s	A

CHAPTER 16 - OPERATIONAL ANALYSIS - SUMMARY WORKSHEET

General Information

Analyst	ANALYST
Agency or Company	OMNI-MEANS
Analysis Period/Year	PM PEAK 2002
Comment	E+APP

Site Information

Jurisdiction/Date	CITY OF LODI 2/12/03
EB/WB Street	SUNSET SAF
NB/SB Street	LOWER SACR

Intersection Data

Area type Other Analysis period 1 h Signal type Actuated-Field % Back of queue 95

	EB			WB			NB			SB		
	LT	TH	RT	LT	TH	RT	LT	TH	RT	LT	TH	RT
Volume (veh/h)				41		109		735	66	89	569	
RTOR volume (veh/h)						0			0			0
Peak-hour factor				.92		.92		.92	.92	.92	.92	
Heavy vehicles (%)				2		2		2	2	2	2	
Start-up lost time, l_1 (s)				2		2		2	2	2	2	
Extension of effective green, e (s)				2		2		2	2	2	2	
Arrival type, AT				3		3		3	3	3	3	
Approach pedestrian volume (p/h)				50			50			50		
Approach bicycle volume (bic/h)				0			0			0		
Left/right parking (Y or N)		/		N	/	N	N	/	N	N	/	N

Signal Phasing Plan

L: LT T: TH R: RT P: Peds

	Phase 1	Phase 2	Phase 3	Phase 4	Phase 5	Phase 6	Phase 7	Phase 8
EB								
WB	LR							
NB			TR					
SB		LT	T					
Green (s)	25	17	57					
Yellow + All red (s)	3	3	3					

Cycle (s) 108 Lost time per cycle (s) 9 Critical v/c Ratio .393

Intersection Performance

	EB			WB			NB			SB		
Lane group configuration				L		R		T	R	L	T	
No. of lanes				1		1		2	1	1	2	
Flow rate (veh/h)				45		118		799	72	97	618	
Capacity (veh/h)				410		340		1872	829	279	2519	
Adjusted saturation flow (veh/h)				1770		1469		3547	1571	1770	3533	
v/c ratio				.109		.348		.427	.087	.347	.246	
g/C ratio				.231		.231		.528	.528	.157	.713	
Average back of queue (veh)				92.4		58.6		142	190.5	48.2	241.1	
Uniform delay (s)				32.7		34.7		15.5	12.6	40.6	5.4	
Incremental delay (s)				0		0		.1	0	0	0	
Initial queue delay (s)				0		0		0	0	0	0	
Delay (s)				32.7		34.7		15.6	12.6	40.6	5.4	
LOS				C		C		B	B	D	A	
Approach delay (s)/LOS		/		34.2	/	C	15.4	/	B	10.1	/	B
Intersection delay (s)/ LOS			15			/				B		

©Catalina Engineering, Inc.

HCAP 2000 - Graphical Output

File

Delay(s) and LOS by Lane

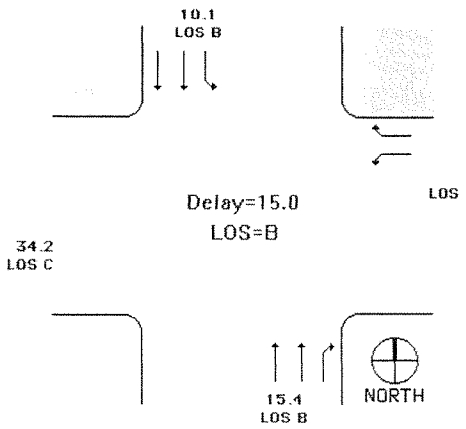

Hourly Movement Volume (veh/h)

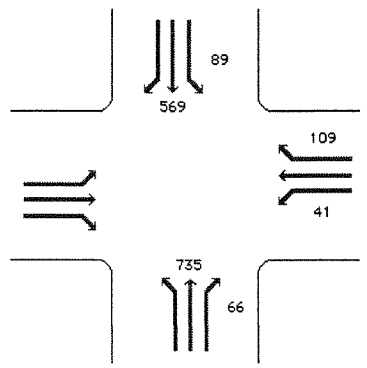

Chapter 16 - Signalized Intersections - Summary of Analysis

Analyst	ANALYST
Agency	OMNI-MEANS
Date	2/12/03
Period	PM PEAK
EW Street	SUNSET SAFEWAY DRVWY.
NS Street	LOWER SACRAMENTO RD.

Approach	Delay	LOS
EB approach	s	
WB approach	34.2 s	C
NB approach	15.4 s	B
SB approach	10.1 s	B

CHAPTER 16 - OPERATIONAL ANALYSIS - SUMMARY WORKSHEET

General Information

Analyst	ANALYST
Agency or Company	OMNI-MEANS
Analysis Period/Year	AM PEAK 2002
Comment	E+APP

Site Information

Jurisdiction/Date	CITY OF LODI 2/12/03
EB/WB Street	KETTLEMEN
NB/SB Street	LOWER SACR

Intersection Data

Area type Other Analysis period 1 h Signal type Actuated-Field % Back of queue 95

	EB			WB			NB			SB		
	LT	TH	RT	LT	TH	RT	LT	TH	RT	LT	TH	RT
Volume (veh/h)	77	344	12	185	378	99	46	175	165	175	320	95
RTOR volume (veh/h)			0			84			91			0
Peak-hour factor	.92	.92	.92	.92	.92	.92	.92	.92	.92	.92	.92	.92
Heavy vehicles (%)	9	9	9	9	9	9	2	2	2	2	2	2
Start-up lost time, l_1 (s)	2	2	2	2	2	2	2	2	2	2	2	2
Extension of effective green, e (s)	2	2	2	2	2	2	2	2	2	2	2	2
Arrival type, AT	3	3	3	3	3	3	3	3	3	3	3	3
Approach pedestrian volume (p/h)	50			50			50			50		
Approach bicycle volume (bic/h)	0			0			0			0		
Left/right parking (Y or N)	N	/	N	N	/	N	N	/	N	N	/	N

Signal Phasing Plan

L: LT T: TH R: RT P: Peds

	Phase 1	Phase 2	Phase 3	Phase 4	Phase 5	Phase 6	Phase 7	Phase 8
EB	L		TR					
WB	L	LTR	TR					
NB				L		TR		
SB				L	LTR	TR		
Green (s)	17	5	24	12	5	19		
Yellow + All red (s)	3	3	3	3	3	3		

Cycle (s) 100 Lost time per cycle (s) 12 Critical v/c Ratio .374

Intersection Performance

	EB			WB			NB			SB		
Lane group configuration	L	TR		L	T	R	L	T	R	L	TR	
No. of lanes	2	2		2	2	1	2	3	1	2	2	
Flow rate (veh/h)	84	387		201	411	16	50	190	80	190	451	
Capacity (veh/h)	547	788		804	1062	448	412	964	277	687	909	
Adjusted saturation flow (veh/h)	3216	3282		3216	3319	1401	3437	5074	1460	3437	3368	
v/c ratio	.153	.491		.25	.387	.036	.121	.197	.29	.277	.496	
g/C ratio	.17	.24		.25	.32	.32	.12	.19	.19	.2	.27	
Average back of queue (veh)	58.9	55.1		77.7	86.1	108.3	46	66.1	51.3	64.5	63	
Uniform delay (s)	35.4	32.7		30	26.4	23.4	39.3	34.1	34.7	33.9	30.8	
Incremental delay (s)	0	.5		0	0	0	0	0	0	0	.4	
Initial queue delay (s)	0	0		0	0	0	0	0	0	0	0	
Delay (s)	35.4	33.2		30	26.4	23.4	39.3	34.1	34.7	33.9	31.2	
LOS	D	C		C	C	C	D	C	C	C	C	
Approach delay (s)/LOS	33.6	/	C	27.5	/	C	35.1	/	D	32	/	C
Intersection delay (s)/ LOS	31.5			/			C					

©Catalina Engineering, Inc.

HICAP 2000 - Graphical Output

File

Delay(s) and LOS by Lane

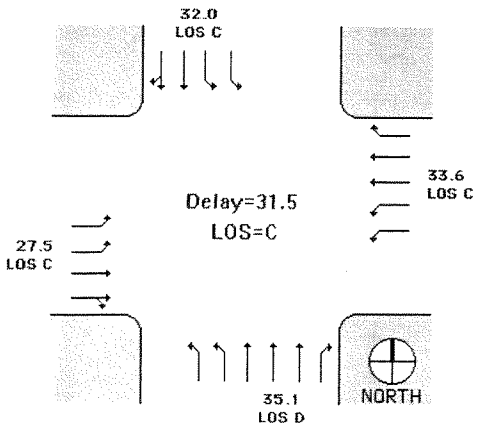

Hourly Movement Volume (veh/h)

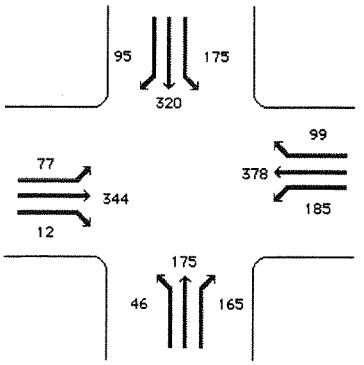

Chapter 16 - Signalized Intersections - Summary of Analysis

Analyst	ANALYST
Agency	OMNI-MEANS
Date	2/12/03
Period	AM PEAK
EW Street	KETTLEMEN LN.
NS Street	LOWER SACRAMENTO RD.

Approach	Delay	LOS
EB approach	33.6 s	C
WB approach	27.5 s	C
NB approach	35.1 s	D
SB approach	32.0 s	C

CHAPTER 16 - OPERATIONAL ANALYSIS - SUMMARY WORKSHEET

General Information

Analyst: ANALYST
Agency or Company: OMNI-MEANS
Analysis Period/Year: PM PEAK 2002
Comment: E+APP

Site Information

Jurisdiction/Date: CITY OF LODI 2/12/03
EB/WB Street: KETTLEMEN
NB/SB Street: LOWER SACR

Intersection Data

Area type: Other Analysis period: 1 h Signal type: Actuated-Field % Back of queue: 95

	EB			WB			NB			SB		
	LT	TH	RT	LT	TH	RT	LT	TH	RT	LT	TH	RT
Volume (veh/h)	122	486	126	134	288	282	62	419	142	291	361	85
RTOR volume (veh/h)			0			144			64			0
Peak-hour factor	.92	.92	.92	.92	.92	.92	.92	.92	.92	.92	.92	.92
Heavy vehicles (%)	9	9	9	9	9	9	2	2	2	2	2	2
Start-up lost time, l_1 (s)	2	2	2	2	2	2	2	2	2	2	2	2
Extension of effective green, e (s)	2	2	2	2	2	2	2	2	2	2	2	2
Arrival type, AT	3	3	3	3	3	3	3	3	3	3	3	3
Approach pedestrian volume (p/h)	50			50			50			50		
Approach bicycle volume (bic/h)	0			0			0			0		
Left/right parking (Y or N)	N	/	N	N	/	N	N	/	N	N	/	N

Signal Phasing Plan

L: LT T: TH R: RT P: Peds

	Phase 1	Phase 2	Phase 3	Phase 4	Phase 5	Phase 6	Phase 7	Phase 8
EB	L	LTR	TR					
WB	L		TR					
NB				L		TR		
SB				L	LTR	TR		
Green (s)	17	3	27	12	5	18		
Yellow + All red (s)	3	3	3	3	3	3		

Cycle (s): 100 Lost time per cycle (s): 12 Critical v/c Ratio: .496

Intersection Performance

	EB			WB			NB			SB		
Lane group configuration	L	TR		L	T	R	L	T	R	L	TR	
No. of lanes	2	2		2	2	1	2	3	1	2	2	
Flow rate (veh/h)	133	665		146	313	150	67	455	85	316	485	
Capacity (veh/h)	740	1047		547	896	375	412	913	263	687	882	
Adjusted saturation flow (veh/h)	3216	3174		3216	3319	1388	3437	5074	1460	3437	3394	
v/c ratio	.179	.635		.266	.349	.4	.163	.499	.323	.46	.549	
g/C ratio	.23	.33		.17	.27	.27	.12	.18	.18	.2	.26	
Average back of queue (veh)	77.4	56.5		52	76.6	59.9	44	42.3	46.7	50.6	56.1	
Uniform delay (s)	30.9	28.4		36.1	29.4	29.9	39.5	36.9	35.7	35.2	31.9	
Incremental delay (s)	0	1.3		0	0	.2	0	.4	0	.4	.7	
Initial queue delay (s)	0	0		0	0	0	0	0	0	0	0	
Delay (s)	30.9	29.7		36.1	29.4	30.1	39.5	37.4	35.7	35.6	32.7	
LOS	C	C		D	C	C	D	D	D	D	C	
Approach delay (s)/LOS	29.9	/	C	31.2	/	C	37.4	/	D	33.8	/	C
Intersection delay (s)/ LOS	32.9				/					C		

©Catalina Engineering, Inc.

HCAP 2000 - Graphical Output

File

Delay(s) and LOS by Lane

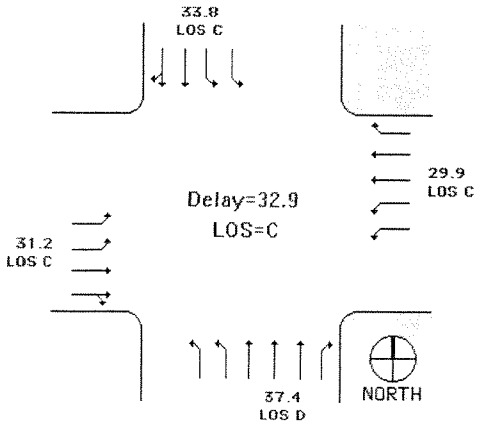

Hourly Movement Volume (veh/h)

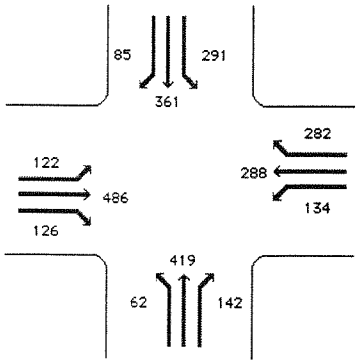

Chapter 16 - Signalized Intersections - Summary of Analysis

Analyst	ANALYST
Agency	OMNI-MEANS
Date	2/12/03
Period	PM PEAK
EW Street	KETTLEMEN LN.
NS Street	LOWER SACRAMENTO RD.

Approach	Delay	LOS
EB approach	29.9 s	C
WB approach	31.2 s	C
NB approach	37.4 s	D
SB approach	33.8 s	C

CHAPTER 16 - OPERATIONAL ANALYSIS - SUMMARY WORKSHEET

General Information

Analyst	PJG		
Agency or Company	OMNI-MEANS		
Analysis Period/Year	AM PEAK	2002	
Comment	E+APP		

Site Information

Jurisdiction/Date	CITY OF LODI	2/13/03
EB/WB Street	KETTLEMEN	
NB/SB Street	TIENDA DR.	

Intersection Data

Area type: Other Analysis period: 1 h Signal type: Actuated-Field % Back of queue: 95

	EB			WB			NB			SB		
	LT	TH	RT	LT	TH	RT	LT	TH	RT	LT	TH	RT
Volume (veh/h)	17	644	25	105	619	32	19	12	69	49	33	29
RTOR volume (veh/h)			0			0			0			13
Peak-hour factor	.92	.92	.92	.92	.92	.92	.92	.92	.92	.92	.92	.92
Heavy vehicles (%)	9	9	9	9	9	9	2	2	2	2	2	2
Start-up lost time, l_1 (s)	2	2	2	2	2	2	2	2	2	2	2	2
Extension of effective green, e (s)	2	2	2	2	2	2	2	2	2	2	2	2
Arrival type, AT	3	3	3	3	3	3	3	3	3	3	3	3
Approach pedestrian volume (p/h)	50			50			50			50		
Approach bicycle volume (bic/h)	0			0			0			0		
Left/right parking (Y or N)	N	/	N	N	/	N	N	/	N	N	/	N

Signal Phasing Plan

L: LT T: TH R: RT P: Peds

	Phase 1	Phase 2	Phase 3	Phase 4	Phase 5	Phase 6	Phase 7	Phase 8
EB	L		TR					
WB	L	LTR	TR					
NB				LTR				
SB					LTR			
Green (s)	12	5	49	12	12			
Yellow + All red (s)	3	3	3	3	3			

Cycle (s): 105 Lost time per cycle (s): 12 Critical v/c Ratio: .36

Intersection Performance

	EB			WB			NB			SB		
Lane group configuration	L	TR		L	TR		L	TR		L	LT	R
No. of lanes	1	3		2	2		1	1		1	1	1
Flow rate (veh/h)	18	727		114	708		21	88		36	53	17
Capacity (veh/h)	189	2193		613	1777		202	164		202	201	156
Adjusted saturation flow (veh/h)	1656	4700		3216	3274		1770	1432		1770	1763	1368
v/c ratio	.098	.332		.186	.398		.102	.538		.176	.265	.111
g/C ratio	.114	.467		.19	.543		.114	.114		.114	.114	.114
Average back of queue (veh)	43.2	127		63.8	140.2		46	21.6		42.6	38.5	35.2
Uniform delay (s)	41.7	17.7		35.7	14		41.7	43.9		42	42.5	41.7
Incremental delay (s)	0	0		0	0		0	3.6		0	0	0
Initial queue delay (s)	0	0		0	0		0	0		0	0	0
Delay (s)	41.7	17.7		35.7	14		41.7	47.4		42	42.5	41.7
LOS	D	B		D	B		D	D		D	D	D
Approach delay (s)/LOS	18.3	/	B	17	/	B	46.3	/	D	42.2	/	D
Intersection delay (s)/ LOS	20.8				/					C		

©Catalina Engineering, Inc.

HiCAP 2000 - Graphical Output

File

Delay(s) and LOS by Lane

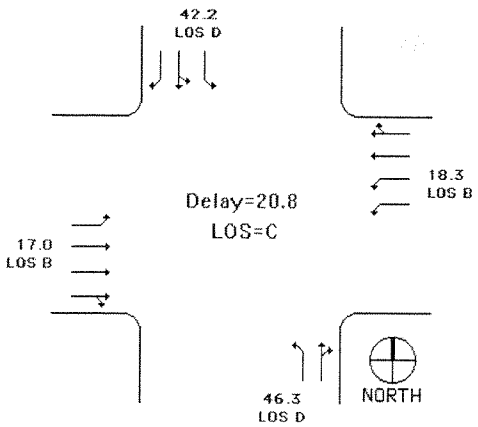

Hourly Movement Volume (veh/h)

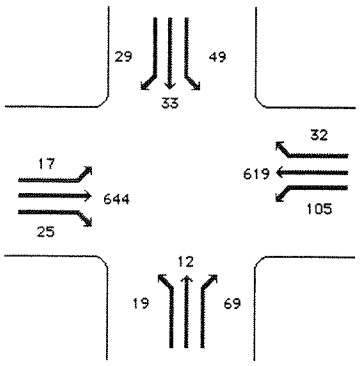

Chapter 16 - Signalized Intersections - Summary of Analysis

Analyst	PJG
Agency	OMNI-MEANS
Date	2/13/03
Period	AM PEAK
EW Street	KETTLEMEN LN.
NS Street	TIENDA DR.

Approach	Delay	LOS
EB approach	18.3 s	B
WB approach	17.0 s	B
NB approach	46.3 s	D
SB approach	42.2 s	D

CHAPTER 16 - OPERATIONAL ANALYSIS - SUMMARY WORKSHEET

General Information

Analyst: ANALYST
Agency or Company: OMNI-MEANS
Analysis Period/Year: PM PEAK 2002
Comment: E+APP

Site Information

Jurisdiction/Date: CITY OF LODI 2/13/03
EB/WB Street: KETTLEMEN
NB/SB Street: TIENDA DR.

Intersection Data

Area type: Other Analysis period: 1 h Signal type: Actuated-Field % Back of queue: 95

	EB			WB			NB			SB		
	LT	TH	RT	LT	TH	RT	LT	TH	RT	LT	TH	RT
Volume (veh/h)	116	636	60	278	450	142	94	62	267	127	113	59
RTOR volume (veh/h)			0			0			0			30
Peak-hour factor	.92	.92	.92	.92	.92	.92	.92	.92	.92	.92	.92	.92
Heavy vehicles (%)	9	9	9	9	9	9	2	2	2	2	2	2
Start-up lost time, l_1 (s)	2	2	2	2	2	2	2	2	2	2	2	2
Extension of effective green, e (s)	2	2	2	2	2	2	2	2	2	2	2	2
Arrival type, AT	3	3	3	3	3	3	3	3	3	3	3	3
Approach pedestrian volume (p/h)	50			50			50			50		
Approach bicycle volume (bic/h)	0			0			0			0		
Left/right parking (Y or N)	N	/	N	N	/	N	N	/	N	N	/	N

Signal Phasing Plan

L: LT T: TH R: RT P: Peds

	Phase 1	Phase 2	Phase 3	Phase 4	Phase 5	Phase 6	Phase 7	Phase 8
EB	L		TR					
WB	L	LTR	TR					
NB				LTR				
SB					LTR			
Green (s)	12	4	30	32	12			
Yellow + All red (s)	3	3	3	3	3			

Cycle (s): 105 Lost time per cycle (s): 12 Critical v/c Ratio: .681

Intersection Performance

	EB			WB			NB			SB		
Lane group configuration	L	TR		L	TR		L	TR		L	LT	R
No. of lanes	1	3		2	2		1	1		1	1	1
Flow rate (veh/h)	126	757		302	643		102	358		92	168	32
Capacity (veh/h)	189	1326		582	1104		539	475		202	208	156
Adjusted saturation flow (veh/h)	1656	4639		3216	3133		1770	1558		1770	1823	1368
v/c ratio	.666	.571		.519	.583		.189	.753		.457	.808	.202
g/C ratio	.114	.286		.181	.352		.305	.305		.114	.114	.114
Average back of queue (veh)	19.9	54.3		39.3	65.9		111.6	40.2		30.2	16	32.1
Uniform delay (s)	44.6	32		38.9	27.7		26.9	32.9		43.5	45.4	42.2
Incremental delay (s)	9	.6		.8	.8		0	7		1.1	23.9	0
Initial queue delay (s)	0	0		0	0		0	0		0	0	0
Delay (s)	53.5	32.6		39.7	28.5		26.9	39.9		44.6	69.2	42.2
LOS	D	C		D	C		C	D		D	E	D
Approach delay (s)/LOS	35.6	/	D	32.1	/	C	37	/	D	58.5	/	E
Intersection delay (s)/ LOS	37.2					/				D		

©Catalina Engineering, Inc.

HCS2000 - Graphical Output

File

Delay(s) and LOS by Lane

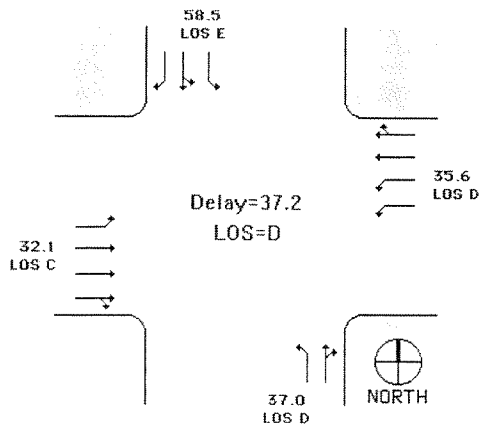

Hourly Movement Volume (veh/h)

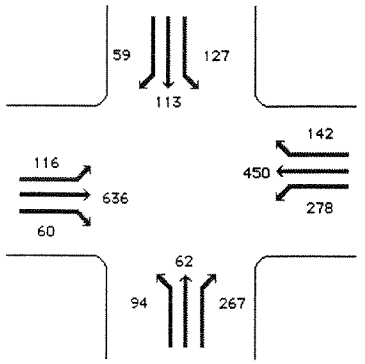

Chapter 16 - Signalized Intersections - Summary of Analysis

Analyst	ANALYST
Agency	OMNI-MEANS
Date	2/13/03
Period	PM PEAK
EW Street	KETTLEMEN LN.
NS Street	TIENDA DR.

Approach	Delay		LOS
EB approach	35.6	s	D
WB approach	32.1	s	C
NB approach	37.0	s	D
SB approach	58.5	s	E

CHAPTER 16 - OPERATIONAL ANALYSIS - SUMMARY WORKSHEET

General Information

Analyst	ANALYST
Agency or Company	OMNI-MEANS
Analysis Period/Year	AM PEAK 2002
Comment	E+APP

Site Information

Jurisdiction/Date	CITY OF LODI 2/13/03
EB/WB Street	KETTLEMEN
NB/SB Street	S. MILLS A

Intersection Data

Area type Other Analysis period 1 h Signal type Actuated-Field % Back of queue 95

	EB			WB			NB			SB		
	LT	TH	RT	LT	TH	RT	LT	TH	RT	LT	TH	RT
Volume (veh/h)	43	589	51	37	538	75	135	145	44	94	62	38
RTOR volume (veh/h)			40			30			0			15
Peak-hour factor	.92	.92	.92	.92	.92	.92	.92	.92	.92	.92	.92	.92
Heavy vehicles (%)	9	9	9	9	9	9	2	2	2	2	2	2
Start-up lost time, l_1 (s)	2	2	2	2	2	2	2	2	2	2	2	2
Extension of effective green, e (s)	2	2	2	2	2	2	2	2	2	2	2	2
Arrival type, AT	3	3	3	3	3	3	3	3	3	3	3	3
Approach pedestrian volume (p/h)	50			50			50			50		
Approach bicycle volume (bic/h)	0			0			0			0		
Left/right parking (Y or N)	N	/	N	N	/	N	N	/	N	N	/	N

Signal Phasing Plan

L: LT T: TH R: RT P: Peds

	Phase 1	Phase 2	Phase 3	Phase 4	Phase 5	Phase 6	Phase 7	Phase 8
EB	L		TR					
WB	L	LTR	TR					
NB				L	LTR	TR		
SB				L		TR		
Green (s)	12	5	49	12	5	15		
Yellow + All red (s)	3	3	3	3	3	3		

Cycle (s) 116 Lost time per cycle (s) 12 Critical v/c Ratio .437

Intersection Performance

	EB			WB			NB			SB		
Lane group configuration	L	T	R	L	T	R	L	TR		L	T	R
No. of lanes	1	2	1	1	2	1	1	1		1	1	1
Flow rate (veh/h)	47	640	12	40	585	49	147	205		102	67	25
Capacity (veh/h)	171	1402	584	286	1631	686	305	347		183	241	180
Adjusted saturation flow (veh/h)	1656	3319	1383	1656	3319	1395	1770	1752		1770	1863	1389
v/c ratio	.273	.457	.02	.141	.359	.071	.481	.591		.558	.28	.139
g/C ratio	.103	.422	.422	.172	.491	.491	.172	.198		.103	.129	.129
Average back of queue (veh)	32.6	103.1	143.3	62.5	137	160.1	44.2	42.1		23.7	45.5	39.4
Uniform delay (s)	48	24	19.5	40.7	18.2	15.5	43.3	42.2		49.5	45.6	44.8
Incremental delay (s)	0	.2	0	0	0	0	1	2.7		3.8	0	0
Initial queue delay (s)	0	0	0	0	0	0	0	0		0	0	0
Delay (s)	48	24.1	19.5	40.7	18.2	15.5	44.4	44.9		53.3	45.6	44.8
LOS	D	C	B	D	B	B	D	D		D	D	D
Approach delay (s)/LOS	25.7	/	C	19.4	/	B	44.7	/	D	49.6	/	D
Intersection delay (s)/ LOS	29.4			/						C		

©Catalina Engineering, Inc.

HICAP 2000 - Graphical Output

File

Delay(s) and LOS by Lane

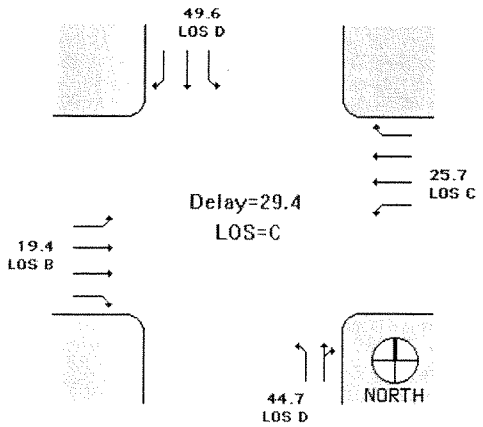

Hourly Movement Volume (veh/h)

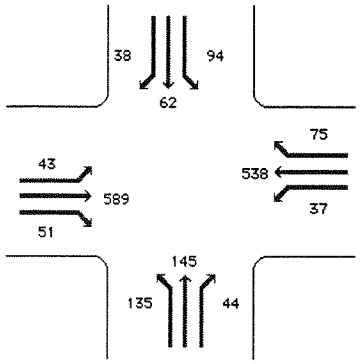

Chapter 16 - Signalized Intersections - Summary of Analysis

Analyst	ANALYST
Agency	OMNI-MEANS
Date	2/13/03
Period	AM PEAK
EW Street	KETTLEMEN LN.
NS Street	S. MILLS AVE.

Approach	Delay	LOS
EB approach	25.7 s	C
WB approach	19.4 s	B
NB approach	44.7 s	D
SB approach	49.6 s	D

CHAPTER 16 - OPERATIONAL ANALYSIS - SUMMARY WORKSHEET

General Information

Analyst: ANALYST
Agency or Company: OMNI-MEANS
Analysis Period/Year: PM PEAK 2002
Comment: E+APP

Site Information

Jurisdiction/Date: CITY OF LODI 2/13/03
EB/WB Street: KETTLEMEN
NB/SB Street: S. MILLS A

Intersection Data

Area type: Other Analysis period: 1 h Signal type: Actuated-Field % Back of queue: 95

	EB			WB			NB			SB		
	LT	TH	RT	LT	TH	RT	LT	TH	RT	LT	TH	RT
Volume (veh/h)	73	828	67	87	750	59	84	101	49	93	103	82
RTOR volume (veh/h)			40			30			0			30
Peak-hour factor	.92	.92	.92	.92	.92	.92	.92	.92	.92	.92	.92	.92
Heavy vehicles (%)	9	9	9	9	9	9	2	2	2	2	2	2
Start-up lost time, l_1 (s)	2	2	2	2	2	2	2	2	2	2	2	2
Extension of effective green, e (s)	2	2	2	2	2	2	2	2	2	2	2	2
Arrival type, AT	3	3	3	3	3	3	3	3	3	3	3	3
Approach pedestrian volume (p/h)	50			50			50			50		
Approach bicycle volume (bic/h)	0			0			0			0		
Left/right parking (Y or N)	N	/	N	N	/	N	N	/	N	N	/	N

Signal Phasing Plan

L: LT T: TH R: RT P: Peds

	Phase 1	Phase 2	Phase 3	Phase 4	Phase 5	Phase 6	Phase 7	Phase 8
EB	L		TR					
WB	L	LTR	TR					
NB				L	LTR	TR		
SB				L		TR		
Green (s)	8	4	50	12	5	10		
Yellow + All red (s)	3	3	3	3	3	3		

Cycle (s): 107 Lost time per cycle (s): 12 Critical v/c Ratio: .542

Intersection Performance

	EB			WB			NB			SB		
Lane group configuration	L	T	R	L	T	R	L	TR		L	T	R
No. of lanes	1	2	1	1	2	1	1	1		1	1	1
Flow rate (veh/h)	79	900	29	95	815	32	91	163		101	112	57
Capacity (veh/h)	124	1551	650	232	1768	746	331	287		198	174	128
Adjusted saturation flow (veh/h)	1656	3319	1391	1656	3319	1401	1770	1706		1770	1863	1364
v/c ratio	.641	.58	.045	.407	.461	.042	.276	.568		.509	.643	.443
g/C ratio	.075	.467	.467	.14	.533	.533	.187	.168		.112	.093	.093
Average back of queue (veh)	13.8	92	155.7	37.2	127.2	179.2	62.3	35.9		27.5	19.2	19.5
Uniform delay (s)	48.1	20.8	15.5	41.9	15.5	12	37.3	40.9		44.7	46.8	45.9
Incremental delay (s)	11.2	.6	0	.4	.1	0	0	2.7		2.2	8.2	1.5
Initial queue delay (s)	0	0	0	0	0	0	0	0		0	0	0
Delay (s)	59.3	21.4	15.5	42.3	15.6	12	37.3	43.6		46.9	54.9	47.3
LOS	E	C	B	D	B	B	D	D		D	D	D
Approach delay (s)/LOS	24.2	/	C	18.2	/	B	41.3	/	D	50.3	/	D
Intersection delay (s)/ LOS	26.5			/						C		

©Catalina Engineering, Inc.

HiCAP 2000 - Graphical Output

File

Delay(s) and LOS by Lane

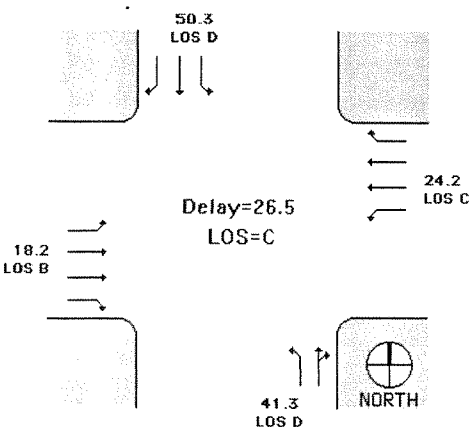

Hourly Movement Volume (veh/h)

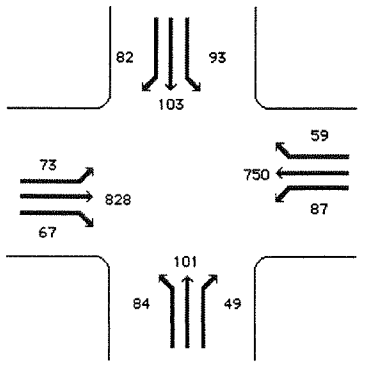

Chapter 16 - Signalized Intersections - Summary of Analysis

Analyst	ANALYST
Agency	OMNI-MEANS
Date	2/13/03
Period	PM PEAK
EW Street	KETTLEMEN LN.
NS Street	S. MILLS AVE.

Approach	Delay	LOS
EB approach	24.2 s	C
WB approach	18.2 s	B
NB approach	41.3 s	D
SB approach	50.3 s	D

-Future Base + Project LOS Calculations-

CHAPTER 17 - TWSC - UNSIGNALIZED INTERSECTIONS WORKSHEET

Analysis Summary

General Information		Site Information		
Analyst	PJG	Jurisdiction/Date	CITY OF LODI	2/12/03
Agency or Company	OMNI-MEANS	Major Street	LOWER SACRAMENTO RD.	
Analysis Period/Year	AM PEAK 2002	Minor Street	TAYLOR ROA	
Comment	E+APP+PRJ			

Input Data

Lane Configuration	SB	NB	EB	WB
Lane 1 (curb)	TR	T	R	
Lane 2	T	T		
Lane 3		L		

	SB			NB			EB			WB		
Movement	1 (LT)	2 (TH)	3 (RT)	4 (LT)	5 (TH)	6 (RT)	7 (LT)	8 (TH)	9 (RT)	10 (LT)	11 (TH)	12 (RT)
Volume (veh/h)		689	4	3	494				17			
PHF	.9	.9	.9	0	.9	.9	.9	.9	.9	.9	.9	.9
Proportion of heavy vehicles, HV	3	3	3	3	3	3	3	3	3	3	3	3
Flow rate		766	4	0	549				19			
Flare storage (# of vehs)									0			0
Median storage (# of vehs)							0			0		

Signal upstream of Movement 2 _____ ft Movement 5 _____ ft

Length of study period (h) 1

Output Data

	Lane	Movement	Flow Rate (veh/h)	Capacity (veh/h)	v/c	Queue Length (veh)	Control Delay (s)	LOS	Approach Delay and LOS
EB	1	R	17	610	.028	<1	11.1	B	11.1
	2								
	3								B
WB	1								
	2								
	3								
		1							
		4	0	834	0	0	0		

HiCAP 2000 ™
©Catalina Engineering, Inc.

HCAP 2000 - Graphical Output

File

Delay(s) and LOS by Lane

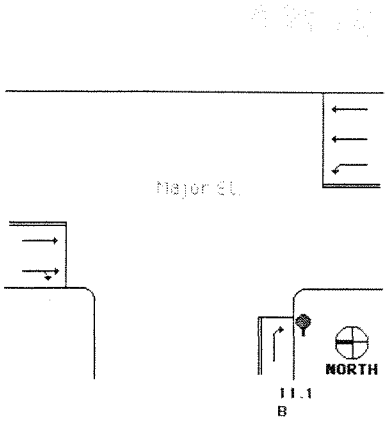

Hourly Movement Volume (veh/h)

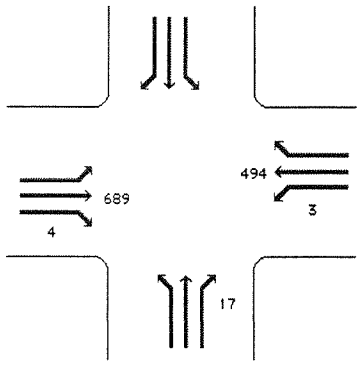

Chapter 17 - TWSC - Summary of Analysis

Analyst	PJG
Agency	OMNI-MEANS
Date	2/12/03
Period	AM PEAK
Major St.	LOWER SACRAMENTO RD.
Minor St.	TAYLOR ROAD

Approach	Delay	LOS
Minor St. (EB)	11.1 s	B
Minor St. (WB)	s	
Major LT (SB)	s	
Major LT (NB)	0 s	

CHAPTER 17 - TWSC - UNSIGNALIZED INTERSECTIONS WORKSHEET

Analysis Summary

General Information

Analyst	PJG		
Agency or Company	OMNI-MEANS		
Analysis Period/Year	PM PEAK	2002	
Comment	E+APP+PRJ		

Site Information

Jurisdiction/Date	CITY OF LODI	2/12/03
Major Street	LOWER SACRAMENTO RD.	
Minor Street	TAYLOR ROA	

Input Data

Lane Configuration	SB	NB	EB	WB
Lane 1 (curb)	TR	T	R	
Lane 2	T	T		
Lane 3		L		

	SB			NB			EB			WB		
Movement	1 (LT)	2 (TH)	3 (RT)	4 (LT)	5 (TH)	6 (RT)	7 (LT)	8 (TH)	9 (RT)	10 (LT)	11 (TH)	12 (RT)
Volume (veh/h)		739	15	13	1016				7			
PHF	.9	.9	.9	0	.9	.9	.9	.9	.9	.9	.9	.9
Proportion of heavy vehicles, HV	3	3	3	3	3	3	3	3	3	3	3	3
Flow rate		821	17	0	1129				8			
Flare storage (# of vehs)									0			0
Median storage (# of vehs)							0			0		

Signal upstream of Movement 2 _____ ft Movement 5 _____ ft

Length of study period (h) 1

Output Data

	Lane	Movement	Flow Rate (veh/h)	Capacity (veh/h)	v/c	Queue Length (veh)	Control Delay (s)	LOS	Approach Delay and LOS
EB	1	R	7	580	.012	<1	11.3	B	11.3
	2								
	3								B
WB	1								
	2								
	3								
		1							
		4	0	786	0	0	0		

©Catalina Engineering, Inc.

HCAP 2000 - Graphical Output

File

Delay(s) and LOS by Lane

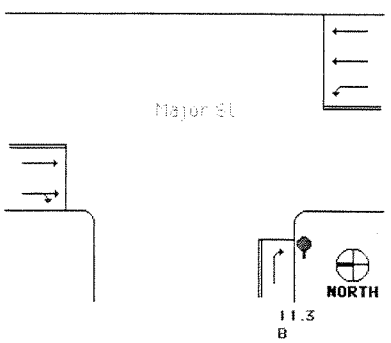

Hourly Movement Volume (veh/h)

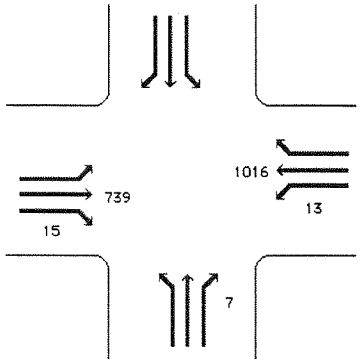

Chapter 17 - TWSC - Summary of Analysis

Analyst	PJG
Agency	OMNI-MEANS
Date	2/12/03
Period	PM PEAK
Major St.	LOWER SACRAMENTO RD.
Minor St.	TAYLOR ROAD

Approach	Delay	LOS
Minor St. (EB)	11.3 s	B
Minor St. (WB)	s	
Major LT (SB)	s	
Major LT (NB)	0 s	

CHAPTER 16 - OPERATIONAL ANALYSIS - SUMMARY WORKSHEET

General Information

Analyst	ANALYST
Agency or Company	OMNI-MEANS
Analysis Period/Year	AM PEAK 2002
Comment	E+APP+PRJ

Site Information

Jurisdiction/Date	CITY OF LODI 2/12/03
EB/WB Street	SUNSET SAF
NB/SB Street	LOWER SACR

Intersection Data

Area type Other Analysis period 1 h Signal type Actuated-Field % Back of queue 95

	EB			WB			NB			SB		
	LT	TH	RT	LT	TH	RT	LT	TH	RT	LT	TH	RT
Volume (veh/h)	124	3	51	19	2	27	93	346	16	53	558	95
RTOR volume (veh/h)			0			0			0			0
Peak-hour factor	.92	.92	.92	.92	.92	.92	.92	.92	.92	.92	.92	.92
Heavy vehicles (%)	2	2	2	2	2	2	2	2	2	2	2	2
Start-up lost time, l_1 (s)	2	2	2	2	2	2	2	2	2	2	2	2
Extension of effective green, e (s)	2	2	2	2	2	2	2	2	2	2	2	2
Arrival type, AT	3	3	3	3	3	3	3	3	3	3	3	3
Approach pedestrian volume (p/h)	50			50			50			50		
Approach bicycle volume (bic/h)	0			0			0			0		
Left/right parking (Y or N)	N	/	N	N	/	N	N	/	N	N	/	N

Signal Phasing Plan

L: LT T: TH R: RT P: Peds

	Phase 1	Phase 2	Phase 3	Phase 4	Phase 5	Phase 6	Phase 7	Phase 8
EB	LTR							
WB	LTR							
NB		L	LTR	TR				
SB		L		TR				
Green (s)	25	17	5	45				
Yellow + All red (s)	3	3	3	3				

Cycle (s) 104 Lost time per cycle (s) 9 Critical v/c Ratio .341

Intersection Performance

	EB			WB			NB			SB		
Lane group configuration		LT	R		LT	R	L	T	R	L	TR	
No. of lanes		1	1		1	1	1	2	1	1	3	
Flow rate (veh/h)		138	55		23	29	101	376	17	58	710	
Capacity (veh/h)		303	354		343	354	425	1807	761	289	2124	
Adjusted saturation flow (veh/h)		1259	1473		1425	1473	1770	3547	1494	1770	4909	
v/c ratio		.456	.157		.067	.083	.238	.208	.023	.199	.334	
g/C ratio		.24	.24		.24	.24	.24	.51	.51	.163	.433	
Average back of queue (veh)		44.8	76		80.5	81.9	83.6	182.1	186.3	59.4	122.7	
Uniform delay (s)		33.7	31.2		30.5	30.6	31.8	14	12.7	37.6	19.6	
Incremental delay (s)		.8	0		0	0	0	0	0	0	0	
Initial queue delay (s)		0	0		0	0	0	0	0	0	0	
Delay (s)		34.5	31.2		30.5	30.6	31.8	14	12.7	37.6	19.6	
LOS		C	C		C	C	C	B	B	D	B	
Approach delay (s)/LOS	33.5	/	C	30.6	/	C	17.6	/	B	20.9	/	C
Intersection delay (s)/ LOS	21.8			/			C					

©Catalina Engineering, Inc.

HCAP 2000 - Graphical Output

File

Delay(s) and LOS by Lane

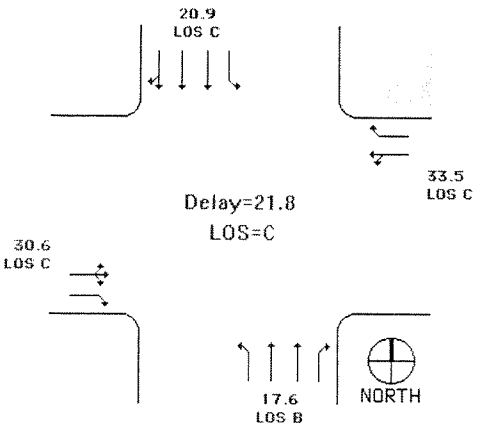

Hourly Movement Volume (veh/h)

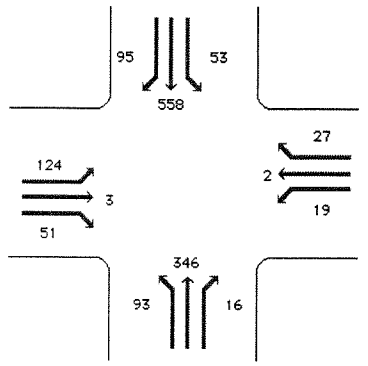

Chapter 16 - Signalized Intersections - Summary of Analysis

Analyst	ANALYST
Agency	OMNI-MEANS
Date	2/12/03
Period	AM PEAK
EW Street	SUNSET SAFEWAY DRVWY.
NS Street	LOWER SACRAMENTO RD.

Approach	Delay	LOS
EB approach	33.5 s	C
WB approach	30.6 s	C
NB approach	17.6 s	B
SB approach	20.9 s	C

CHAPTER 16 - OPERATIONAL ANALYSIS - SUMMARY WORKSHEET

General Information

Analyst	ANALYST		
Agency or Company	OMNI-MEANS		
Analysis Period/Year	PM PEAK	2002	
Comment	E+APP+PRJ		

Site Information

Jurisdiction/Date	CITY OF LODI	2/12/03
EB/WB Street	SUNSET SAF	
NB/SB Street	LOWER SACR	

Intersection Data

Area type Other Analysis period 1 h Signal type Actuated-Field % Back of queue 95

	EB			WB			NB			SB		
	LT	TH	RT	LT	TH	RT	LT	TH	RT	LT	TH	RT
Volume (veh/h)	253	4	111	41	4	109	151	671	66	89	552	145
RTOR volume (veh/h)			0			0			0			0
Peak-hour factor	.92	.92	.92	.92	.92	.92	.92	.92	.92	.92	.92	.92
Heavy vehicles (%)	2	2	2	2	2	2	2	2	2	2	2	2
Start-up lost time, l_1 (s)	2	2	2	2	2	2	2	2	2	2	2	2
Extension of effective green, e (s)	2	2	2	2	2	2	2	2	2	2	2	2
Arrival type, AT	3	3	3	3	3	3	3	3	3	3	3	3
Approach pedestrian volume (p/h)	50			50			50			50		
Approach bicycle volume (bic/h)	0			0			0			0		
Left/right parking (Y or N)	N	/	N	N	/	N	N	/	N	N	/	N

Signal Phasing Plan

L: LT T: TH R: RT P: Peds

	Phase 1	Phase 2	Phase 3	Phase 4	Phase 5	Phase 6	Phase 7	Phase 8
EB	LTR							
WB	LTR							
NB		L	LTR	TR				
SB		L		TR				
Green (s)	31	17	5	39				
Yellow + All red (s)	3	3	3	3				

Cycle (s) 104 Lost time per cycle (s) 9 Critical v/c Ratio .528

Intersection Performance

	EB			WB			NB			SB		
Lane group configuration		LT	R		LT	R	L	T	R	L	TR	
No. of lanes		1	1		1	1	1	2	1	1	3	
Flow rate (veh/h)		279	121		49	118	164	729	72	97	758	
Capacity (veh/h)		375	445		409	445	425	1603	671	289	1813	
Adjusted saturation flow (veh/h)		1258	1492		1372	1492	1770	3547	1484	1770	4835	
v/c ratio		.745	.271		.12	.266	.386	.455	.107	.334	.418	
g/C ratio		.298	.298		.298	.298	.24	.452	.452	.163	.375	
Average back of queue (veh)		32.4	83.9		91.1	84.3	69.6	117	151	50.8	93.8	
Uniform delay (s)		32.9	27.9		26.6	27.8	33.1	19.7	16.4	38.5	24.1	
Incremental delay (s)		8.3	0		0	0	.1	.1	0	0	.1	
Initial queue delay (s)		0	0		0	0	0	0	0	0	0	
Delay (s)		41.2	27.9		26.6	27.8	33.2	19.8	16.4	38.5	24.2	
LOS		D	C		C	C	C	B	B	D	C	
Approach delay (s)/LOS	37.2	/	D	27.5	/	C	21.8	/	C	25.8	/	C
Intersection delay (s)/ LOS	26.2			/			C					

©Catalina Engineering, Inc.

HICAP 2000 - Graphical Output

File

Delay(s) and LOS by Lane

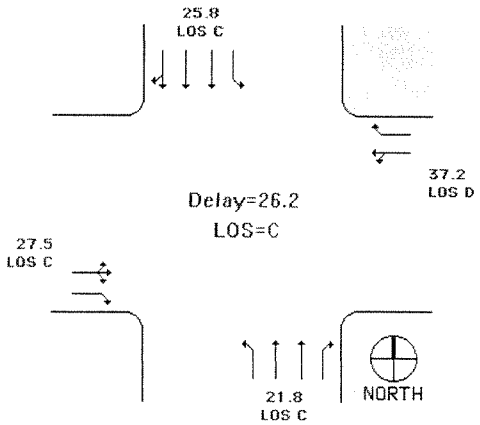

Hourly Movement Volume (veh/h)

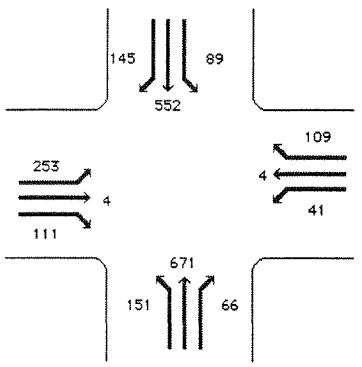

Chapter 16 - Signalized Intersections - Summary of Analysis

Analyst	ANALYST
Agency	OMNI-MEANS
Date	2/12/03
Period	PM PEAK
EW Street	SUNSET SAFEWAY DRVWY.
NS Street	LOWER SACRAMENTO RD.

Approach	Delay	LOS
EB approach	37.2 s	D
WB approach	27.5 s	C
NB approach	21.8 s	C
SB approach	25.8 s	C

CHAPTER 16 - OPERATIONAL ANALYSIS - SUMMARY WORKSHEET

General Information

Analyst	ANALYST
Agency or Company	OMNI-MEANS
Analysis Period/Year	AM PEAK 2002
Comment	E+APP+PRJ

Site Information

Jurisdiction/Date	CITY OF LODI 2/12/03
EB/WB Street	KETTLEMEN
NB/SB Street	LOWER SACR

Intersection Data

Area type Other Analysis period 1 h Signal type Actuated-Field % Back of queue 95

	EB			WB			NB			SB		
	LT	TH	RT	LT	TH	RT	LT	TH	RT	LT	TH	RT
Volume (veh/h)	77	362	29	185	418	139	66	195	165	225	337	95
RTOR volume (veh/h)			0			0			0			0
Peak-hour factor	.92	.92	.92	.92	.92	.92	.92	.92	.92	.92	.92	.92
Heavy vehicles (%)	9	9	9	9	9	9	2	2	2	2	2	2
Start-up lost time, l_1 (s)	2	2	2	2	2	2	2	2	2	2	2	2
Extension of effective green, e (s)	2	2	2	2	2	2	2	2	2	2	2	2
Arrival type, AT	3	3	3	3	3	3	3	3	3	3	3	3
Approach pedestrian volume (p/h)	50			50			50			50		
Approach bicycle volume (bic/h)	0			0			0			0		
Left/right parking (Y or N)	N	/	N	N	/	N	N	/	N	N	/	N

Signal Phasing Plan

L: LT T: TH R: RT P: Peds

	Phase 1	Phase 2	Phase 3	Phase 4	Phase 5	Phase 6	Phase 7	Phase 8
EB	L		TR					
WB	L	LTR	TR					
NB				L		TR		
SB				L	LTR	TR		
Green (s)	17	5	24	12	5	19		
Yellow + All red (s)	3	3	3	3	3	3		

Cycle (s) 100 Lost time per cycle (s) 12 Critical v/c Ratio .44

Intersection Performance

	EB			WB			NB			SB		
Lane group configuration	L	TR		L	T	R	L	T	R	L	T	R
No. of lanes	2	2		2	2	1	2	3	1	2	2	1
Flow rate (veh/h)	84	425		201	454	151	72	212	179	245	366	103
Capacity (veh/h)	547	781		804	1062	448	412	964	277	687	958	401
Adjusted saturation flow (veh/h)	3216	3254		3216	3319	1401	3437	5074	1460	3437	3547	1484
v/c ratio	.153	.544		.25	.428	.337	.174	.22	.647	.356	.383	.258
g/C ratio	.17	.24		.25	.32	.32	.12	.19	.19	.2	.27	.27
Average back of queue (veh)	58.9	50.2		77.7	81.3	77.8	43.5	64.4	29.7	58.5	78.3	76.7
Uniform delay (s)	35.4	33.2		30	26.8	25.9	39.5	34.2	37.4	34.5	29.7	28.6
Incremental delay (s)	0	.8		0	.1	0	0	0	5.3	0	0	0
Initial queue delay (s)	0	0		0	0	0	0	0	0	0	0	0
Delay (s)	35.4	34		30	26.9	25.9	39.5	34.2	42.7	34.5	29.8	28.6
LOS	D	C		C	C	C	D	C	D	C	C	C
Approach delay (s)/LOS	34.2	/	C	27.5	/	C	38.3	/	D	31.2	/	C
Intersection delay (s)/ LOS	31.9			/						C		

©Catalina Engineering, Inc.

HICAP 2000 - Graphical Output

File

Delay(s) and LOS by Lane

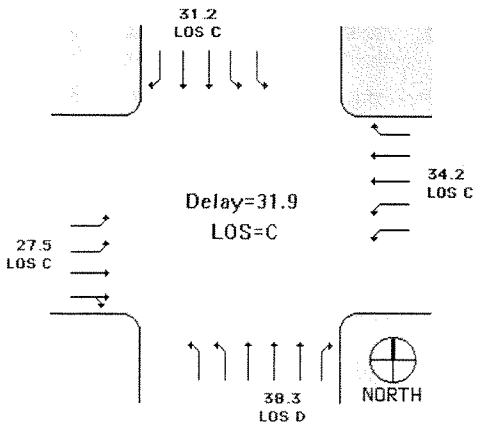

Hourly Movement Volume (veh/h)

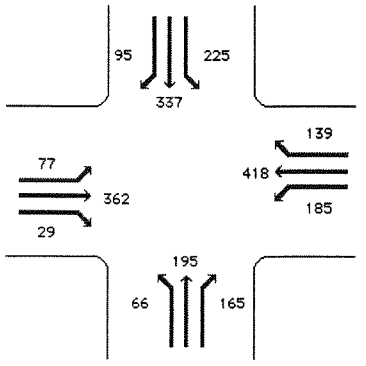

Chapter 16 - Signalized Intersections - Summary of Analysis

Analyst	ANALYST
Agency	OMNI-MEANS
Date	2/12/03
Period	AM PEAK
EW Street	KETTLEMEN LN.
NS Street	LOWER SACRAMENTO RD.

Approach	Delay	LOS
EB approach	34.2 s	C
WB approach	27.5 s	C
NB approach	38.3 s	D
SB approach	31.2 s	C

CHAPTER 16 - OPERATIONAL ANALYSIS - SUMMARY WORKSHEET

General Information

Analyst	ANALYST		
Agency or Company	OMNI-MEANS		
Analysis Period/Year	PM PEAK	2002	
Comment	E+APP+PRJ		

Site Information

Jurisdiction/Date	CITY OF LODI	2/12/03
EB/WB Street	KETTLEMEN	
NB/SB Street	LOWER SACR	

Intersection Data

Area type Other Analysis period 1 h Signal type Actuated-Field % Back of queue 95

	EB			WB			NB			SB		
	LT	TH	RT	LT	TH	RT	LT	TH	RT	LT	TH	RT
Volume (veh/h)	122	523	164	134	360	353	99	454	142	407	400	85
RTOR volume (veh/h)			0			202			64			58
Peak-hour factor	.92	.92	.92	.92	.92	.92	.92	.92	.92	.92	.92	.92
Heavy vehicles (%)	9	9	9	9	9	9	2	2	2	2	2	2
Start-up lost time, l_1 (s)	2	2	2	2	2	2	2	2	2	2	2	2
Extension of effective green, e (s)	2	2	2	2	2	2	2	2	2	2	2	2
Arrival type, AT	3	3	3	3	3	3	3	3	3	3	3	3
Approach pedestrian volume (p/h)	50			50			50			50		
Approach bicycle volume (bic/h)	0			0			0			0		
Left/right parking (Y or N)	N	/	N	N	/	N	N	/	N	N	/	N

Signal Phasing Plan

L: LT T: TH R: RT P: Peds

	Phase 1	Phase 2	Phase 3	Phase 4	Phase 5	Phase 6	Phase 7	Phase 8
EB	L	LTR	TR					
WB	L		TR					
NB				L		TR		
SB				L	LTR	TR		
Green (s)	17	3	27	12	5	18		
Yellow + All red (s)	3	3	3	3	3	3		

Cycle (s) 100 Lost time per cycle (s) 12 Critical v/c Ratio .577

Intersection Performance

	EB			WB			NB			SB		
Lane group configuration	L	TR		L	T	R	L	T	R	L	T	R
No. of lanes	2	2		2	2	1	2	3	1	2	2	1
Flow rate (veh/h)	133	747		146	391	164	108	493	85	442	435	29
Capacity (veh/h)	740	1040		547	896	375	412	913	263	687	922	385
Adjusted saturation flow (veh/h)	3216	3153		3216	3319	1388	3437	5074	1460	3437	3547	1480
v/c ratio	.179	.718		.266	.437	.438	.261	.54	.323	.644	.471	.076
g/C ratio	.23	.33		.17	.27	.27	.12	.18	.18	.2	.26	.26
Average back of queue (veh)	77.4	47.1		52	67.9	56.8	39.6	39.6	46.7	36.9	66.4	89.5
Uniform delay (s)	30.9	29.4		36.1	30.2	30.2	40	37.2	35.7	36.7	31.2	27.9
Incremental delay (s)	0	2.4		0	.2	.5	0	.7	0	2.1	.3	0
Initial queue delay (s)	0	0		0	0	0	0	0	0	0	0	0
Delay (s)	30.9	31.9		36.1	30.4	30.7	40	37.9	35.7	38.8	31.5	27.9
LOS	C	C		D	C	C	D	D	D	D	C	C
Approach delay (s)/LOS	31.7	/	C	31.6	/	C	37.9	/	D	35	/	C
Intersection delay (s)/ LOS	34			/			C					

©Catalina Engineering, Inc.

HCAP 2000 Graphical Output

File

Delay(s) and LOS by Lane

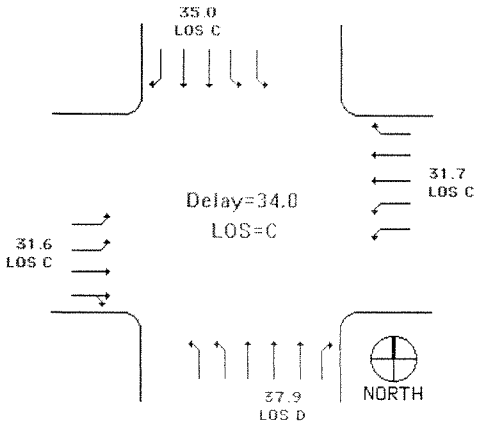

Hourly Movement Volume (veh/h)

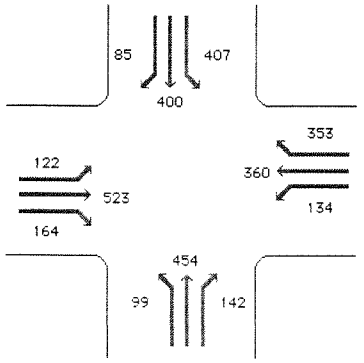

Chapter 16 - Signalized Intersections - Summary of Analysis

Analyst	ANALYST
Agency	OMNI-MEANS
Date	2/12/03
Period	PM PEAK
EW Street	KETTLEMEN LN.
NS Street	LOWER SACRAMENTO RD

Approach	Delay	LOS
EB approach	31.7 s	C
WB approach	31.6 s	C
NB approach	37.9 s	D
SB approach	35.0 s	C

CHAPTER 16 - OPERATIONAL ANALYSIS - SUMMARY WORKSHEET

General Information

Analyst	PJG
Agency or Company	OMNI-MEANS
Analysis Period/Year	AM PEAK 2002
Comment	E+APP+PRJ

Site Information

Jurisdiction/Date	CITY OF LODI 2/13/03
EB/WB Street	KETTLEMEN
NB/SB Street	TIENDA DR.

Intersection Data

Area type Other Analysis period 1 h Signal type Actuated-Field % Back of queue 95

	EB			WB			NB			SB		
	LT	TH	RT	LT	TH	RT	LT	TH	RT	LT	TH	RT
Volume (veh/h)	17	712	25	105	699	32	19	12	69	49	33	29
RTOR volume (veh/h)			0			0			0			15
Peak-hour factor	.92	.92	.92	.92	.92	.92	.92	.92	.92	.92	.92	.92
Heavy vehicles (%)	9	9	9	9	9	9	2	2	2	2	2	2
Start-up lost time, l_1 (s)	2	2	2	2	2	2	2	2	2	2	2	2
Extension of effective green, e (s)	2	2	2	2	2	2	2	2	2	2	2	2
Arrival type, AT	3	3	3	3	3	3	3	3	3	3	3	3
Approach pedestrian volume (p/h)	50			50			50			50		
Approach bicycle volume (bic/h)	0			0			0			0		
Left/right parking (Y or N)	N	/	N	N	/	N	N	/	N	N	/	N

Signal Phasing Plan

L: LT T: TH R: RT P: Peds

	Phase 1	Phase 2	Phase 3	Phase 4	Phase 5	Phase 6	Phase 7	Phase 8
EB	L		TR					
WB	L	LTR	TR					
NB				LTR				
SB					LTR			
Green (s)	12	5	49	12	12			
Yellow + All red (s)	3	3	3	3	3			

Cycle (s) 105 Lost time per cycle (s) 12 Critical v/c Ratio .39

Intersection Performance

	EB			WB			NB			SB		
Lane group configuration	L	TR		L	TR		L	TR		L	LT	R
No. of lanes	1	3		2	2		1	1		1	1	1
Flow rate (veh/h)	18	801		114	795		21	88		36	53	15
Capacity (veh/h)	189	2195		613	1779		202	164		202	201	156
Adjusted saturation flow (veh/h)	1656	4703		3216	3278		1770	1432		1770	1763	1368
v/c ratio	.098	.365		.186	.447		.102	.538		.176	.265	.097
g/C ratio	.114	.467		.19	.543		.114	.114		.114	.114	.114
Average back of queue (veh)	43.2	121.5		63.8	130.7		46	21.6		42.6	38.5	35.7
Uniform delay (s)	41.7	18		35.7	14.5		41.7	43.9		42	42.5	41.6
Incremental delay (s)	0	0		0	.1		0	3.6		0	0	0
Initial queue delay (s)	0	0		0	0		0	0		0	0	0
Delay (s)	41.7	18		35.7	14.6		41.7	47.4		42	42.5	41.6
LOS	D	B		D	B		D	D		D	D	D
Approach delay (s)/LOS	18.5	/	B	17.2	/	B	46.3	/	D	42.2	/	D
Intersection delay (s)/ LOS	20.8					/				C		

©Catalina Engineering, Inc.

HICAP 2000 - Graphical Output

File

Delay(s) and LOS by Lane

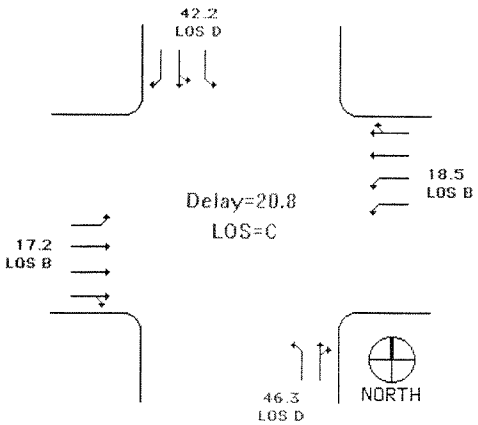

Hourly Movement Volume (veh/h)

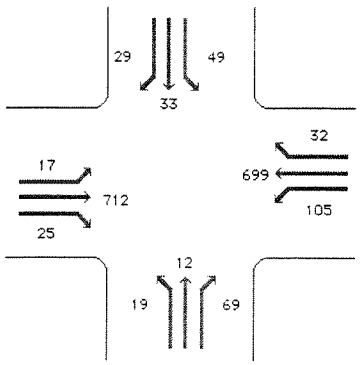

Chapter 16 - Signalized Intersections - Summary of Analysis

Analyst	PJG
Agency	OMNI-MEANS
Date	2/13/03
Period	AM PEAK
EW Street	KETTLEMEN LN.
NS Street	TIENDA DR.

Approach	Delay	LOS
EB approach	18.5 s	B
WB approach	17.2 s	B
NB approach	46.3 s	D
SB approach	42.2 s	D

CHAPTER 16 - OPERATIONAL ANALYSIS - SUMMARY WORKSHEET

General Information

Analyst	ANALYST
Agency or Company	OMNI-MEANS
Analysis Period/Year	PM PEAK 2002
Comment	E+APP+PRJ

Site Information

Jurisdiction/Date	CITY OF LODI 2/13/03
EB/WB Street	KETTLEMEN
NB/SB Street	TIENDA DR.

Intersection Data

Area type Other Analysis period 1 h Signal type Actuated-Field % Back of queue 95

	EB			WB			NB			SB		
	LT	TH	RT	LT	TH	RT	LT	TH	RT	LT	TH	RT
Volume (veh/h)	116	791	60	278	593	142	94	62	267	127	113	59
RTOR volume (veh/h)			0			0			0			30
Peak-hour factor	.92	.92	.92	.92	.92	.92	.92	.92	.92	.92	.92	.92
Heavy vehicles (%)	9	9	9	9	9	9	2	2	2	2	2	2
Start-up lost time, l_1 (s)	2	2	2	2	2	2	2	2	2	2	2	2
Extension of effective green, e (s)	2	2	2	2	2	2	2	2	2	2	2	2
Arrival type, AT	3	3	3	3	3	3	3	3	3	3	3	3
Approach pedestrian volume (p/h)	50			50			50			50		
Approach bicycle volume (bic/h)	0			0			0			0		
Left/right parking (Y or N)	N	/	N	N	/	N	N	/	N	N	/	N

Signal Phasing Plan

L: LT T: TH R: RT P: Peds

	Phase 1	Phase 2	Phase 3	Phase 4	Phase 5	Phase 6	Phase 7	Phase 8
EB	L		TR					
WB	L	LTR	TR					
NB				LTR				
SB					LTR			
Green (s)	12	4	30	32	12			
Yellow + All red (s)	3	3	3	3	3			

Cycle (s) 105 Lost time per cycle (s) 12 Critical v/c Ratio .734

Intersection Performance

	EB			WB			NB			SB		
Lane group configuration	L	TR		L	TR		L	TR		L	LT	R
No. of lanes	1	3		2	2		1	1		1	1	1
Flow rate (veh/h)	126	925		302	799		102	358		92	168	32
Capacity (veh/h)	189	1331		582	1116		539	475		202	208	156
Adjusted saturation flow (veh/h)	1656	4657		3216	3166		1770	1558		1770	1823	1368
v/c ratio	.666	.695		.519	.716		.189	.753		.457	.808	.202
g/C ratio	.114	.286		.181	.352		.305	.305		.114	.114	.114
Average back of queue (veh)	19.9	42.9		39.3	51		111.6	40.2		30.2	16	32.1
Uniform delay (s)	44.6	33.4		38.9	29.5		26.9	32.9		43.5	45.4	42.2
Incremental delay (s)	9	1.6		.8	2.3		0	7		1.1	23.9	0
Initial queue delay (s)	0	0		0	0		0	0		0	0	0
Delay (s)	53.5	35		39.7	31.7		26.9	39.9		44.6	69.2	42.2
LOS	D	C		D	C		C	D		D	E	D
Approach delay (s)/LOS	37.3	/	D	33.9	/	C	37	/	D	58.5	/	E
Intersection delay (s)/ LOS	38.1				/					D		

©Catalina Engineering, Inc.

HICAP 2000 - Graphical Output

File

Delay(s) and LOS by Lane

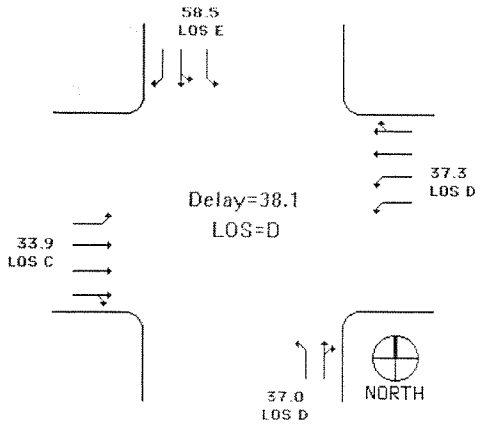

Hourly Movement Volume (veh/h)

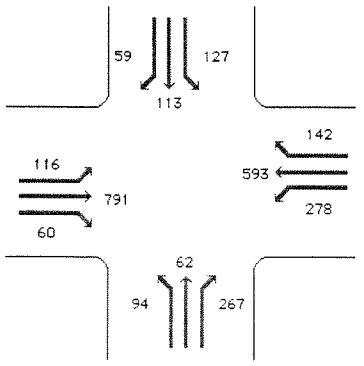

Chapter 16 - Signalized Intersections - Summary of Analysis

Analyst	ANALYST
Agency	OMNI-MEANS
Date	2/13/03
Period	PM PEAK
EW Street	KETTLEMEN LN.
NS Street	TIENDA DR.

Approach	Delay	LOS
EB approach	37.3 s	D
WB approach	33.9 s	C
NB approach	37.0 s	D
SB approach	58.5 s	E

CHAPTER 16 - OPERATIONAL ANALYSIS - SUMMARY WORKSHEET

General Information

Analyst	ANALYST
Agency or Company	OMNI-MEANS
Analysis Period/Year	AM PEAK 2002
Comment	E+APP+PRJ

Site Information

Jurisdiction/Date	CITY OF LODI 2/13/03
EB/WB Street	KETTLEMEN
NB/SB Street	S. MILLS A

Intersection Data

Area type Other Analysis period 1 h Signal type Actuated-Field % Back of queue 95

	EB			WB			NB			SB		
	LT	TH	RT	LT	TH	RT	LT	TH	RT	LT	TH	RT
Volume (veh/h)	56	631	64	37	586	75	151	145	44	94	62	54
RTOR volume (veh/h)			32			25			0			20
Peak-hour factor	.92	.92	.92	.92	.92	.92	.92	.92	.92	.92	.92	.92
Heavy vehicles (%)	9	9	9	9	9	9	2	2	2	2	2	2
Start-up lost time, l_1 (s)	2	2	2	2	2	2	2	2	2	2	2	2
Extension of effective green, e (s)	2	2	2	2	2	2	2	2	2	2	2	2
Arrival type, AT	3	3	3	3	3	3	3	3	3	3	3	3
Approach pedestrian volume (p/h)	50			50			50			50		
Approach bicycle volume (bic/h)	0			0			0			0		
Left/right parking (Y or N)	N	/	N	N	/	N	N	/	N	N	/	N

Signal Phasing Plan

L: LT T: TH R: RT P: Peds

	Phase 1	Phase 2	Phase 3	Phase 4	Phase 5	Phase 6	Phase 7	Phase 8
EB	L		TR					
WB	L	LTR	TR					
NB				L	LTR	TR		
SB				L		TR		
Green (s)	12	5	49	12	5	15		
Yellow + All red (s)	3	3	3	3	3	3		

Cycle (s) 116 Lost time per cycle (s) 12 Critical v/c Ratio .453

Intersection Performance

	EB			WB			NB			SB		
Lane group configuration	L	T	R	L	T	R	L	TR		L	T	R
No. of lanes	1	2	1	1	2	1	1	1		1	1	1
Flow rate (veh/h)	61	686	35	40	637	54	164	205		102	67	37
Capacity (veh/h)	171	1402	584	286	1631	686	305	347		183	241	180
Adjusted saturation flow (veh/h)	1656	3319	1383	1656	3319	1395	1770	1752		1770	1863	1389
v/c ratio	.355	.489	.06	.141	.391	.079	.538	.591		.558	.28	.206
g/C ratio	.103	.422	.422	.172	.491	.491	.172	.198		.103	.129	.129
Average back of queue (veh)	29.6	98.2	138.1	62.5	131.1	158.8	40.5	42.1		23.7	45.5	36.8
Uniform delay (s)	48.4	24.4	19.8	40.7	18.6	15.6	43.8	42.2		49.5	45.6	45.2
Incremental delay (s)	0	.2	0	0	0	0	1.9	2.7		3.8	0	0
Initial queue delay (s)	0	0	0	0	0	0	0	0		0	0	0
Delay (s)	48.4	24.6	19.8	40.7	18.6	15.6	45.7	44.9		53.3	45.6	45.2
LOS	D	C	B	D	B	B	D	D		D	D	D
Approach delay (s)/LOS	26.3	/	C	19.6	/	B	45.3	/	D	49.3	/	D
Intersection delay (s)/ LOS	29.6				/					C		

©Catalina Engineering, Inc.

NiCAP 2000 - Graphical Output

File

Delay(s) and LOS by Lane

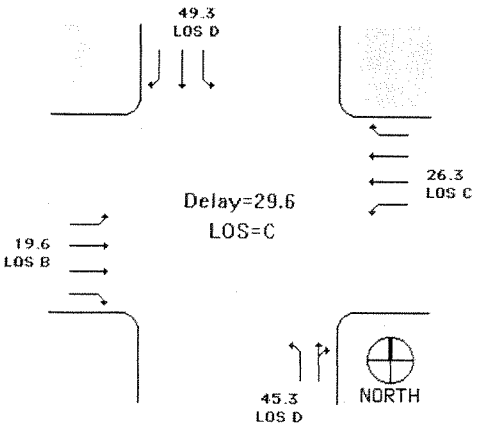

Hourly Movement Volume (veh/h)

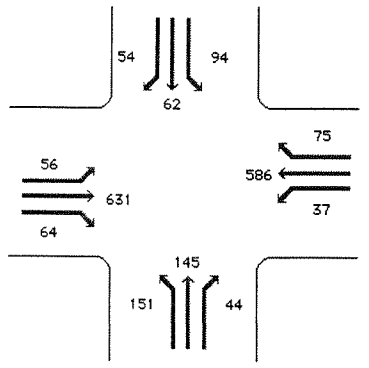

Chapter 16 - Signalized Intersections - Summary of Analysis

Analyst	ANALYST
Agency	OMNI-MEANS
Date	2/13/03
Period	AM PEAK
EW Street	KETTLEMEN LN.
NS Street	S. MILLS AVE.

Approach	Delay	LOS
EB approach	26.3 s	C
WB approach	19.6 s	B
NB approach	45.3 s	D
SB approach	49.3 s	D

CHAPTER 16 - OPERATIONAL ANALYSIS - SUMMARY WORKSHEET

General Information

Analyst	ANALYST
Agency or Company	OMNI-MEANS
Analysis Period/Year	PM PEAK 2002
Comment	E+APP+PRJ

Site Information

Jurisdiction/Date	CITY OF LODI 2/13/03
EB/WB Street	KETTLEMEN
NB/SB Street	S. MILLS A

Intersection Data

Area type Other Analysis period 1 h Signal type Actuated-Field % Back of queue 95

	EB			WB			NB			SB		
	LT	TH	RT	LT	TH	RT	LT	TH	RT	LT	TH	RT
Volume (veh/h)	104	921	98	87	837	59	112	101	49	93	103	110
RTOR volume (veh/h)			49			25			0			44
Peak-hour factor	.92	.92	.92	.92	.92	.92	.92	.92	.92	.92	.92	.92
Heavy vehicles (%)	9	9	9	9	9	9	2	2	2	2	2	2
Start-up lost time, l_1 (s)	2	2	2	2	2	2	2	2	2	2	2	2
Extension of effective green, e (s)	2	2	2	2	2	2	2	2	2	2	2	2
Arrival type, AT	3	3	3	3	3	3	3	3	3	3	3	3
Approach pedestrian volume (p/h)	50			50			50			50		
Approach bicycle volume (bic/h)	0			0			0			0		
Left/right parking (Y or N)	N	/	N	N	/	N	N	/	N	N	/	N

Signal Phasing Plan

L: LT T: TH R: RT P: Peds

	Phase 1	Phase 2	Phase 3	Phase 4	Phase 5	Phase 6	Phase 7	Phase 8
EB	L		TR					
WB	L	LTR	TR					
NB				L	LTR	TR		
SB				L		TR		
Green (s)	8	4	53	10	4	10		
Yellow + All red (s)	3	3	3	3	3	3		

Cycle (s) 107 Lost time per cycle (s) 12 Critical v/c Ratio .576

Intersection Performance

	EB			WB			NB			SB		
Lane group configuration	L	T	R	L	T	R	L	TR		L	T	R
No. of lanes	1	2	1	1	2	1	1	1		1	1	1
Flow rate (veh/h)	113	1001	53	95	910	37	122	163		101	112	72
Capacity (veh/h)	124	1644	691	232	1861	788	281	271		165	174	128
Adjusted saturation flow (veh/h)	1656	3319	1396	1656	3319	1405	1770	1703		1770	1863	1364
v/c ratio	.913	.609	.077	.407	.489	.047	.433	.602		.611	.643	.563
g/C ratio	.075	.495	.495	.14	.561	.561	.159	.159		.093	.093	.093
Average back of queue (veh)	7.8	92.2	160.4	37.2	127.8	188.2	43.4	31.9		19.4	19.2	16.3
Uniform delay (s)	49.2	19.5	14.2	41.9	14.2	10.6	40.6	41.9		46.6	46.8	46.4
Incremental delay (s)	85.4	.7	0	.4	.2	0	.6	3.8		6.7	8.2	5.7
Initial queue delay (s)	0	0	0	0	0	0	0	0		0	0	0
Delay (s)	134.5	20.2	14.2	42.3	14.4	10.6	41.2	45.7		53.3	54.9	52.1
LOS	F	C	B	D	B	B	D	D		D	D	D
Approach delay (s)/LOS	31	/	C	16.8	/	B	43.8	/	D	53.6	/	D
Intersection delay (s)/ LOS	29.3			/						C		

©Catalina Engineering, Inc.

HiCAP 2000 - Graphical Output

File

Delay(s) and LOS by Lane

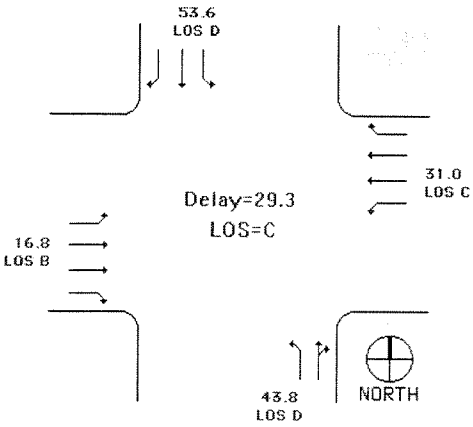

Hourly Movement Volume (veh/h)

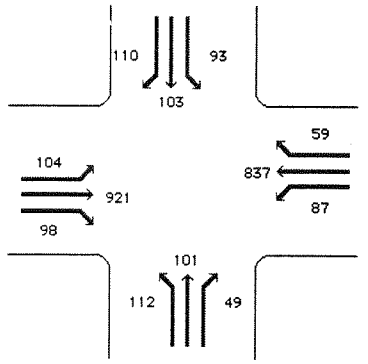

Chapter 16 - Signalized Intersections - Summary of Analysis

Analyst	ANALYST
Agency	OMNI-MEANS
Date	2/13/03
Period	PM PEAK
EW Street	KETTLEMEN LN.
NS Street	S. MILLS AVE.

Approach	Delay	LOS
EB approach	31.0 s	C
WB approach	16.8 s	B
NB approach	43.8 s	D
SB approach	53.6 s	D

CHAPTER 16 - OPERATIONAL ANALYSIS - SUMMARY WORKSHEET

General Information

Analyst	PJG
Agency or Company	OMNI-MEANS
Analysis Period/Year	AM PEAK 2002
Comment	E+APP+PRJ

Site Information

Jurisdiction/Date	CITY OF LODI 2/13/03
EB/WB Street	KETTLEMEN
NB/SB Street	ROAD A

Intersection Data

Area type Other Analysis period 1 h Signal type Actuated-Field % Back of queue 95

	EB			WB			NB			SB		
	LT	TH	RT	LT	TH	RT	LT	TH	RT	LT	TH	RT
Volume (veh/h)	83	415			524	23				53	0	25
RTOR volume (veh/h)			0			0						0
Peak-hour factor	.92	.92			.92	.92				.92	.92	.92
Heavy vehicles (%)	2	2			2	2				2	2	2
Start-up lost time, l_1 (s)	2	2			2	2				2	2	2
Extension of effective green, e (s)	2	2			2	2				2	2	2
Arrival type, AT	3	3			3	3				3	3	3
Approach pedestrian volume (p/h)	50			50						50		
Approach bicycle volume (bic/h)	0			0						0		
Left/right parking (Y or N)	N	/	N	N	/	N		/		N	/	N

Signal Phasing Plan

L: LT T: TH R: RT P: Peds

	Phase 1	Phase 2	Phase 3	Phase 4	Phase 5	Phase 6	Phase 7	Phase 8
EB		LT	T					
WB			TR					
NB								
SB	LTR							
Green (s)	20	20	51					
Yellow + All red (s)	3	3	3					

Cycle (s) 100 Lost time per cycle (s) 3 Critical v/c Ratio .401

Intersection Performance

	EB			WB			NB			SB		
Lane group configuration	L	T			T	R				L	TR	
No. of lanes	1	1			1	1				1	1	
Flow rate (veh/h)	90	451			570	25				58	0	
Capacity (veh/h)	354	1368			950	801				354	370	
Adjusted saturation flow (veh/h)	1770	1848			1863	1571				1770	1848	
v/c ratio	.255	.33			.6	.031				.163	0	
g/C ratio	.2	.74			.51	.51				.2	.2	
Average back of queue (veh)	2.2	4.7			12.2	.4				1.4		
Uniform delay (s)	33.7	4.5			17.3	12.2				33.1	32	
Incremental delay (s)	0	0			1.1	0				0	0	
Initial queue delay (s)	0	0			0	0				0		
Delay (s)	33.7	4.5			18.4	12.2				33.1	32	
LOS	C	A			B	B				C	C	
Approach delay (s)/LOS	9.3	/	A	18.1	/	B		/		33.1	/	C
Intersection delay (s)/ LOS	14.9				/					B		

©Catalina Engineering, Inc.

HCAP 2000 - Graphical Output

File

Delay(s) and LOS by Lane

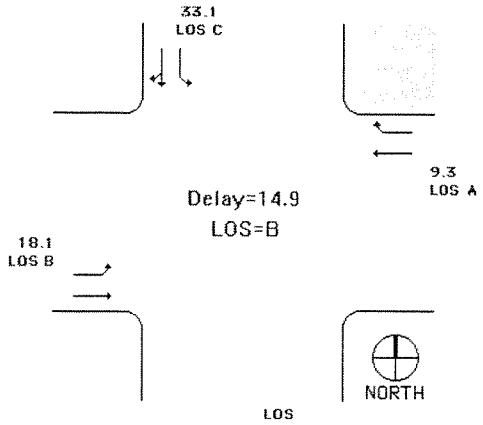

Hourly Movement Volume (veh/h)

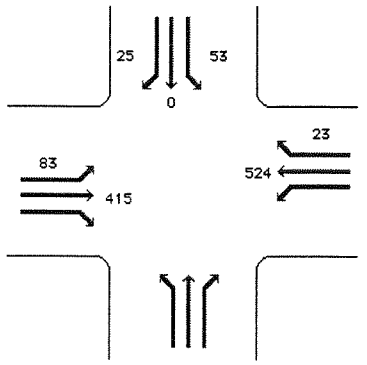

Chapter 16 - Signalized Intersections - Summary of Analysis

Analyst	PJG
Agency	OMNI-MEANS
Date	2/13/03
Period	AM PEAK
EW Street	KETTLEMEN LN.
NS Street	ROAD A

Approach	Delay	LOS
EB approach	9.3 s	A
WB approach	18.1 s	B
NB approach	s	
SB approach	33.1 s	C

CHAPTER 16 - OPERATIONAL ANALYSIS - SUMMARY WORKSHEET

General Information

Analyst	PJG
Agency or Company	OMNI-MEANS
Analysis Period/Year	PM PEAK 2002
Comment	E+APP+PRJ

Site Information

Jurisdiction/Date	CITY OF LODI 2/13/03
EB/WB Street	KETTLEMEN
NB/SB Street	ROAD A

Intersection Data

Area type Other Analysis period 1 h Signal type Actuated-Field % Back of queue 95

	EB			WB			NB			SB		
	LT	TH	RT	LT	TH	RT	LT	TH	RT	LT	TH	RT
Volume (veh/h)	134	703			486	38				108	0	51
RTOR volume (veh/h)			0			0						0
Peak-hour factor	.92	.92			.92	.92				.92	.92	.92
Heavy vehicles (%)	2	2			2	2				2	2	2
Start-up lost time, l_1 (s)	2	2			2	2				2	2	2
Extension of effective green, e (s)	2	2			2	2				2	2	2
Arrival type, AT	3	3			3	3				3	3	3
Approach pedestrian volume (p/h)	50			50						50		
Approach bicycle volume (bic/h)	0			0						0		
Left/right parking (Y or N)	N	/	N	N	/	N		/		N	/	N

Signal Phasing Plan

L: LT T: TH R: RT P: Peds

	Phase 1	Phase 2	Phase 3	Phase 4	Phase 5	Phase 6	Phase 7	Phase 8
EB		LT	T					
WB			TR					
NB								
SB	LR							
Green (s)	20	20	51					
Yellow + All red (s)	3	3	3					

Cycle (s) 100 Lost time per cycle (s) 3 Critical v/c Ratio .495

Intersection Performance

	EB			WB			NB			SB		
Lane group configuration	L	T			T	R				L	TR	
No. of lanes	1	1			1	1				1	1	
Flow rate (veh/h)	146	764			528	41				117	0	
Capacity (veh/h)	354	1368			950	801				354		
Adjusted saturation flow (veh/h)	1770	1848			1863	1571				1770	1848	
v/c ratio	.412	.559			.556	.052				.332		
g/C ratio	.2	.74			.51	.51				.2		
Average back of queue (veh)	3.8	10.5			10.9	.6				3		
Uniform delay (s)	34.9	5.8			16.8	12.3				34.3		
Incremental delay (s)	.3	.5			.7	0				0		
Initial queue delay (s)	0	0			0	0				0		
Delay (s)	35.2	6.3			17.5	12.3				34.3		
LOS	D	A			B	B				C		
Approach delay (s)/LOS	10.9	/	B	17.1	/	B		/		34.3	/	C
Intersection delay (s)/ LOS	14.8				/					B		

©Catalina Engineering, Inc.

HiCAP 2000 - Graphical Output

File

Delay(s) and LOS by Lane

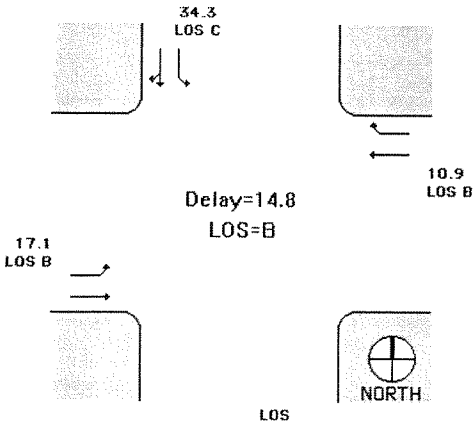

Hourly Movement Volume (veh/h)

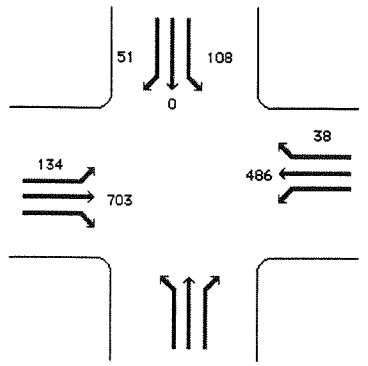

Chapter 16 - Signalized Intersections - Summary of Analysis

Analyst	PJG
Agency	OMNI-MEANS
Date	2/13/03
Period	PM PEAK
EW Street	KETTLEMEN LN.
NS Street	ROAD A

Approach	Delay	LOS
EB approach	10.9 s	B
WB approach	17.1 s	B
NB approach	s	
SB approach	34.3 s	C

-Cumulative Year 2020 LOS Calculations-

CHAPTER 17 - TWSC - UNSIGNALIZED INTERSECTIONS WORKSHEET

Analysis Summary

General Information			Site Information		
Analyst	PJG		Jurisdiction/Date	CITY OF LODI	12/11/02
Agency or Company	OMNI-MEANS		Major Street	LOWER SACRAMENTO RD.	
Analysis Period/Year	AM PEAK	2002	Minor Street	TAYLOR ROA	
Comment	CUMULATIVE				

Input Data

Lane Configuration	SB	NB	EB	WB
Lane 1 (curb)	TR	T	R	
Lane 2	T	T		
Lane 3		L		

	SB			NB			EB			WB		
Movement	1 (LT)	2 (TH)	3 (RT)	4 (LT)	5 (TH)	6 (RT)	7 (LT)	8 (TH)	9 (RT)	10 (LT)	11 (TH)	12 (RT)
Volume (veh/h)		815	5	5	805				15			
PHF	.9	.9	.9	0	.9	.9	.9	.9	.9	.9	.9	.9
Proportion of heavy vehicles, HV	3	3	3	3	3	3	3	3	3	3	3	3
Flow rate	0	906	6	0	894	0	0	0	17	0	0	0
Flare storage (# of vehs)									0			0
Median storage (# of vehs)							0			0		

Signal upstream of Movement 2 _____ ft Movement 5 _____ ft

Length of study period (h) 1

Output Data

	Lane	Movement	Flow Rate (veh/h)	Capacity (veh/h)	v/c	Queue Length (veh)	Control Delay (s)	LOS	Approach Delay and LOS
EB	1	R	15	549	.027	<1	11.7	B	11.7
	2								
	3								B
WB	1								
	2								
	3								
		1	0						
		4	0	737	0	0	0		

©Catalina Engineering, Inc.

HCAP 2000 - Graphical Output

File

Delay(s) and LOS by Lane

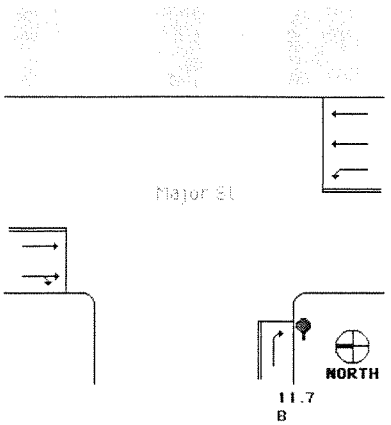

Hourly Movement Volume (veh/h)

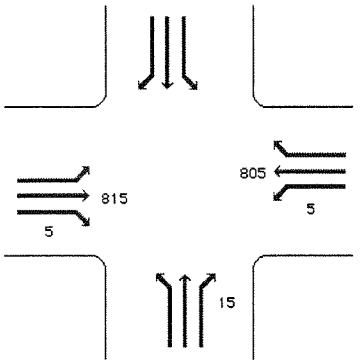

Chapter 17 - TWSC - Summary of Analysis

Analyst	PJG
Agency	OMNI-MEANS
Date	12/11/02
Period	AM PEAK
Major St.	LOWER SACRAMENTO RD.
Minor St.	TAYLOR ROAD

Approach	Delay	LOS
Minor St. (EB)	11.7 s	B
Minor St. (WB)	s	
Major LT (SB)	s	
Major LT (NB)	0 s	

CHAPTER 17 - TWSC - UNSIGNALIZED INTERSECTIONS WORKSHEET

Analysis Summary

General Information		Site Information		
Analyst	PJG	Jurisdiction/Date	CITY OF LODI	12/11/02
Agency or Company	OMNI-MEANS	Major Street	LOWER SACRAMENTO RD.	
Analysis Period/Year	PM PEAK 2002	Minor Street	TAYLOR ROA	
Comment	CUMULATIVE			

Input Data

Lane Configuration	SB	NB	EB	WB
Lane 1 (curb)	TR	T	R	
Lane 2	T	T		
Lane 3		L		

	SB			NB			EB			WB		
Movement	1 (LT)	2 (TH)	3 (RT)	4 (LT)	5 (TH)	6 (RT)	7 (LT)	8 (TH)	9 (RT)	10 (LT)	11 (TH)	12 (RT)
Volume (veh/h)		1020	10	10	1590				10			
PHF	.9	.9	.9	0	.9	.9	.9	.9	.9	.9	.9	.9
Proportion of heavy vehicles, HV	3	3	3	3	3	3	3	3	3	3	3	3
Flow rate	0	1133	11	0	1767	0	0	0	11	0	0	0
Flare storage (# of vehs)									0			0
Median storage (# of vehs)							0			0		

Signal upstream of Movement 2 _____ ft Movement 5 _____ ft

Length of study period (h) 1

Output Data

	Lane	Movement	Flow Rate (veh/h)	Capacity (veh/h)	v/c	Queue Length (veh)	Control Delay (s)	LOS	Approach Delay and LOS
EB	1	R	10	461	.022	<1	13	B	13
	2								
	3								B
WB	1								
	2								
	3								
		1	0						
		4	0	601	0	0	0		

©Catalina Engineering, Inc.

HCAP 2000 - Graphical Output

File

Delay(s) and LOS by Lane

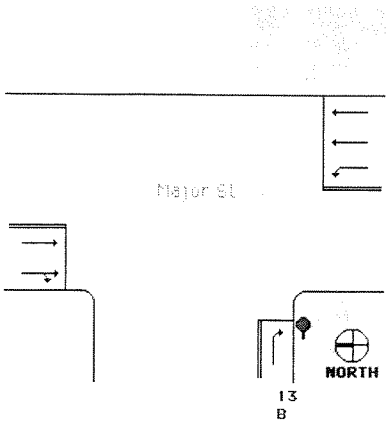

Hourly Movement Volume (veh/h)

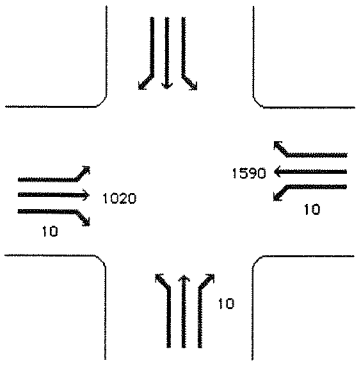

Chapter 17 - TWSC - Summary of Analysis

Analyst	PJG
Agency	OMNI-MEANS
Date	12/11/02
Period	PM PEAK
Major St.	LOWER SACRAMENTO RD.
Minor St.	TAYLOR ROAD

Approach	Delay	LOS
Minor St. (EB)	13.0 s	B
Minor St. (WB)	s	
Major LT (SB)	s	
Major LT (NB)	.0 s	

CHAPTER 16 - OPERATIONAL ANALYSIS - SUMMARY WORKSHEET

General Information

Analyst	ANALYST
Agency or Company	OMNI-MEANS
Analysis Period/Year	AM PEAK 2002
Comment	CUMULATIVE

Site Information

Jurisdiction/Date	CITY OF LODI 12/11/02
EB/WB Street	SUNSET SAF
NB/SB Street	LOWER SACR

Intersection Data

Area type Other Analysis period 1 h Signal type Actuated-Field % Back of queue 95

	EB			WB			NB			SB		
	LT	TH	RT	LT	TH	RT	LT	TH	RT	LT	TH	RT
Volume (veh/h)				20		25		755	15	49	755	
RTOR volume (veh/h)						0			0			0
Peak-hour factor				.92		.92		.92	.92	.92	.92	
Heavy vehicles (%)				2		2		2	2	2	2	
Start-up lost time, l_1 (s)				2		2		2	2	2	2	
Extension of effective green, e (s)				2		2		2	2	2	2	
Arrival type, AT				3		3		3	3	3	3	
Approach pedestrian volume (p/h)				50			50			50		
Approach bicycle volume (bic/h)				0			0			0		
Left/right parking (Y or N)		/		N	/	N	N	/	N	N	/	N

Signal Phasing Plan

L: LT T: TH R: RT P: Peds

	Phase 1	Phase 2	Phase 3	Phase 4	Phase 5	Phase 6	Phase 7	Phase 8
EB								
WB	LR							
NB			TR					
SB		LT	T					
Green (s)	25	17	57					
Yellow + All red (s)	3	3	3					

Cycle (s) 108 Lost time per cycle (s) 9 Critical v/c Ratio .305

Intersection Performance

	EB			WB			NB			SB		
Lane group configuration				L		R		T	R	L	T	
No. of lanes				1		1		2	1	1	2	
Flow rate (veh/h)				22		27		821	16	53	821	
Capacity (veh/h)				410		340		1872	829	279	2519	
Adjusted saturation flow (veh/h)				1770		1469		3547	1571	1770	3533	
v/c ratio				.053		.08		.438	.02	.191	.326	
g/C ratio				.231		.231		.528	.528	.157	.713	
Average back of queue (veh)				97.5		78.9		139.5	203.5	57.8	217.3	
Uniform delay (s)				32.3		32.5		15.7	12.2	39.5	5.8	
Incremental delay (s)				0		0		.1	0	0	0	
Initial queue delay (s)				0		0		0	0	0	0	
Delay (s)				32.3		32.5		15.8	12.2	39.5	5.8	
LOS				C		C		B	B	D	A	
Approach delay (s)/LOS		/		32.4	/	C	15.7	/	B	7.9	/	A
Intersection delay (s)/ LOS		12.3				/				B		

©Catalina Engineering, Inc.

HiCAP 2000 - Graphical Output

File

Delay(s) and LOS by Lane

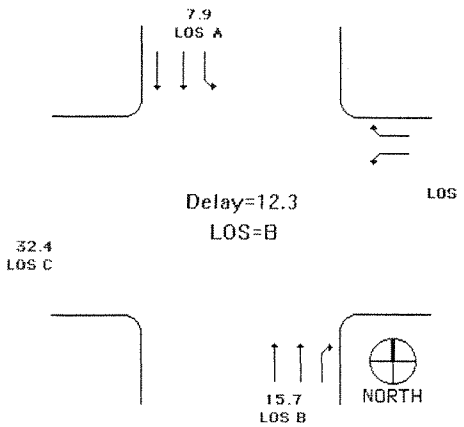

Hourly Movement Volume (veh/h)

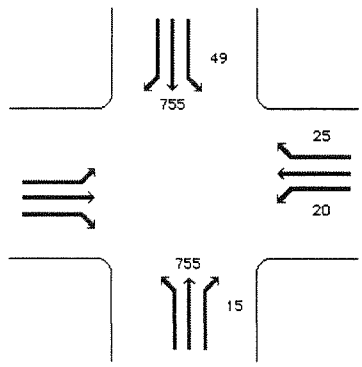

Chapter 16 - Signalized Intersections - Summary of Analysis

Analyst	ANALYST
Agency	OMNI-MEANS
Date	12/11/02
Period	AM PEAK
EW Street	SUNSET SAFEWAY DRVWY.
NS Street	LOWER SACRAMENTO RD.

Approach	Delay	LOS
EB approach	s	
WB approach	32.4 s	C
NB approach	15.7 s	B
SB approach	7.9 s	A

CHAPTER 16 - OPERATIONAL ANALYSIS - SUMMARY WORKSHEET

General Information

Analyst	ANALYST
Agency or Company	OMNI-MEANS
Analysis Period/Year	PM PEAK 2002
Comment	CUMULATIVE

Site Information

Jurisdiction/Date	CITY OF LODI 12/11/02
EB/WB Street	SUNSET SAF
NB/SB Street	LOWER SACR

Intersection Data

Area type Other Analysis period 1 h Signal type Actuated-Field % Back of queue 95

	EB			WB			NB			SB		
	LT	TH	RT	LT	TH	RT	LT	TH	RT	LT	TH	RT
Volume (veh/h)				30		90		1510	50	90	940	
RTOR volume (veh/h)						0			0			0
Peak-hour factor				.92		.92		.92	.92	.92	.92	
Heavy vehicles (%)				2		2		2	2	2	2	
Start-up lost time, l_1 (s)				2		2		2	2	2	2	
Extension of effective green, e (s)				2		2		2	2	2	2	
Arrival type, AT				3		3		3	3	3	3	
Approach pedestrian volume (p/h)				50			50			50		
Approach bicycle volume (bic/h)				0			0			0		
Left/right parking (Y or N)		/		N	/	N	N	/	N	N	/	N

Signal Phasing Plan

L: LT T: TH R: RT P: Peds

	Phase 1	Phase 2	Phase 3	Phase 4	Phase 5	Phase 6	Phase 7	Phase 8
EB								
WB	LR							
NB			TR					
SB		LT	T					
Green (s)	25	17	57					
Yellow + All red (s)	3	3	3					

Cycle (s) 108 Lost time per cycle (s) 9 Critical v/c Ratio .638

Intersection Performance

	EB			WB			NB			SB		
Lane group configuration				L		R		T	R	L	T	
No. of lanes				1		1		2	1	1	2	
Flow rate (veh/h)				33		98		1641	54	98	1022	
Capacity (veh/h)				410		340		1872	829	279	2519	
Adjusted saturation flow (veh/h)				1770		1469		3547	1571	1770	3533	
v/c ratio				.08		.288		.877	.066	.351	.406	
g/C ratio				.231		.231		.528	.528	.157	.713	
Average back of queue (veh)				95.1		63.1		55.3	194.5	48	193.9	
Uniform delay (s)				32.5		34.2		22.4	12.5	40.6	6.3	
Incremental delay (s)				0		0		5.4	0	0	0	
Initial queue delay (s)				0		0		0	0	0	0	
Delay (s)				32.5		34.2		27.8	12.5	40.6	6.3	
LOS				C		C		C	B	D	A	
Approach delay (s)/LOS		/		33.7	/	C	27.3	/	C	9.3	/	A
Intersection delay (s)/ LOS			20.8			/			C			

©Catalina Engineering, Inc.

HCAP 2000 - Graphical Output

File

Delay(s) and LOS by Lane

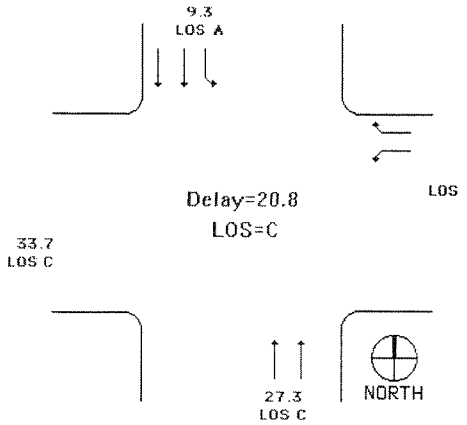

Hourly Movement Volume (veh/h)

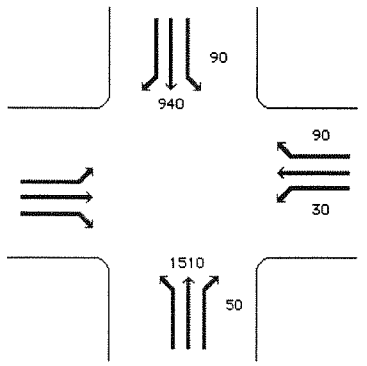

Chapter 16 - Signalized Intersections - Summary of Analysis

Analyst	ANALYST
Agency	OMNI-MEANS
Date	12/11/02
Period	PM PEAK
EW Street	SUNSET SAFEWAY DRVWY.
NS Street	LOWER SACRAMENTO RD.

Approach	Delay	LOS
EB approach	s	
WB approach	33.7 s	C
NB approach	27.3 s	C
SB approach	9.3 s	A

CHAPTER 16 - OPERATIONAL ANALYSIS - SUMMARY WORKSHEET

General Information

Analyst	ANALYST
Agency or Company	OMNI-MEANS
Analysis Period/Year	AM PEAK 2002
Comment	CUMULATIVE

Site Information

Jurisdiction/Date	CITY OF LODI 12/11/02
EB/WB Street	KETTLEMEN
NB/SB Street	LOWER SACR

Intersection Data

Area type Other Analysis period 1 h Signal type Actuated-Field % Back of queue 95

	EB			WB			NB			SB		
	LT	TH	RT	LT	TH	RT	LT	TH	RT	LT	TH	RT
Volume (veh/h)	210	920	20	450	970	220	60	340	310	225	445	125
RTOR volume (veh/h)			10			125			150			55
Peak-hour factor	.92	.92	.92	.92	.92	.92	.92	.92	.92	.92	.92	.92
Heavy vehicles (%)	9	9	9	9	9	9	2	2	2	2	2	2
Start-up lost time, l_1 (s)	2	2	2	2	2	2	2	2	2	2	2	2
Extension of effective green, e (s)	2	2	2	2	2	2	2	2	2	2	2	2
Arrival type, AT	3	3	3	3	3	3	3	3	3	3	3	3
Approach pedestrian volume (p/h)	50			50			50			50		
Approach bicycle volume (bic/h)	0			0			0			0		
Left/right parking (Y or N)	N	/	N	N	/	N	N	/	N	N	/	N

Signal Phasing Plan

L: LT T: TH R: RT P: Peds

	Phase 1	Phase 2	Phase 3	Phase 4	Phase 5	Phase 6	Phase 7	Phase 8
EB	L		TR					
WB	L	LTR	TR					
NB				L		TR		
SB				L	LTR	TR		
Green (s)	17	5	28	12	5	19		
Yellow + All red (s)	3	3	3	3	3	3		

Cycle (s) 104 Lost time per cycle (s) 12 Critical v/c Ratio .626

Intersection Performance

	EB			WB			NB			SB		
Lane group configuration	L	T	R	L	T	R	L	T	R	L	T	R
No. of lanes	2	3	1	2	3	1	2	3	1	2	3	1
Flow rate (veh/h)	228	1000	11	489	1054	103	65	370	174	245	484	76
Capacity (veh/h)	526	1278	374	773	1644	487	397	927	266	661	1317	384
Adjusted saturation flow (veh/h)	3216	4748	1388	3216	4748	1406	3437	5074	1455	3437	5074	1480
v/c ratio	.434	.782	.029	.633	.641	.212	.164	.399	.654	.37	.367	.198
g/C ratio	.163	.269	.269	.24	.346	.346	.115	.183	.183	.192	.26	.26
Average back of queue (veh)	40.4	33.7	91	42.5	58.6	98.1	42.3	49.8	28.3	55.3	73.5	78.9
Uniform delay (s)	39.2	35.2	28	35.4	28.6	24	41.5	37.5	39.4	36.5	31.5	30
Incremental delay (s)	.3	3.3	0	1.7	.9	0	0	.1	5.8	0	0	0
Initial queue delay (s)	0	0	0	0	0	0	0	0	0	0	0	0
Delay (s)	39.5	38.5	28	37.1	29.4	24	41.5	37.5	45.3	36.5	31.5	30
LOS	D	D	C	D	C	C	D	D	D	D	C	C
Approach delay (s)/LOS	38.6	/	D	31.4	/	C	40.2	/	D	32.9	/	C
Intersection delay (s)/ LOS	35			/			C					

©Catalina Engineering, Inc.

HiCAP 2000 - Graphical Output

File

Delay(s) and LOS by Lane

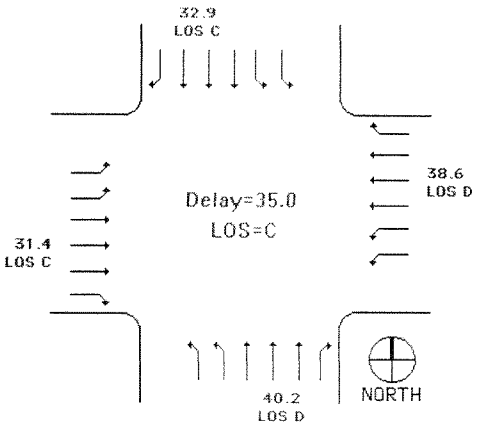

Hourly Movement Volume (veh/h)

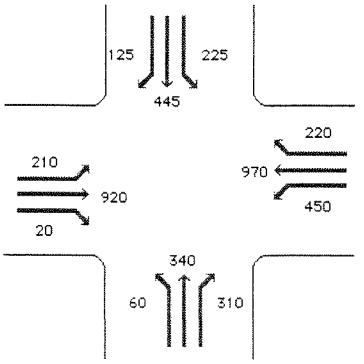

Chapter 16 - Signalized Intersections - Summary of Analysis

Analyst	ANALYST
Agency	OMNI-MEANS
Date	12/11/02
Period	AM PEAK
EW Street	KETTLEMEN LN.
NS Street	LOWER SACRAMENTO RD.

Approach	Delay	LOS
EB approach	38.6 s	D
WB approach	31.4 s	C
NB approach	40.2 s	D
SB approach	32.9 s	C

CHAPTER 16 - OPERATIONAL ANALYSIS - SUMMARY WORKSHEET

General Information

Analyst	ANALYST
Agency or Company	OMNI-MEANS
Analysis Period/Year	PM PEAK 2002
Comment	CUMULATIVE

Site Information

Jurisdiction/Date	CITY OF LODI 12/11/02
EB/WB Street	KETTLEMEN
NB/SB Street	LOWER SACR

Intersection Data

Area type Other Analysis period 1 h Signal type Actuated-Field % Back of queue 95

	EB			WB			NB			SB		
	LT	TH	RT	LT	TH	RT	LT	TH	RT	LT	TH	RT
Volume (veh/h)	390	1000	500	220	1090	390	250	820	140	290	530	150
RTOR volume (veh/h)			125			145			110			75
Peak-hour factor	.92	.92	.92	.92	.92	.92	.92	.92	.92	.92	.92	.92
Heavy vehicles (%)	9	9	9	9	9	9	2	2	2	2	2	2
Start-up lost time, l_1 (s)	2	2	2	2	2	2	2	2	2	2	2	2
Extension of effective green, e (s)	2	2	2	2	2	2	2	2	2	2	2	2
Arrival type, AT	3	3	3	3	3	3	3	3	3	3	3	3
Approach pedestrian volume (p/h)	50			50			50			50		
Approach bicycle volume (bic/h)	0			0			0			0		
Left/right parking (Y or N)	N	/	N	N	/	N	N	/	N	N	/	N

Signal Phasing Plan

L: LT T: TH R: RT P: Peds

	Phase 1	Phase 2	Phase 3	Phase 4	Phase 5	Phase 6	Phase 7	Phase 8
EB	L	LTR	TR					
WB	L		TR					
NB				L		TR		
SB				L	LTR	TR		
Green (s)	17	3	30	12	5	23		
Yellow + All red (s)	3	3	3	3	3	3		

Cycle (s) 108 Lost time per cycle (s) 12 Critical v/c Ratio .73

Intersection Performance

	EB			WB			NB			SB		
Lane group configuration	L	T	R	L	T	R	L	T	R	L	T	R
No. of lanes	2	3	1	2	3	1	2	3	1	2	3	1
Flow rate (veh/h)	424	1087	408	239	1185	266	272	891	33	315	576	82
Capacity (veh/h)	685	1583	468	506	1319	386	382	1081	311	636	1456	427
Adjusted saturation flow (veh/h)	3216	4748	1404	3216	4748	1391	3437	5074	1460	3437	5074	1489
v/c ratio	.619	.687	.871	.472	.898	.689	.712	.825	.105	.495	.396	.191
g/C ratio	.213	.333	.333	.157	.278	.278	.111	.213	.213	.185	.287	.287
Average back of queue (veh)	39	51.8	29.6	37	26.2	38.1	18.4	26.1	70.4	44.8	78.3	88.4
Uniform delay (s)	38.5	31.1	33.8	41.4	37.5	34.8	46.3	40.6	34.2	39.5	31	29
Incremental delay (s)	1.7	1.3	19.2	.6	9.6	5.3	6.3	5.6	0	.6	0	0
Initial queue delay (s)	0	0	0	0	0	0	0	0	0	0	0	0
Delay (s)	40.3	32.4	53	42	47.2	40.1	52.7	46.2	34.2	40.1	31	29
LOS	D	C	D	D	D	D	D	D	C	D	C	C
Approach delay (s)/LOS	38.5	/	D	45.3	/	D	47.3	/	D	33.8	/	C
Intersection delay (s)/ LOS	41.5			/			D					

©Catalina Engineering, Inc.

HCAP 2000 - Graphical Output

File

Delay(s) and LOS by Lane

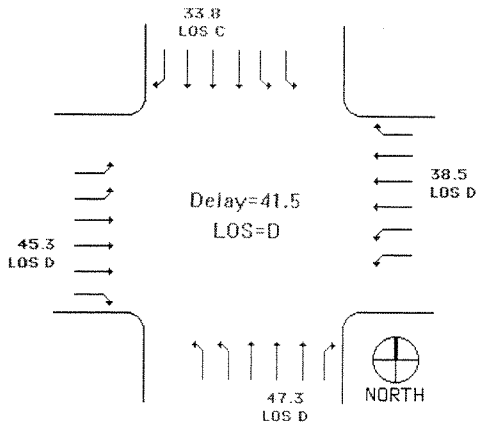

Hourly Movement Volume (veh/h)

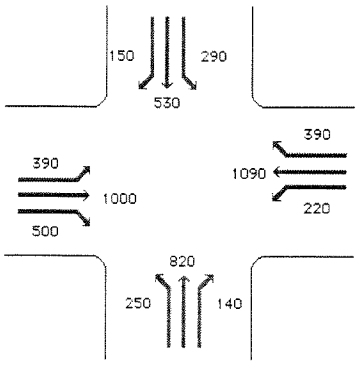

Chapter 16 - Signalized Intersections - Summary of Analysis

Analyst	ANALYST
Agency	OMNI-MEANS
Date	12/11/02
Period	PM PEAK
EW Street	KETTLEMEN LN.
NS Street	LOWER SACRAMENTO RD.

Approach	Delay	LOS
EB approach	38.5 s	D
WB approach	45.3 s	D
NB approach	47.3 s	D
SB approach	33.8 s	C

CHAPTER 16 - OPERATIONAL ANALYSIS - SUMMARY WORKSHEET

General Information

Analyst	PJG
Agency or Company	OMNI-MEANS
Analysis Period/Year	AM PEAK 2002
Comment	CUMULATIVE

Site Information

Jurisdiction/Date	CITY OF LODI 12/11/02
EB/WB Street	KETTLEMEN
NB/SB Street	TIENDA DR.

Intersection Data

Area type Other Analysis period 1 h Signal type Actuated-Field % Back of queue 95

	EB			WB			NB			SB		
	LT	TH	RT	LT	TH	RT	LT	TH	RT	LT	TH	RT
Volume (veh/h)	15	1663	25	105	1525	30	20	15	70	50	35	30
RTOR volume (veh/h)			0			0			0			15
Peak-hour factor	.92	.92	.92	.92	.92	.92	.92	.92	.92	.92	.92	.92
Heavy vehicles (%)	9	9	9	9	9	9	2	2	2	2	2	2
Start-up lost time, l_1 (s)	2	2	2	2	2	2	2	2	2	2	2	2
Extension of effective green, e (s)	2	2	2	2	2	2	2	2	2	2	2	2
Arrival type, AT	3	3	3	3	3	3	3	3	3	3	3	3
Approach pedestrian volume (p/h)	50			50			50			50		
Approach bicycle volume (bic/h)	0			0			0			0		
Left/right parking (Y or N)	N	/	N	N	/	N	N	/	N	N	/	N

Signal Phasing Plan

L: LT T: TH R: RT P: Peds

	Phase 1	Phase 2	Phase 3	Phase 4	Phase 5	Phase 6	Phase 7	Phase 8
EB	L		TR					
WB	L	LTR	TR					
NB				LTR				
SB					LTR			
Green (s)	12	5	49	12	12			
Yellow + All red (s)	3	3	3	3	3			

Cycle (s) 105 Lost time per cycle (s) 12 Critical v/c Ratio .587

Intersection Performance

	EB			WB			NB			SB		
Lane group configuration	L	TR		L	TR		L	TR		L	LT	R
No. of lanes	1	3		2	3		1	1		1	1	1
Flow rate (veh/h)	16	1835		114	1690		22	92		36	56	16
Capacity (veh/h)	189	2203		613	2561		202	165		202	202	156
Adjusted saturation flow (veh/h)	1656	4722		3216	4718		1770	1445		1770	1766	1368
v/c ratio	.086	.833		.186	.66		.107	.56		.18	.277	.104
g/C ratio	.114	.467		.19	.543		.114	.114		.114	.114	.114
Average back of queue (veh)	43.7	49.3		63.8	85.6		45.7	21.1		42.5	38.1	35.5
Uniform delay (s)	41.6	24.4		35.7	17.1		41.7	44		42.1	42.5	41.7
Incremental delay (s)	0	3		0	.6		0	4.3		0	0	0
Initial queue delay (s)	0	0		0	0		0	0		0	0	0
Delay (s)	41.6	27.4		35.7	17.7		41.7	48.3		42.1	42.5	41.7
LOS	D	C		D	B		D	D		D	D	D
Approach delay (s)/LOS	27.5	/	C	18.9	/	B	47	/	D	42.2	/	D
Intersection delay (s)/ LOS	24.5					/				C		

©Catalina Engineering, Inc.

HiCAP 2000 - Graphical Output

File

Delay(s) and LOS by Lane

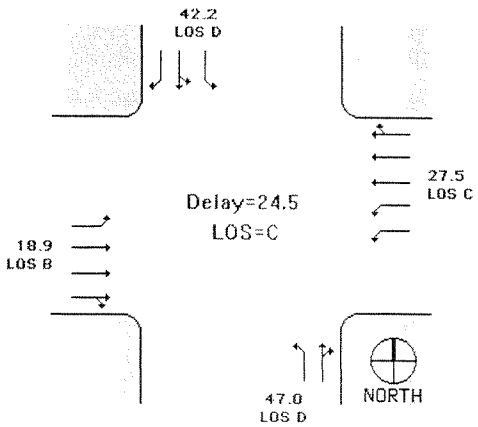

Hourly Movement Volume (veh/h)

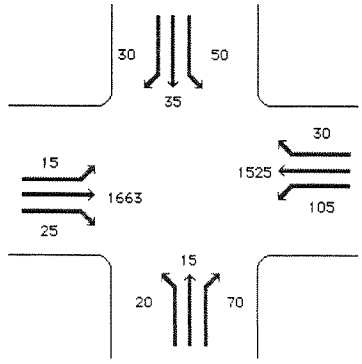

Chapter 16 - Signalized Intersections - Summary of Analysis

Analyst	PJG
Agency	OMNI-MEANS
Date	12/11/02
Period	AM PEAK
EW Street	KETTLEMEN LN.
NS Street	TIENDA DR

Approach	Delay	LOS
EB approach	27.5 s	C
WB approach	18.9 s	B
NB approach	47.0 s	D
SB approach	42.2 s	D

CHAPTER 16 - OPERATIONAL ANALYSIS - SUMMARY WORKSHEET

General Information

Analyst: ANALYST
Agency or Company: OMNI-MEANS
Analysis Period/Year: PM PEAK 2002
Comment: CUMULATIVE

Site Information

Jurisdiction/Date: CITY OF LODI 12/11/02
EB/WB Street: KETTLEMEN
NB/SB Street: TIENDA DR.

Intersection Data

Area type: Other Analysis period: 1 h Signal type: Actuated-Field % Back of queue: 95

	EB			WB			NB			SB		
	LT	TH	RT	LT	TH	RT	LT	TH	RT	LT	TH	RT
Volume (veh/h)	120	1150	60	380	1450	140	90	60	270	120	110	60
RTOR volume (veh/h)			0			0			0			30
Peak-hour factor	.92	.92	.92	.92	.92	.92	.92	.92	.92	.92	.92	.92
Heavy vehicles (%)	9	9	9	9	9	9	2	2	2	2	2	2
Start-up lost time, l_1 (s)	2	2	2	2	2	2	2	2	2	2	2	2
Extension of effective green, e (s)	2	2	2	2	2	2	2	2	2	2	2	2
Arrival type, AT	3	3	3	3	3	3	3	3	3	3	3	3
Approach pedestrian volume (p/h)	50			50			50			50		
Approach bicycle volume (bic/h)	0			0			0			0		
Left/right parking (Y or N)	N	/	N	N	/	N	N	/	N	N	/	N

Signal Phasing Plan

L: LT T: TH R: RT P: Peds

	Phase 1	Phase 2	Phase 3	Phase 4	Phase 5	Phase 6	Phase 7	Phase 8
EB	L		TR					
WB	L	LTR	TR					
NB				LTR				
SB					LTR			
Green (s)	12	4	40	32	13			
Yellow + All red (s)	3	3	3	3	3			

Cycle (s): 116 Lost time per cycle (s): 12 Critical v/c Ratio: .86

Intersection Performance

	EB			WB			NB			SB		
Lane group configuration	L	TR		L	TR		L	TR		L	LT	R
No. of lanes	1	3		2	3		1	1		1	1	1
Flow rate (veh/h)	130	1315		413	1728		98	359		87	163	33
Capacity (veh/h)	171	1615		527	1883		488	427		198	204	152
Adjusted saturation flow (veh/h)	1656	4684		3216	4648		1770	1549		1770	1822	1361
v/c ratio	.761	.814		.784	.918		.2	.839		.441	.796	.214
g/C ratio	.103	.345		.164	.405		.276	.276		.112	.112	.112
Average back of queue (veh)	15.2	40.2		21.9	36.1		100.1	30.4		30.6	16.7	31
Uniform delay (s)	50.6	34.6		46.5	32.7		32.2	39.6		48.1	50.2	46.9
Incremental delay (s)	20.1	3.4		8.1	8.8		0	15.6		.9	22.2	0
Initial queue delay (s)	0	0		0	0		0	0		0	0	0
Delay (s)	70.7	38.1		54.6	41.4		32.2	55.2		49	72.4	46.9
LOS	E	D		D	D		C	E		D	E	D
Approach delay (s)/LOS	41	/	D	44	/	D	50.3	/	D	62.2	/	E
Intersection delay (s)/ LOS	44.8						/			D		

©Catalina Engineering, Inc.

HiCAP 2000 - Graphical Output

File

Delay(s) and LOS by Lane

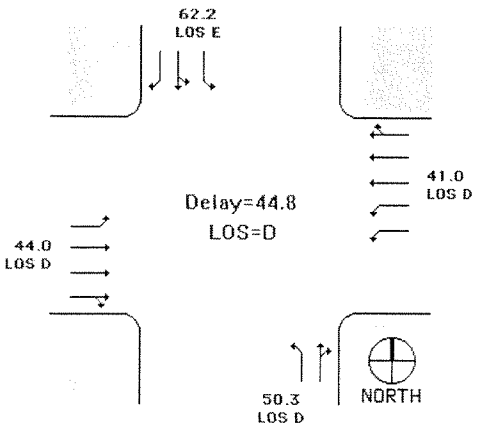

Hourly Movement Volume (veh/h)

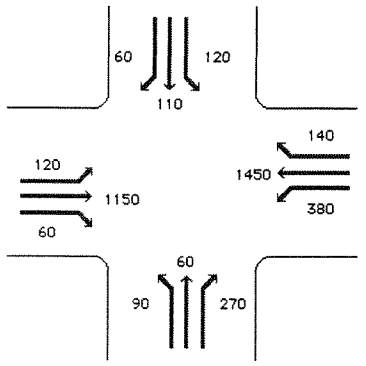

Chapter 16 - Signalized Intersections - Summary of Analysis

Analyst	ANALYST
Agency	OMNI-MEANS
Date	12/11/02
Period	PM PEAK
EW Street	KETTLEMEN LN.
NS Street	TIENDA DR.

Approach	Delay	LOS
EB approach	41.0 s	D
WB approach	44.8 s	D
NB approach	50.3 s	D
SB approach	62.2 s	E

CHAPTER 16 - OPERATIONAL ANALYSIS - SUMMARY WORKSHEET

General Information

Analyst	ANALYST		
Agency or Company	OMNI-MEANS		
Analysis Period/Year	AM PEAK	2002	
Comment	CUMULATIVE		

Site Information

Jurisdiction/Date	CITY OF LODI	12/11/02
EB/WB Street	KETTLEMEN	
NB/SB Street	S. MILLS A	

Intersection Data

Area type Other Analysis period 1 h Signal type Actuated-Field % Back of queue 95

	EB			WB			NB			SB		
	LT	TH	RT	LT	TH	RT	LT	TH	RT	LT	TH	RT
Volume (veh/h)	20	1568	55	40	1315	45	135	130	45	85	60	35
RTOR volume (veh/h)			0			0			0			20
Peak-hour factor	.92	.92	.92	.92	.92	.92	.92	.92	.92	.92	.92	.92
Heavy vehicles (%)	9	9	9	9	9	9	2	2	2	2	2	2
Start-up lost time, l_1 (s)	2	2	2	2	2	2	2	2	2	2	2	2
Extension of effective green, e (s)	2	2	2	2	2	2	2	2	2	2	2	2
Arrival type, AT	3	3	3	3	3	3	3	3	3	3	3	3
Approach pedestrian volume (p/h)	50			50			50			50		
Approach bicycle volume (bic/h)	0			0			0			0		
Left/right parking (Y or N)	N	/	N	N	/	N	N	/	N	N	/	N

Signal Phasing Plan

L: LT T: TH R: RT P: Peds

	Phase 1	Phase 2	Phase 3	Phase 4	Phase 5	Phase 6	Phase 7	Phase 8
EB	L		TR					
WB	L	LTR	TR					
NB				L	LTR	TR		
SB				L		TR		
Green (s)	12	5	49	12	5	11		
Yellow + All red (s)	3	3	3	3	3	3		

Cycle (s) 112 Lost time per cycle (s) 12 Critical v/c Ratio .631

Intersection Performance

	EB			WB			NB			SB		
Lane group configuration	L	TR		L	TR		L	TR		L	T	R
No. of lanes	1	3		1	3		1	1		1	1	1
Flow rate (veh/h)	22	1764		43	1478		147	190		92	65	16
Capacity (veh/h)	177	2057		296	2394		316	295		190	183	133
Adjusted saturation flow (veh/h)	1656	4703		1656	4705		1770	1737		1770	1863	1355
v/c ratio	.123	.857		.147	.617		.464	.646		.487	.356	.123
g/C ratio	.107	.438		.179	.509		.179	.17		.107	.098	.098
Average back of queue (veh)	39.6	44.4		64.3	88.4		46.7	32.3		27.3	31.5	29.7
Uniform delay (s)	45.2	28.4		38.8	19.7		41.2	43.4		47.1	47.2	46.1
Incremental delay (s)	0	4		0	.5		.8	4.9		1.8	0	0
Initial queue delay (s)	0	0		0	0		0	0		0	0	0
Delay (s)	45.2	32.4		38.8	20.2		42	48.3		48.9	47.2	46.1
LOS	D	C		D	C		D	D		D	D	D
Approach delay (s)/LOS	32.5	/	C	20.7	/	C	45.6	/	D	48	/	D
Intersection delay (s)/ LOS	29.7					/				C		

©Catalina Engineering, Inc.

HCAP 2000 - Graphical Output

File

Delay(s) and LOS by Lane

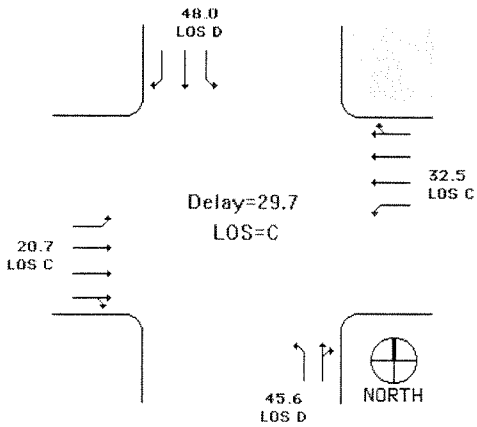

Hourly Movement Volume (veh/h)

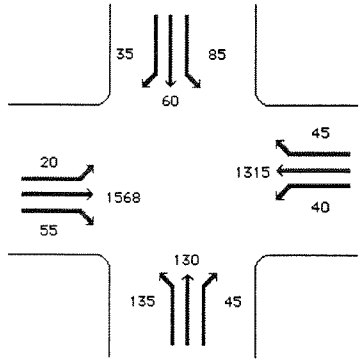

Chapter 16 - Signalized Intersections - Summary of Analysis

Analyst	ANALYST
Agency	OMNI-MEANS
Date	12/11/02
Period	AM PEAK
EW Street	KETTLEMEN LN.
NS Street	S. MILLS AVE.

Approach	Delay	LOS
EB approach	32.5 s	C
WB approach	20.7 s	C
NB approach	45.6 s	D
SB approach	48.0 s	D

CHAPTER 16 - OPERATIONAL ANALYSIS - SUMMARY WORKSHEET

General Information

Analyst: ANALYST
Agency or Company: OMNI-MEANS
Analysis Period/Year: PM PEAK 2002
Comment: CUMULATIVE

Site Information

Jurisdiction/Date: CITY OF LODI 12/11/02
EB/WB Street: KETTLEMEN
NB/SB Street: S. MILLS A

Intersection Data

Area type: Other Analysis period: 1 h Signal type: Actuated-Field % Back of queue: 95

	EB			WB			NB			SB		
	LT	TH	RT	LT	TH	RT	LT	TH	RT	LT	TH	RT
Volume (veh/h)	100	1280	70	70	1820	80	80	90	50	80	80	70
RTOR volume (veh/h)			0			0			0			44
Peak-hour factor	.92	.92	.92	.92	.92	.92	.92	.92	.92	.92	.92	.92
Heavy vehicles (%)	9	9	9	9	9	9	2	2	2	2	2	2
Start-up lost time, l_1 (s)	2	2	2	2	2	2	2	2	2	2	2	2
Extension of effective green, e (s)	2	2	2	2	2	2	2	2	2	2	2	2
Arrival type, AT	3	3	3	3	3	3	3	3	3	3	3	3
Approach pedestrian volume (p/h)	50			50			50			50		
Approach bicycle volume (bic/h)	0			0			0			0		
Left/right parking (Y or N)	N	/	N	N	/	N	N	/	N	N	/	N

Signal Phasing Plan

L: LT T: TH R: RT P: Peds

	Phase 1	Phase 2	Phase 3	Phase 4	Phase 5	Phase 6	Phase 7	Phase 8
EB	L		TR					
WB	L	LTR	TR					
NB				L	LTR	TR		
SB				L		TR		
Green (s)	8	4	53	10	4	10		
Yellow + All red (s)	3	3	3	3	3	3		

Cycle (s): 107 Lost time per cycle (s): 12 Critical v/c Ratio: .726

Intersection Performance

	EB			WB			NB			SB		
Lane group configuration	L	TR		L	TR		L	TR		L	T	R
No. of lanes	1	3		1	3		1	1		1	1	1
Flow rate (veh/h)	109	1467		76	2065		87	152		87	87	28
Capacity (veh/h)	124	2322		232	2634		281	269		165	174	128
Adjusted saturation flow (veh/h)	1656	4687		1656	4697		1770	1690		1770	1863	1364
v/c ratio	.878	.632		.328	.784		.309	.567		.526	.499	.222
g/C ratio	.075	.495		.14	.561		.159	.159		.093	.093	.093
Average back of queue (veh)	8.3	83		41.2	65.9		51	33.7		22.4	24.5	25.7
Uniform delay (s)	49	19.8		41.5	18.4		39.8	41.6		46.2	46.1	44.9
Incremental delay (s)	65.3	.6		0	1.6		0	2.8		3.1	2.3	0
Initial queue delay (s)	0	0		0	0		0	0		0	0	0
Delay (s)	114.3	20.4		41.5	20.1		39.8	44.4		49.4	48.4	44.9
LOS	F	C		D	C		D	D		D	D	D
Approach delay (s)/LOS	26.9	/	C	20.8	/	C	42.7	/	D	48.3	/	D
Intersection delay (s)/ LOS	25.7					/				C		

©Catalina Engineering, Inc.

HiCAP 2000 - Graphical Output

File

Delay(s) and LOS by Lane

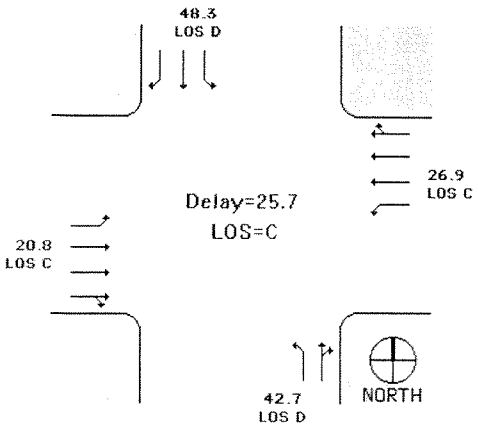

Hourly Movement Volume (veh/h)

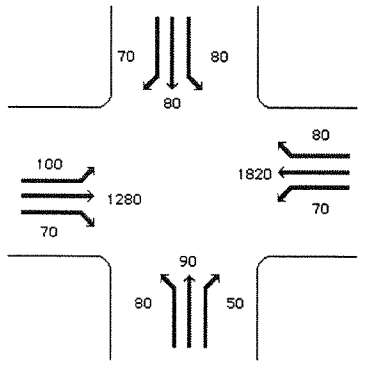

Chapter 16 - Signalized Intersections - Summary of Analysis

Analyst	ANALYST
Agency	OMNI-MEANS
Date	12/11/02
Period	PM PEAK
EW Street	KETTLEMEN LN.
NS Street	S. MILLS AVE.

Approach	Delay	LOS
EB approach	26.9 s	C
WB approach	20.8 s	C
NB approach	42.7 s	D
SB approach	48.3 s	D

CHAPTER 16 - OPERATIONAL ANALYSIS - SUMMARY WORKSHEET

General Information

Analyst	PJG		
Agency or Company	OMNI-MEANS		
Analysis Period/Year	AM PEAK	2002	
Comment	CUMULATIVE		

Site Information

Jurisdiction/Date	CITY OF LODI	12/11/02
EB/WB Street	KETTLEMEN	
NB/SB Street	ROAD A	

Intersection Data

Area type Other Analysis period 1 h Signal type Actuated-Field % Back of queue 95

	EB			WB			NB			SB		
	LT	TH	RT	LT	TH	RT	LT	TH	RT	LT	TH	RT
Volume (veh/h)	43	949	24	65	965	125	40	30	134	67	15	20
RTOR volume (veh/h)			20			35			30			0
Peak-hour factor	.92	.92	.92	.92	.92	.92	.92	.92	.92	.92	.92	.92
Heavy vehicles (%)	2	2	2	2	2	2	2	2	2	2	2	2
Start-up lost time, l_1 (s)	2	2	2	2	2	2	2	2	2	2	2	2
Extension of effective green, e (s)	2	2	2	2	2	2	2	2	2	2	2	2
Arrival type, AT	3	3	3	3	3	3	3	3	3	3	3	3
Approach pedestrian volume (p/h)	50			50			50			50		
Approach bicycle volume (bic/h)	0			0			0			0		
Left/right parking (Y or N)	N	/	N	N	/	N	N	/	N	N	/	N

Signal Phasing Plan

L: LT T: TH R: RT P: Peds

	Phase 1	Phase 2	Phase 3	Phase 4	Phase 5	Phase 6	Phase 7	Phase 8
EB	L		TR					
WB	L	LTR	TR					
NB				L		TR		
SB				L	LTR	TR		
Green (s)	10	4	36	10	4	16		
Yellow + All red (s)	3	3	3	3	3	3		

Cycle (s) 98 Lost time per cycle (s) 12 Critical v/c Ratio .403

Intersection Performance

	EB			WB			NB			SB		
Lane group configuration	L	TR		L	TR		L	T	R	L	TR	
No. of lanes	1	3		2	3		1	1	1	1	1	
Flow rate (veh/h)	47	1032		71	1049		43	33	113	73	38	
Capacity (veh/h)	181	1859		596	2221		181	304	233	307	382	
Adjusted saturation flow (veh/h)	1770	5061		3437	5061		1770	1863	1427	1770	1628	
v/c ratio	.259	.555		.119	.472		.241	.107	.485	.237	.1	
g/C ratio	.102	.367		.173	.439		.102	.163	.163	.173	.235	
Average back of queue (veh)	34.7	77.1		66.5	104.9		35.4	68.7	33.1	60.4	86.9	
Uniform delay (s)	40.6	24.6		34.2	19.5		40.5	34.9	37.3	34.9	29.4	
Incremental delay (s)	0	.4		0	.1		0	0	1.4	0	0	
Initial queue delay (s)	0	0		0	0		0	0	0	0	0	
Delay (s)	40.6	25		34.2	19.6		40.5	34.9	38.7	34.9	29.4	
LOS	D	C		C	B		D	C	D	C	C	
Approach delay (s)/LOS	25.7	/	C	20.5	/	C	38.5	/	D	33	/	C
Intersection delay (s)/ LOS	24.7					/				C		

©Catalina Engineering, Inc.

HCAP 2000 - Graphical Output

File

Delay(s) and LOS by Lane

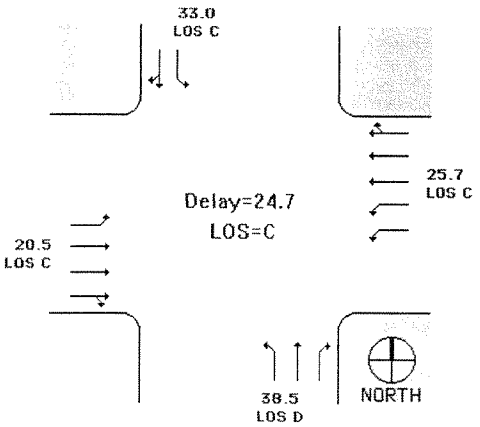

Hourly Movement Volume (veh/h)

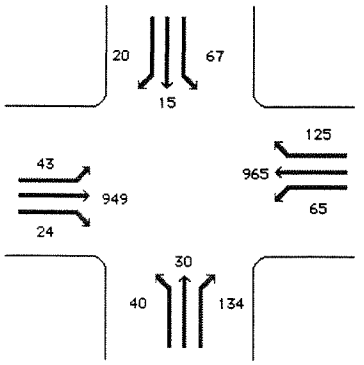

Chapter 16 - Signalized Intersections - Summary of Analysis

Analyst	PJG
Agency	OMNI-MEANS
Date	12/11/02
Period	AM PEAK
EW Street	KETTLEMEN LN.
NS Street	ROAD A

Approach	Delay	LOS
EB approach	25.7 s	C
WB approach	20.5 s	C
NB approach	38.5 s	D
SB approach	33.0 s	C

CHAPTER 16 - OPERATIONAL ANALYSIS - SUMMARY WORKSHEET

General Information

Analyst: PJG
Agency or Company: OMNI-MEANS
Analysis Period/Year: PM PEAK 2002
Comment: CUMULATIVE

Site Information

Jurisdiction/Date: CITY OF LODI 12/11/02
EB/WB Street: KETTLEMEN
NB/SB Street: ROAD A

Intersection Data

Area type: Other Analysis period: 1 h Signal type: Actuated-Field % Back of queue: 95

	EB			WB			NB			SB		
	LT	TH	RT	LT	TH	RT	LT	TH	RT	LT	TH	RT
Volume (veh/h)	69	1710	50	160	1160	170	32	25	110	70	40	26
RTOR volume (veh/h)			0			0						0
Peak-hour factor	.92	.92	.92	.92	.92	.92	.92	.92	.92	.92	.92	.92
Heavy vehicles (%)	2	2	2	2	2	2	2	2	2	2	2	2
Start-up lost time, l_1 (s)	2	2	2	2	2	2	2	2	2	2	2	2
Extension of effective green, e (s)	2	2	2	2	2	2	2	2	2	2	2	2
Arrival type, AT	3	3	3	3	3	3	3	3	3	3	3	3
Approach pedestrian volume (p/h)	50			50						50		
Approach bicycle volume (bic/h)	0			0						0		
Left/right parking (Y or N)	N	/	N	N	/	N		/		N	/	N

Signal Phasing Plan

L: LT T: TH R: RT P: Peds

	Phase 1	Phase 2	Phase 3	Phase 4	Phase 5	Phase 6	Phase 7	Phase 8
EB	L		TR					
WB	L	LTR	TR					
NB				L		TR		
SB				L	LTR	TR		
Green (s)	10	4	60	8	4	16		
Yellow + All red (s)	3	3	3	3	3	3		

Cycle (s): 120 Lost time per cycle (s): 12 Critical v/c Ratio: .596

Intersection Performance

	EB			WB			NB			SB		
Lane group configuration	L	TR		L	TR		L	T	R	L	TR	
No. of lanes	1	3		2	3		1	1	1	1	1	
Flow rate (veh/h)	75	1859		174	1261		35	27	120	76	43	
Capacity (veh/h)	147	2530		487	2826		118	248	211	221	354	
Adjusted saturation flow (veh/h)	1770	5061		3437	5061		1770	1863	1583	1770	1848	
v/c ratio	.509	.735		.357	.446		.295	.109	.566	.344	.123	
g/C ratio	.083	.5		.142	.558		.067	.133	.133	.125	.192	
Average back of queue (veh)	20.8	74.3		41.9	139.3		22	56.1	27	38.8	79	
Uniform delay (s)	52.6	23.7		46.6	15.6		53.3	45.7	48.7	48	40.1	
Incremental delay (s)	2.9	1.2		0	.1					0	0	
Initial queue delay (s)	0	0		0	0		0	0	0	0	0	
Delay (s)	55.6	24.9		46.6	15.7		53.3	45.7	48.7	48	40.1	
LOS	E	C		D	B		D	D	D	D	D	
Approach delay (s)/LOS	26	/	C	19.4	/	B	49.2	/	D	45.1	/	D
Intersection delay (s)/ LOS	25.2					/				C		

©Catalina Engineering, Inc.

HiCAP 2000 - Graphical Output

File

Delay(s) and LOS by Lane

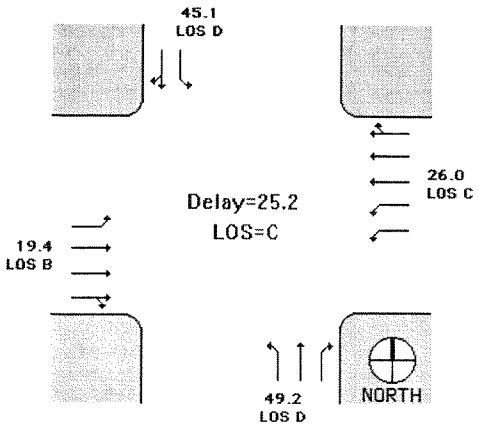

Hourly Movement Volume (veh/h)

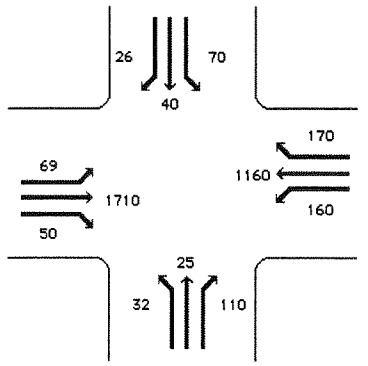

Chapter 16 - Signalized Intersections - Summary of Analysis

Analyst	PJG
Agency	OMNI-MEANS
Date	12/11/02
Period	PM PEAK
EW Street	KETTLEMEN LN.
NS Street	ROAD A

Approach	Delay	LOS
EB approach	26.0 s	C
WB approach	19.4 s	B
NB approach	49.2 s	D
SB approach	45.1 s	D

-Cumulative + Project Year 2020 LOS Calculations-

CHAPTER 17 - TWSC - UNSIGNALIZED INTERSECTIONS WORKSHEET

Analysis Summary

General Information

Analyst	PJG
Agency or Company	OMNI-MEANS
Analysis Period/Year	AM PEAK 2002
Comment	C+PRJ.

Site Information

Jurisdiction/Date	CITY OF LODI 12/11/02
Major Street	LOWER SACRAMENTO RD.
Minor Street	TAYLOR ROA

Input Data

Lane Configuration	SB	NB	EB	WB
Lane 1 (curb)	TR	T	R	
Lane 2	T	T		
Lane 3		L		

	SB			NB			EB			WB		
Movement	1 (LT)	2 (TH)	3 (RT)	4 (LT)	5 (TH)	6 (RT)	7 (LT)	8 (TH)	9 (RT)	10 (LT)	11 (TH)	12 (RT)
Volume (veh/h)		858	15	13	1035				15			
PHF	.9	.9	.9	0	.9	.9	.9	.9	.9	.9	.9	.9
Proportion of heavy vehicles, HV	3	3	3	3	3	3	3	3	3	3	3	3
Flow rate	0	953	17	0	1150	0	0	0	17	0	0	0
Flare storage (# of vehs)									0			0
Median storage (# of vehs)							0			0		

Signal upstream of Movement 2 _____ ft Movement 5 _____ ft

Length of study period (h) 1

Output Data

	Lane	Movement	Flow Rate (veh/h)	Capacity (veh/h)	v/c	Queue Length (veh)	Control Delay (s)	LOS	Approach Delay and LOS
EB	1	R	15	525	.029	<1	12.1	B	12.1
	2								
	3								B
WB	1								
	2								
	3								
		1	0						
		4	0	700	0	0	0		

©Catalina Engineering, Inc.

HICAP 2000 - Graphical Output

File

Delay(s) and LOS by Lane

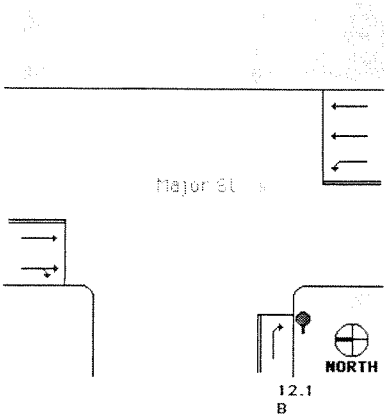

Hourly Movement Volume (veh/h)

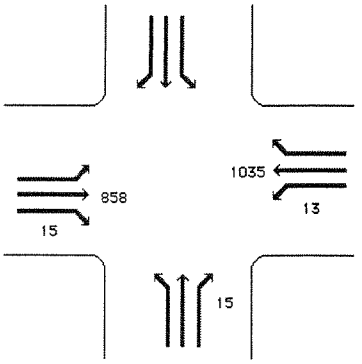

Chapter 17 - TWSC - Summary of Analysis

Analyst	PJG
Agency	OMNI-MEANS
Date	12/11/02
Period	AM PEAK
Major St.	LOWER SACRAMENTO RD.
Minor St.	TAYLOR ROAD

Approach	Delay	LOS
Minor St. (EB)	12.1 s	B
Minor St. (WB)	s	
Major LT (SB)	s	
Major LT (NB)	0 s	

CHAPTER 17 - TWSC - UNSIGNALIZED INTERSECTIONS WORKSHEET

Analysis Summary

General Information

Analyst	PJG		
Agency or Company	OMNI-MEANS		
Analysis Period/Year	PM PEAK	2002	
Comment	C+PRJ		

Site Information

Jurisdiction/Date	CITY OF LODI	12/11/02
Major Street	LOWER SACRAMENTO RD.	
Minor Street	TAYLOR ROA	

Input Data

Lane Configuration	SB	NB	EB	WB
Lane 1 (curb)	TR	T	R	
Lane 2	T	T		
Lane 3		L		

	SB			NB			EB			WB		
Movement	1 (LT)	2 (TH)	3 (RT)	4 (LT)	5 (TH)	6 (RT)	7 (LT)	8 (TH)	9 (RT)	10 (LT)	11 (TH)	12 (RT)
Volume (veh/h)		1023	10	10	1597				10			
PHF	.9	.9	.9	0	.9	.9	.9	.9	.9	.9	.9	.9
Proportion of heavy vehicles, HV	3	3	3	3	3	3	3	3	3	3	3	3
Flow rate	0	1137	11	0	1774	0	0	0	11	0	0	0
Flare storage (# of vehs)									0			0
Median storage (# of vehs)							0			0		

Signal upstream of Movement 2 _____ ft Movement 5 _____ ft

Length of study period (h) 1

Output Data

	Lane	Movement	Flow Rate (veh/h)	Capacity (veh/h)	v/c	Queue Length (veh)	Control Delay (s)	LOS	Approach Delay and LOS
EB	1	R	10	459	.022	<1	13	B	13
	2								
	3								B
WB	1								
	2								
	3								
		1	0						
		4	0	599	0	0	0		

©Catalina Engineering, Inc.

HCS2000 - Graphical Output

File

Delay(s) and LOS by Lane

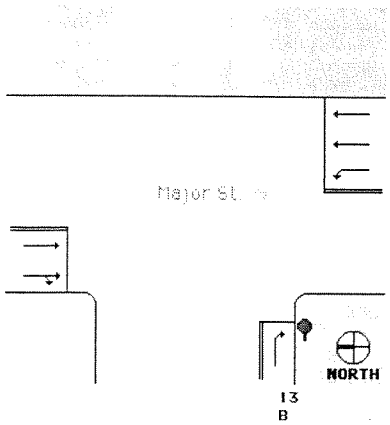

Hourly Movement Volume (veh/h)

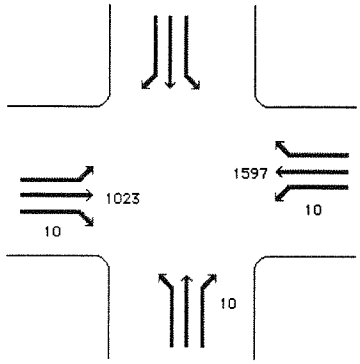

Chapter 17 - TWSC - Summary of Analysis

Analyst	PJG
Agency	OMNI-MEANS
Date	12/11/02
Period	PM PEAK
Major St.	LOWER SACRAMENTO RD.
Minor St.	TAYLOR ROAD

Approach	Delay	LOS
Minor St. (EB)	13.0 s	B
Minor St. (WB)	s	
Major LT (SB)	s	
Major LT (NB)	0 s	

CHAPTER 16 - OPERATIONAL ANALYSIS - SUMMARY WORKSHEET

General Information

Analyst	ANALYST		
Agency or Company	OMNI-MEANS		
Analysis Period/Year	AM PEAK	2002	
Comment	C+PRJ		

Site Information

Jurisdiction/Date	CITY OF LODI	12/11/02
EB/WB Street	SUNSET SAF	
NB/SB Street	LOWER SACR	

Intersection Data

Area type: Other Analysis period: 1 h Signal type: Actuated-Field % Back of queue: 95

	EB			WB			NB			SB		
	LT	TH	RT	LT	TH	RT	LT	TH	RT	LT	TH	RT
Volume (veh/h)	124	0	51	20	0	24	93	755	12	49	771	145
RTOR volume (veh/h)						0			0			0
Peak-hour factor	.92	.92	.92	.92	.92	.92	.92	.92	.92	.92	.92	.92
Heavy vehicles (%)	2	2	2	2	2	2	2	2	2	2	2	2
Start-up lost time, l_1 (s)	2	2	2	2	2	2	2	2	2	2	2	2
Extension of effective green, e (s)	2	2	2	2	2	2	2	2	2	2	2	2
Arrival type, AT	3	3	3	3	3	3	3	3	3	3	3	3
Approach pedestrian volume (p/h)					50			50			50	
Approach bicycle volume (bic/h)					0			0			0	
Left/right parking (Y or N)		/		N	/	N	N	/	N	N	/	N

Signal Phasing Plan

L: LT T: TH R: RT P: Peds

	Phase 1	Phase 2	Phase 3	Phase 4	Phase 5	Phase 6	Phase 7	Phase 8
EB	LTR							
WB	LTR							
NB		L	LTR	TR				
SB		L		TR				
Green (s)	25	17	5	45				
Yellow + All red (s)	3	3	3	3				

Cycle (s): 104 Lost time per cycle (s): 9 Critical v/c Ratio: .325

Intersection Performance

	EB			WB			NB			SB		
Lane group configuration		LT	R		LT	R	L	T	R	L	TR	
No. of lanes		1	1		1	1	1	2	1	1	3	
Flow rate (veh/h)			55		0	26	101	821	13	53	838	
Capacity (veh/h)		69	381		69	354	425	1807	761	289	2190	
Adjusted saturation flow (veh/h)		16317	1583		2405	1473	1770	3547	1494	1770	5061	
v/c ratio			.146		0	.074	.238	.454	.017	.184	.383	
g/C ratio		.24	.24		.24	.24	.24	.51	.51	.163	.433	
Average back of queue (veh)			82.6			82.6	83.6	131.5	187.3	60.4	118.5	
Uniform delay (s)			31.1		30	30.5	31.8	16.3	12.6	37.5	20.1	
Incremental delay (s)					0	0	0	.1	0	0	0	
Initial queue delay (s)			0			0	0	0	0	0	0	
Delay (s)			31.1		30	30.5	31.8	16.4	12.6	37.5	20.1	
LOS			C		C	C	C	B	B	D	C	
Approach delay (s)/LOS	31.1	/	C	30.5	/	C	18	/	B	21.1	/	C
Intersection delay (s)/ LOS			20				/			B		

©Catalina Engineering, Inc.

HCAP 2000 - Graphical Output

File

Delay(s) and LOS by Lane

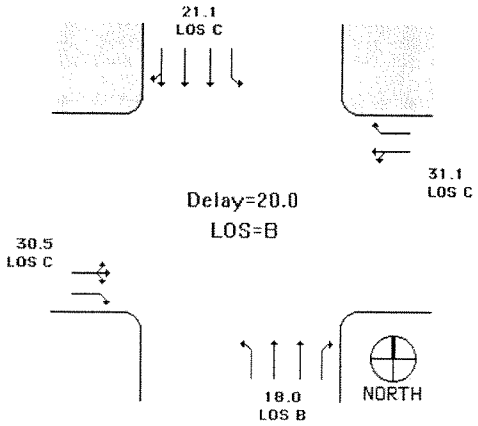

Hourly Movement Volume (veh/h)

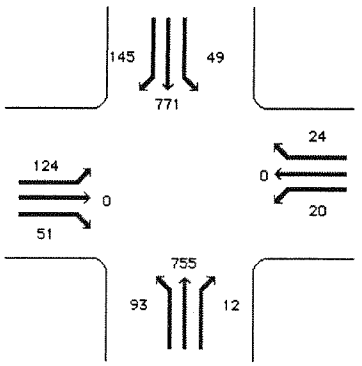

Chapter 16 - Signalized Intersections - Summary of Analysis

Analyst	ANALYST
Agency	OMNI-MEANS
Date	12/11/02
Period	AM PEAK
EW Street	SUNSET SAFEWAY DRVWY.
NS Street	LOWER SACRAMENTO RD.

Approach	Delay	LOS
EB approach	31.1 s	C
WB approach	30.5 s	C
NB approach	18.0 s	B
SB approach	21.1 s	C

CHAPTER 16 - OPERATIONAL ANALYSIS - SUMMARY WORKSHEET

General Information

Analyst	ANALYST		
Agency or Company	OMNI-MEANS		
Analysis Period/Year	PM PEAK	2002	
Comment	C+PRJ		

Site Information

Jurisdiction/Date	CITY OF LODI	12/11/02
EB/WB Street	SUNSET SAF	
NB/SB Street	LOWER SACR	

Intersection Data

Area type Other Analysis period 1 h Signal type Actuated-Field % Back of queue 95

	EB			WB			NB			SB		
	LT	TH	RT	LT	TH	RT	LT	TH	RT	LT	TH	RT
Volume (veh/h)	253	0	111	25	0	93	151	1510	51	74	940	145
RTOR volume (veh/h)						0			0			0
Peak-hour factor	.92	.92	.92	.92	.92	.92	.92	.92	.92	.92	.92	.92
Heavy vehicles (%)	2	2	2	2	2	2	2	2	2	2	2	2
Start-up lost time, l_1 (s)	2	2	2	2	2	2	2	2	2	2	2	2
Extension of effective green, e (s)	2	2	2	2	2	2	2	2	2	2	2	2
Arrival type, AT	3	3	3	3	3	3	3	3	3	3	3	3
Approach pedestrian volume (p/h)					50			50			50	
Approach bicycle volume (bic/h)					0			0			0	
Left/right parking (Y or N)		/		N	/	N	N	/	N	N	/	N

Signal Phasing Plan

L: LT T: TH R: RT P: Peds

	Phase 1	Phase 2	Phase 3	Phase 4	Phase 5	Phase 6	Phase 7	Phase 8
EB	LTR							
WB	LTR							
NB		L	LTR	TR				
SB		L		TR				
Green (s)	25	17	5	45				
Yellow + All red (s)	3	3	3	3				

Cycle (s) 104 Lost time per cycle (s) 9 Critical v/c Ratio .64

Intersection Performance

	EB			WB			NB			SB		
Lane group configuration		LT	R		LT	R	L	T	R	L	TR	
No. of lanes		1	1		1	1	1	2	1	1	3	
Flow rate (veh/h)			121		0	101	164	1641	55	80	1022	
Capacity (veh/h)		69	381		69	354	425	1807	761	289	2190	
Adjusted saturation flow (veh/h)		16317	1583		2405	1473	1770	3547	1494	1770	5061	
v/c ratio			.317		0	.285	.386	.908	.073	.278	.467	
g/C ratio		.24	.24		.24	.24	.24	.51	.51	.163	.433	
Average back of queue (veh)			68.1			65.8	69.6	48.5	177.3	54.4	104.9	
Uniform delay (s)			32.5		30	32.2	33.1	23.3	13	38.1	21	
Incremental delay (s)					0	0	.1	8	0	0	.1	
Initial queue delay (s)			0			0	0	0	0	0	0	
Delay (s)			32.5		30	32.2	33.2	31.3	13	38.1	21.1	
LOS			C		C	C	C	C	B	D	C	
Approach delay (s)/LOS	32.5	/	C	32.2	/	C	30.9	/	C	22.3	/	C
Intersection delay (s)/ LOS			28.1			/				C		

©Catalina Engineering, Inc.

HCS2000 - Graphical Output

File

Delay(s) and LOS by Lane

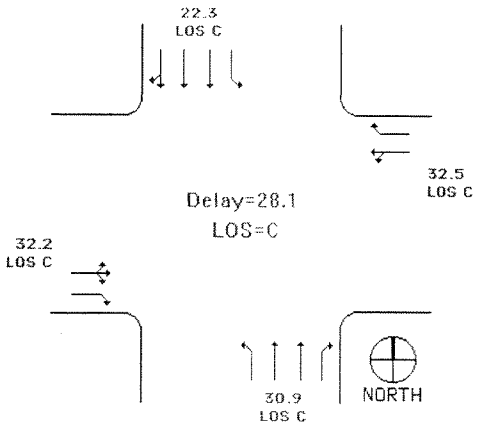

Hourly Movement Volume (veh/h)

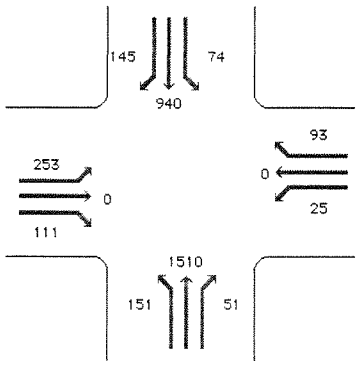

Chapter 16 - Signalized Intersections - Summary of Analysis

Analyst	ANALYST
Agency	OMNI-MEANS
Date	12/11/02
Period	PM PEAK
EW Street	SUNSET SAFEWAY DRVWY.
NS Street	LOWER SACRAMENTO RD.

Approach	Delay	LOS
EB approach	32.5 s	C
WB approach	32.2 s	C
NB approach	30.9 s	C
SB approach	22.3 s	C

CHAPTER 16 - OPERATIONAL ANALYSIS - SUMMARY WORKSHEET

General Information

Analyst	ANALYST
Agency or Company	OMNI-MEANS
Analysis Period/Year	AM PEAK 2002
Comment	C+PRJ

Site Information

Jurisdiction/Date	CITY OF LODI 12/11/02
EB/WB Street	KETTLEMEN
NB/SB Street	LOWER SACR

Intersection Data

Area type Other Analysis period 1 h Signal type Actuated-Field % Back of queue 95

	EB			WB			NB			SB		
	LT	TH	RT	LT	TH	RT	LT	TH	RT	LT	TH	RT
Volume (veh/h)	210	928	29	450	988	239	69	349	310	251	453	125
RTOR volume (veh/h)			15			125			150			55
Peak-hour factor	.92	.92	.92	.92	.92	.92	.92	.92	.92	.92	.92	.92
Heavy vehicles (%)	9	9	9	9	9	9	2	2	2	2	2	2
Start-up lost time, l_1 (s)	2	2	2	2	2	2	2	2	2	2	2	2
Extension of effective green, e (s)	2	2	2	2	2	2	2	2	2	2	2	2
Arrival type, AT	3	3	3	3	3	3	3	3	3	3	3	3
Approach pedestrian volume (p/h)	50			50			50			50		
Approach bicycle volume (bic/h)	0			0			0			0		
Left/right parking (Y or N)	N	/	N	N	/	N	N	/	N	N	/	N

Signal Phasing Plan

L: LT T: TH R: RT P: Peds

	Phase 1	Phase 2	Phase 3	Phase 4	Phase 5	Phase 6	Phase 7	Phase 8
EB	L		TR					
WB	L	LTR	TR					
NB				L		TR		
SB				L	LTR	TR		
Green (s)	17	5	28	12	5	18		
Yellow + All red (s)	3	3	3	3	3	3		

Cycle (s) 103 Lost time per cycle (s) 12 Critical v/c Ratio .638

Intersection Performance

	EB			WB			NB			SB		
Lane group configuration	L	T	R	L	T	R	L	T	R	L	T	R
No. of lanes	2	3	1	2	3	1	2	3	1	2	3	1
Flow rate (veh/h)	228	1009	15	489	1074	124	75	379	174	273	492	76
Capacity (veh/h)	531	1291	378	781	1660	492	400	887	255	667	1281	373
Adjusted saturation flow (veh/h)	3216	4748	1389	3216	4748	1407	3437	5074	1457	3437	5074	1478
v/c ratio	.43	.781	.04	.627	.647	.252	.187	.428	.683	.409	.384	.204
g/C ratio	.165	.272	.272	.243	.35	.35	.117	.175	.175	.194	.252	.252
Average back of queue (veh)	41	34	90.9	43.4	58.4	94.7	41.7	45.8	25.5	53	69.9	76.1
Uniform delay (s)	38.6	34.7	27.6	34.8	28.2	23.9	41.1	37.9	39.8	36.3	31.9	30.3
Incremental delay (s)	.3	3.3	0	1.6	.9	0	0	.2	7.6	.1	0	0
Initial queue delay (s)	0	0	0	0	0	0	0	0	0	0	0	0
Delay (s)	38.9	37.9	27.6	36.4	29.1	23.9	41.1	38.1	47.4	36.5	31.9	30.3
LOS	D	D	C	D	C	C	D	D	D	D	C	C
Approach delay (s)/LOS	38	/	D	30.8	/	C	41	/	D	33.2	/	C
Intersection delay (s)/ LOS	34.8			/						C		

©Catalina Engineering, Inc.

HCAP 2000 - Graphical Output

File

Delay(s) and LOS by Lane

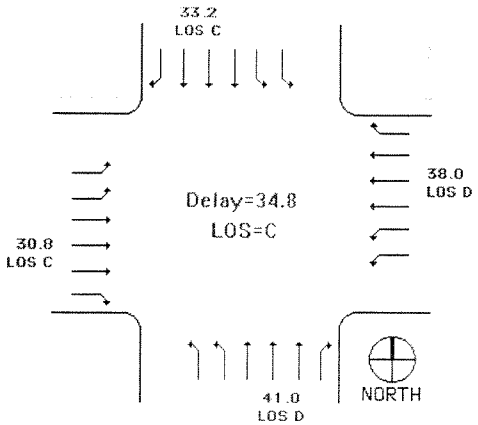

Hourly Movement Volume (veh/h)

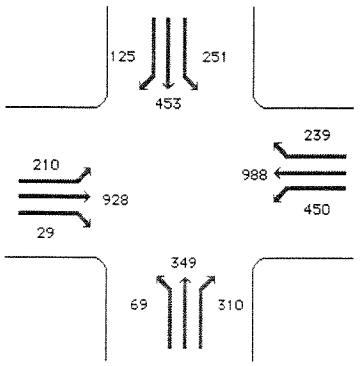

Chapter 16 - Signalized Intersections - Summary of Analysis

Analyst	ANALYST
Agency	OMNI-MEANS
Date	12/11/02
Period	AM PEAK
EW Street	KETTLEMEN LN.
NS Street	LOWER SACRAMENTO RD.

Approach	Delay	LOS
EB approach	38.0 s	D
WB approach	30.8 s	C
NB approach	41.0 s	D
SB approach	33.2 s	C

CHAPTER 16 - OPERATIONAL ANALYSIS - SUMMARY WORKSHEET

General Information

Analyst	ANALYST		
Agency or Company	OMNI-MEANS		
Analysis Period/Year	PM PEAK	2002	
Comment	C+PRJ		

Site Information

Jurisdiction/Date	CITY OF LODI	12/11/02
EB/WB Street	KETTLEMEN	
NB/SB Street	LOWER SACR	

Intersection Data

Area type Other Analysis period 1 h Signal type Actuated-Field % Back of queue 95

	EB			WB			NB			SB		
	LT	TH	RT	LT	TH	RT	LT	TH	RT	LT	TH	RT
Volume (veh/h)	390	1002	501	220	1091	392	250	821	140	294	532	150
RTOR volume (veh/h)			125			145			110			75
Peak-hour factor	.92	.92	.92	.92	.92	.92	.92	.92	.92	.92	.92	.92
Heavy vehicles (%)	9	9	9	9	9	9	2	2	2	2	2	2
Start-up lost time, l_1 (s)	2	2	2	2	2	2	2	2	2	2	2	2
Extension of effective green, e (s)	2	2	2	2	2	2	2	2	2	2	2	2
Arrival type, AT	3	3	3	3	3	3	3	3	3	3	3	3
Approach pedestrian volume (p/h)	50			50			50			50		
Approach bicycle volume (bic/h)	0			0			0			0		
Left/right parking (Y or N)	N	/	N	N	/	N	N	/	N	N	/	N

Signal Phasing Plan

L: LT T: TH R: RT P: Peds

	Phase 1	Phase 2	Phase 3	Phase 4	Phase 5	Phase 6	Phase 7	Phase 8
EB	L	LTR	TR					
WB	L		TR					
NB				L		TR		
SB				L	LTR	TR		
Green (s)	17	3	30	12	5	23		
Yellow + All red (s)	3	3	3	3	3	3		

Cycle (s) 108 Lost time per cycle (s) 12 Critical v/c Ratio .732

Intersection Performance

	EB			WB			NB			SB		
Lane group configuration	L	T	R	L	T	R	L	T	R	L	T	R
No. of lanes	2	3	1	2	3	1	2	3	1	2	3	1
Flow rate (veh/h)	424	1089	409	239	1186	268	272	892	33	320	578	82
Capacity (veh/h)	685	1583	468	506	1319	386	382	1081	311	636	1456	427
Adjusted saturation flow (veh/h)	3216	4748	1404	3216	4748	1391	3437	5074	1460	3437	5074	1489
v/c ratio	.619	.688	.873	.472	.899	.695	.712	.826	.105	.502	.397	.191
g/C ratio	.213	.333	.333	.157	.278	.278	.111	.213	.213	.185	.287	.287
Average back of queue (veh)	39	51.7	29.4	37	26.1	37.6	18.4	26.1	70.4	44.3	78.2	88.4
Uniform delay (s)	38.5	31.1	33.9	41.4	37.5	34.9	46.3	40.6	34.2	39.5	31	29
Incremental delay (s)	1.7	1.3	19.6	.6	9.7	5.5	6.3	5.7	0	.6	0	0
Initial queue delay (s)	0	0	0	0	0	0	0	0	0	0	0	0
Delay (s)	40.3	32.4	53.4	42	47.3	40.4	52.7	46.2	34.2	40.2	31	29
LOS	D	C	D	D	D	D	D	D	C	D	C	C
Approach delay (s)/LOS	38.6	/	D	45.4	/	D	47.4	/	D	33.8	/	C
Intersection delay (s)/ LOS	41.6			/			D					

©Catalina Engineering, Inc.

TRAFFIX 2000 - Graphical Output

File

Delay(s) and LOS by Lane

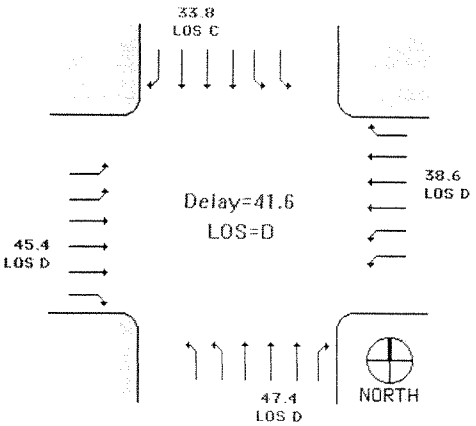

Hourly Movement Volume (veh/h)

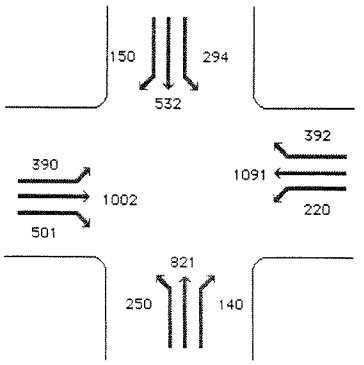

Chapter 16 - Signalized Intersections - Summary of Analysis

Analyst	ANALYST
Agency	OMNI-MEANS
Date	12/11/02
Period	PM PEAK
EW Street	KETTLEMEN LN.
NS Street	LOWER SACRAMENTO RD.

Approach	Delay	LOS
EB approach	38.6 s	D
WB approach	45.4 s	D
NB approach	47.4 s	D
SB approach	33.8 s	C

CHAPTER 16 - OPERATIONAL ANALYSIS - SUMMARY WORKSHEET

General Information

Analyst	PJG		
Agency or Company	OMNI-MEANS		
Analysis Period/Year	AM PEAK	2002	
Comment	C+PRJ		

Site Information

Jurisdiction/Date	CITY OF LODI	12/11/02
EB/WB Street	KETTLEMEN	
NB/SB Street	TIENDA DR.	

Intersection Data

Area type Other Analysis period 1 h Signal type Actuated-Field % Back of queue 95

	EB			WB			NB			SB		
	LT	TH	RT	LT	TH	RT	LT	TH	RT	LT	TH	RT
Volume (veh/h)	15	1697	25	105	1562	30	20	15	70	50	35	30
RTOR volume (veh/h)			0			0			0			15
Peak-hour factor	.92	.92	.92	.92	.92	.92	.92	.92	.92	.92	.92	.92
Heavy vehicles (%)	9	9	9	9	9	9	2	2	2	2	2	2
Start-up lost time, l_1 (s)	2	2	2	2	2	2	2	2	2	2	2	2
Extension of effective green, e (s)	2	2	2	2	2	2	2	2	2	2	2	2
Arrival type, AT	3	3	3	3	3	3	3	3	3	3	3	3
Approach pedestrian volume (p/h)	50			50			50			50		
Approach bicycle volume (bic/h)	0			0			0			0		
Left/right parking (Y or N)	N	/	N	N	/	N	N	/	N	N	/	N

Signal Phasing Plan

L: LT T: TH R: RT P: Peds

	Phase 1	Phase 2	Phase 3	Phase 4	Phase 5	Phase 6	Phase 7	Phase 8
EB	L		TR					
WB	L	LTR	TR					
NB				LTR				
SB					LTR			
Green (s)	12	5	49	12	12			
Yellow + All red (s)	3	3	3	3	3			

Cycle (s) 105 Lost time per cycle (s) 12 Critical v/c Ratio .596

Intersection Performance

	EB			WB			NB			SB		
Lane group configuration	L	TR		L	TR		L	TR		L	LT	R
No. of lanes	1	3		2	3		1	1		1	1	1
Flow rate (veh/h)	16	1872		114	1730		22	92		36	56	16
Capacity (veh/h)	189	2204		613	2561		202	165		202	202	156
Adjusted saturation flow (veh/h)	1656	4722		3216	4718		1770	1445		1770	1766	1368
v/c ratio	.086	.849		.186	.676		.107	.56		.18	.277	.104
g/C ratio	.114	.467		.19	.543		.114	.114		.114	.114	.114
Average back of queue (veh)	43.7	47.1		63.8	82.8		45.7	21.1		42.5	38.1	35.5
Uniform delay (s)	41.6	24.7		35.7	17.3		41.7	44		42.1	42.5	41.7
Incremental delay (s)	0	3.5		0	.7		0	4.3		0	0	0
Initial queue delay (s)	0	0		0	0		0	0		0	0	0
Delay (s)	41.6	28.2		35.7	18		41.7	48.3		42.1	42.5	41.7
LOS	D	C		D	B		D	D		D	D	D
Approach delay (s)/LOS	28.3	/	C	19.1	/	B	47	/	D	42.2	/	D
Intersection delay (s)/ LOS	25			/						C		

©Catalina Engineering, Inc.

HCAP 2000 - Graphical Output

File

Delay(s) and LOS by Lane

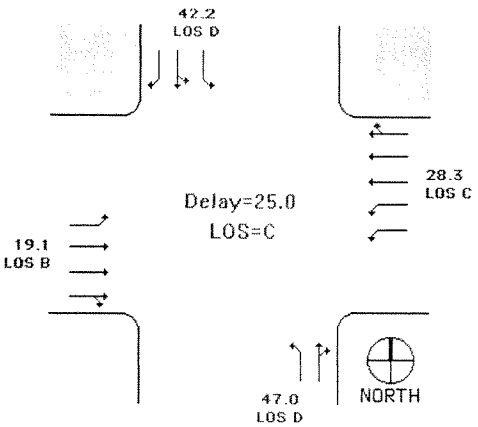

Hourly Movement Volume (veh/h)

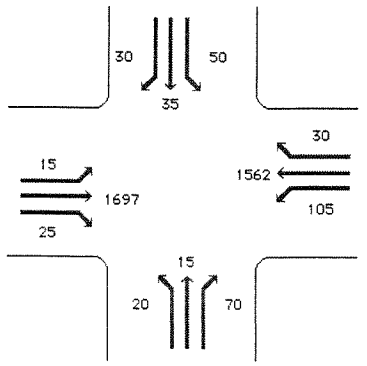

Chapter 16 - Signalized Intersections - Summary of Analysis

Analyst	PJG
Agency	OMNI-MEANS
Date	12/11/02
Period	AM PEAK
EW Street	KETTLEMEN LN.
NS Street	TIENDA DR.

Approach	Delay	LOS
EB approach	28.3 s	C
WB approach	19.1 s	B
NB approach	47.0 s	D
SB approach	42.2 s	D

CHAPTER 16 - OPERATIONAL ANALYSIS - SUMMARY WORKSHEET

General Information

Analyst: ANALYST
Agency or Company: OMNI-MEANS
Analysis Period/Year: PM PEAK 2002
Comment: C+PRJ

Site Information

Jurisdiction/Date: CITY OF LODI 12/11/02
EB/WB Street: KETTLEMEN
NB/SB Street: TIENDA DR.

Intersection Data

Area type: Other Analysis period: 1 h Signal type: Actuated-Field % Back of queue: 95

	EB			WB			NB			SB		
	LT	TH	RT	LT	TH	RT	LT	TH	RT	LT	TH	RT
Volume (veh/h)	120	1156	60	380	1453	140	90	60	270	120	110	60
RTOR volume (veh/h)			0			0			0			30
Peak-hour factor	.92	.92	.92	.92	.92	.92	.92	.92	.92	.92	.92	.92
Heavy vehicles (%)	9	9	9	9	9	9	2	2	2	2	2	2
Start-up lost time, l_1 (s)	2	2	2	2	2	2	2	2	2	2	2	2
Extension of effective green, e (s)	2	2	2	2	2	2	2	2	2	2	2	2
Arrival type, AT	3	3	3	3	3	3	3	3	3	3	3	3
Approach pedestrian volume (p/h)	50			50			50			50		
Approach bicycle volume (bic/h)	0			0			0			0		
Left/right parking (Y or N)	N	/	N	N	/	N	N	/	N	N	/	N

Signal Phasing Plan

L: LT T: TH R: RT P: Peds

	Phase 1	Phase 2	Phase 3	Phase 4	Phase 5	Phase 6	Phase 7	Phase 8
EB	L		TR					
WB	L	LTR	TR					
NB				LTR				
SB					LTR			
Green (s)	12	4	40	32	13			
Yellow + All red (s)	3	3	3	3	3			

Cycle (s): 116 Lost time per cycle (s): 12 Critical v/c Ratio: .861

Intersection Performance

	EB			WB			NB			SB		
Lane group configuration	L	TR		L	TR		L	TR		L	LT	R
No. of lanes	1	3		2	3		1	1		1	1	1
Flow rate (veh/h)	130	1322		413	1732		98	359		87	163	33
Capacity (veh/h)	171	1615		527	1883		488	427		198	204	152
Adjusted saturation flow (veh/h)	1656	4684		3216	4648		1770	1549		1770	1822	1361
v/c ratio	.761	.818		.784	.919		.2	.839		.441	.796	.214
g/C ratio	.103	.345		.164	.405		.276	.276		.112	.112	.112
Average back of queue (veh)	15.2	39.8		21.9	35.9		100.1	30.4		30.6	16.7	31
Uniform delay (s)	50.6	34.7		46.5	32.7		32.2	39.6		48.1	50.2	46.9
Incremental delay (s)	20.1	3.6		8.1	9		0	15.6		.9	22.2	0
Initial queue delay (s)	0	0		0	0		0	0		0	0	0
Delay (s)	70.7	38.2		54.6	41.7		32.2	55.2		49	72.4	46.9
LOS	E	D		D	D		C	E		D	E	D
Approach delay (s)/LOS	41.2	/	D	44.2	/	D	50.3	/	D	62.2	/	E
Intersection delay (s)/ LOS	45			/			D					

©Catalina Engineering, Inc.

HCAP 2000 - Graphical Output

File

Delay(s) and LOS by Lane

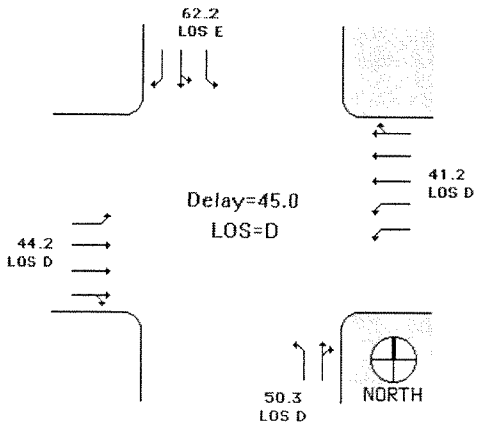

Hourly Movement Volume (veh/h)

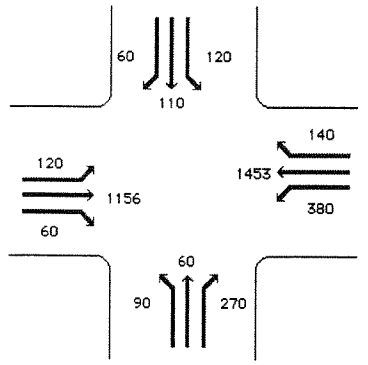

Chapter 16 - Signalized Intersections - Summary of Analysis

Analyst	ANALYST
Agency	OMNI-MEANS
Date	12/11/02
Period	PM PEAK
EW Street	KETTLEMEN LN.
NS Street	TIENDA DR.

Approach	Delay	LOS
EB approach	41.2 s	D
WB approach	44.2 s	D
NB approach	50.3 s	D
SB approach	62.2 s	E

CHAPTER 16 - OPERATIONAL ANALYSIS - SUMMARY WORKSHEET

General Information

Analyst	ANALYST
Agency or Company	OMNI-MEANS
Analysis Period/Year	AM PEAK 2002
Comment	C+PRJ

Site Information

Jurisdiction/Date	CITY OF LODI 12/11/02
EB/WB Street	KETTLEMEN
NB/SB Street	S. MILLS A

Intersection Data

Area type Other Analysis period 1 h Signal type Actuated-Field % Back of queue 95

	EB			WB			NB			SB		
	LT	TH	RT	LT	TH	RT	LT	TH	RT	LT	TH	RT
Volume (veh/h)	27	1588	62	40	1338	45	142	130	45	85	60	42
RTOR volume (veh/h)			0			0			0			20
Peak-hour factor	.92	.92	.92	.92	.92	.92	.92	.92	.92	.92	.92	.92
Heavy vehicles (%)	9	9	9	9	9	9	2	2	2	2	2	2
Start-up lost time, l_1 (s)	2	2	2	2	2	2	2	2	2	2	2	2
Extension of effective green, e (s)	2	2	2	2	2	2	2	2	2	2	2	2
Arrival type, AT	3	3	3	3	3	3	3	3	3	3	3	3
Approach pedestrian volume (p/h)	50			50			50			50		
Approach bicycle volume (bic/h)	0			0			0			0		
Left/right parking (Y or N)	N	/	N	N	/	N	N	/	N	N	/	N

Signal Phasing Plan

L: LT T: TH R: RT P: Peds

	Phase 1	Phase 2	Phase 3	Phase 4	Phase 5	Phase 6	Phase 7	Phase 8
EB	L		TR					
WB	L	LTR	TR					
NB				L	LTR	TR		
SB				L		TR		
Green (s)	12	5	49	12	5	11		
Yellow + All red (s)	3	3	3	3	3	3		

Cycle (s) 112 Lost time per cycle (s) 12 Critical v/c Ratio .638

Intersection Performance

	EB			WB			NB			SB		
Lane group configuration	L	TR		L	TR		L	TR		L	T	R
No. of lanes	1	3		1	3		1	1		1	1	1
Flow rate (veh/h)	29	1793		43	1503		154	190		92	65	24
Capacity (veh/h)	177	2056		296	2395		316	295		190	183	133
Adjusted saturation flow (veh/h)	1656	4699		1656	4705		1770	1737		1770	1863	1355
v/c ratio	.165	.872		.147	.628		.488	.646		.487	.356	.18
g/C ratio	.107	.438		.179	.509		.179	.17		.107	.098	.098
Average back of queue (veh)	37.9	42.7		64.3	86.7		45.1	32.3		27.3	31.5	28
Uniform delay (s)	45.4	28.7		38.8	19.8		41.4	43.4		47.1	47.2	46.4
Incremental delay (s)	0	4.7		0	.5		1.1	4.9		1.8	0	0
Initial queue delay (s)	0	0		0	0		0	0		0	0	0
Delay (s)	45.4	33.4		38.8	20.4		42.5	48.3		48.9	47.2	46.4
LOS	D	C		D	C		D	D		D	D	D
Approach delay (s)/LOS	33.5	/	C	20.9	/	C	45.7	/	D	48	/	D
Intersection delay (s)/ LOS	30.3					/				C		

©Catalina Engineering, Inc.

HCAP 2000 - Graphical Output

File

Delay(s) and LOS by Lane

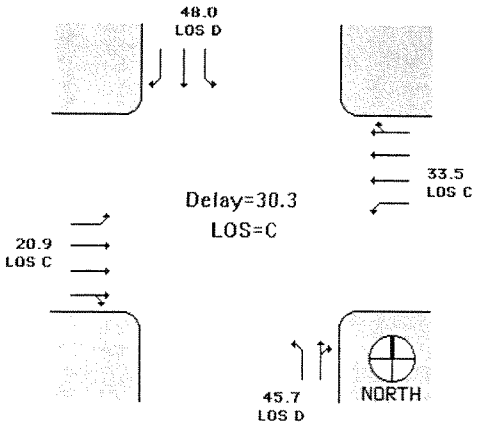

Hourly Movement Volume (veh/h)

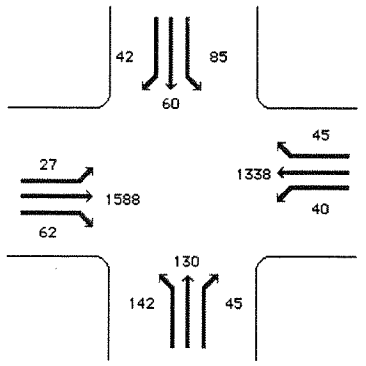

Chapter 16 - Signalized Intersections - Summary of Analysis

Analyst	ANALYST
Agency	OMNI-MEANS
Date	12/11/02
Period	AM PEAK
EW Street	KETTLEMEN LN.
NS Street	S. MILLS AVE.

Approach	Delay	LOS
EB approach	33.5 s	C
WB approach	20.9 s	C
NB approach	45.7 s	D
SB approach	48.0 s	D

CHAPTER 16 - OPERATIONAL ANALYSIS - SUMMARY WORKSHEET

General Information

Analyst	ANALYST
Agency or Company	OMNI-MEANS
Analysis Period/Year	PM PEAK 2002
Comment	C+PRJ

Site Information

Jurisdiction/Date	CITY OF LODI 12/11/02
EB/WB Street	KETTLEMEN
NB/SB Street	S. MILLS A

Intersection Data

Area type Other Analysis period 1 h Signal type Actuated-Field % Back of queue 95

	EB			WB			NB			SB		
	LT	TH	RT	LT	TH	RT	LT	TH	RT	LT	TH	RT
Volume (veh/h)	101	1284	71	70	1822	80	80	90	50	80	80	71
RTOR volume (veh/h)			0			0			0			44
Peak-hour factor	.92	.92	.92	.92	.92	.92	.92	.92	.92	.92	.92	.92
Heavy vehicles (%)	9	9	9	9	9	9	2	2	2	2	2	2
Start-up lost time, l_1 (s)	2	2	2	2	2	2	2	2	2	2	2	2
Extension of effective green, e (s)	2	2	2	2	2	2	2	2	2	2	2	2
Arrival type, AT	3	3	3	3	3	3	3	3	3	3	3	3
Approach pedestrian volume (p/h)	50			50			50			50		
Approach bicycle volume (bic/h)	0			0			0			0		
Left/right parking (Y or N)	N	/	N	N	/	N	N	/	N	N	/	N

Signal Phasing Plan

L: LT T: TH R: RT P: Peds

	Phase 1	Phase 2	Phase 3	Phase 4	Phase 5	Phase 6	Phase 7	Phase 8
EB	L		TR					
WB	L	LTR	TR					
NB				L	LTR	TR		
SB				L		TR		
Green (s)	8	4	53	10	4	10		
Yellow + All red (s)	3	3	3	3	3	3		

Cycle (s) 107 Lost time per cycle (s) 12 Critical v/c Ratio .727

Intersection Performance

	EB			WB			NB			SB		
Lane group configuration	L	TR		L	TR		L	TR		L	T	R
No. of lanes	1	3		1	3		1	1		1	1	1
Flow rate (veh/h)	110	1473		76	2067		87	152		87	87	29
Capacity (veh/h)	124	2321		232	2634		281	269		165	174	128
Adjusted saturation flow (veh/h)	1656	4686		1656	4697		1770	1690		1770	1863	1364
v/c ratio	.887	.634		.328	.785		.309	.567		.526	.499	.23
g/C ratio	.075	.495		.14	.561		.159	.159		.093	.093	.093
Average back of queue (veh)	8.2	82.6		41.2	65.8		51	33.7		22.4	24.5	25.4
Uniform delay (s)	49.1	19.9		41.5	18.4		39.8	41.6		46.2	46.1	44.9
Incremental delay (s)	69.8	.6		0	1.6		0	2.8		3.1	2.3	0
Initial queue delay (s)	0	0		0	0		0	0		0	0	0
Delay (s)	118.8	20.4		41.5	20.1		39.8	44.4		49.4	48.4	44.9
LOS	F	C		D	C		D	D		D	D	D
Approach delay (s)/LOS	27.3	/	C	20.8	/	C	42.7	/	D	48.3	/	D
Intersection delay (s)/ LOS	25.9					/				C		

©Catalina Engineering, Inc.

HICAP 2000 - Graphical Output

File

Delay(s) and LOS by Lane

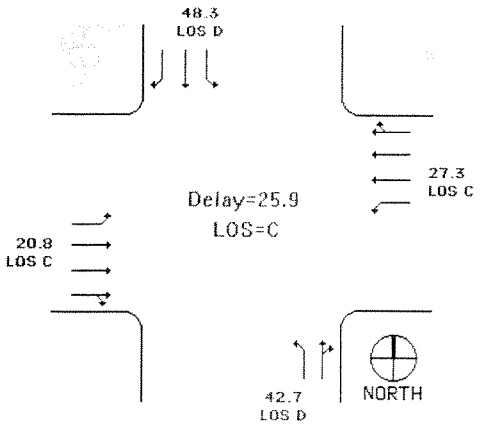

Hourly Movement Volume (veh/h)

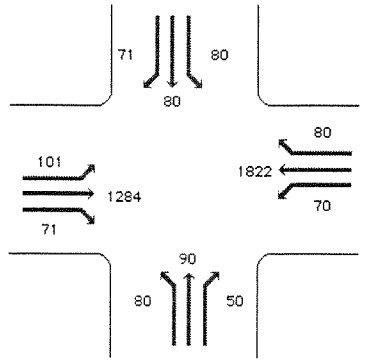

Chapter 16 - Signalized Intersections - Summary of Analysis

Analyst	ANALYST
Agency	OMNI-MEANS
Date	12/11/02
Period	PM PEAK
EW Street	KETTLEMEN LN.
NS Street	S. MILLS AVE.

Approach	Delay	LOS
EB approach	27.3 s	C
WB approach	20.8 s	C
NB approach	42.7 s	D
SB approach	48.3 s	D

CHAPTER 16 - OPERATIONAL ANALYSIS - SUMMARY WORKSHEET

General Information

Analyst	PJG
Agency or Company	OMNI-MEANS
Analysis Period/Year	AM PEAK 2002
Comment	C+PRJ

Site Information

Jurisdiction/Date	CITY OF LODI 12/11/02
EB/WB Street	KETTLEMEN
NB/SB Street	ROAD A

Intersection Data

Area type Other Analysis period 1 h Signal type Actuated-Field % Back of queue 95

	EB			WB			NB			SB		
	LT	TH	RT	LT	TH	RT	LT	TH	RT	LT	TH	RT
Volume (veh/h)	126	866	24	65	942	148	40	30	134	120	15	45
RTOR volume (veh/h)			20			35			30			0
Peak-hour factor	.92	.92	.92	.92	.92	.92	.92	.92	.92	.92	.92	.92
Heavy vehicles (%)	2	2	2	2	2	2	2	2	2	2	2	2
Start-up lost time, l_1 (s)	2	2	2	2	2	2	2	2	2	2	2	2
Extension of effective green, e (s)	2	2	2	2	2	2	2	2	2	2	2	2
Arrival type, AT	3	3	3	3	3	3	3	3	3	3	3	3
Approach pedestrian volume (p/h)	50			50			50			50		
Approach bicycle volume (bic/h)	0			0			0			0		
Left/right parking (Y or N)	N	/	N	N	/	N	N	/	N	N	/	N

Signal Phasing Plan

L: LT T: TH R: RT P: Peds

	Phase 1	Phase 2	Phase 3	Phase 4	Phase 5	Phase 6	Phase 7	Phase 8
EB	L		TR					
WB	L	LTR	TR					
NB				L		TR		
SB				L	LTR	TR		
Green (s)	10	4	36	10	4	16		
Yellow + All red (s)	3	3	3	3	3	3		

Cycle (s) 98 Lost time per cycle (s) 12 Critical v/c Ratio .493

Intersection Performance

	EB			WB			NB			SB		
Lane group configuration	L	TR		L	TR		L	T	R	L	TR	
No. of lanes	1	3		2	3		1	1	1	1	1	
Flow rate (veh/h)	137	941		71	1024		43	33	113	130	65	
Capacity (veh/h)	181	1859		596	2221		181	304	233	307	367	
Adjusted saturation flow (veh/h)	1770	5061		3437	5061		1770	1863	1427	1770	1562	
v/c ratio	.758	.506		.119	.461		.241	.107	.485	.425	.178	
g/C ratio	.102	.367		.173	.439		.102	.163	.163	.173	.235	
Average back of queue (veh)	15.3	83.7		66.5	106.8		35.4	68.7	33.1	47.6	76.8	
Uniform delay (s)	42.8	24.1		34.2	19.3		40.5	34.9	37.3	36.1	29.9	
Incremental delay (s)	18.7	.2		0	.1		0	0	1.4	.4	0	
Initial queue delay (s)	0	0		0	0		0	0	0	0	0	
Delay (s)	61.5	24.3		34.2	19.5		40.5	34.9	38.7	36.6	29.9	
LOS	E	C		C	B		D	C	D	D	C	
Approach delay (s)/LOS	29	/	C	20.4	/	C	38.5	/	D	34.4	/	C
Intersection delay (s)/ LOS	26.5					/				C		

©Catalina Engineering, Inc.

HiCAP 2000 - Graphical Output

File

Delay(s) and LOS by Lane

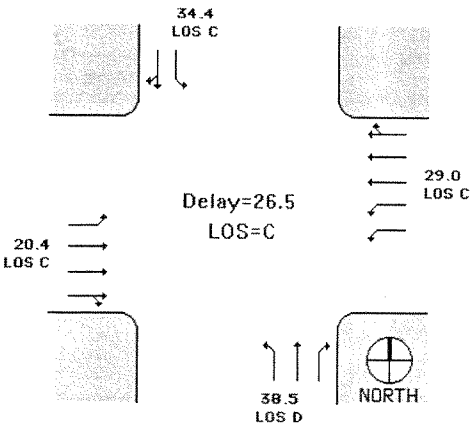

Hourly Movement Volume (veh/h)

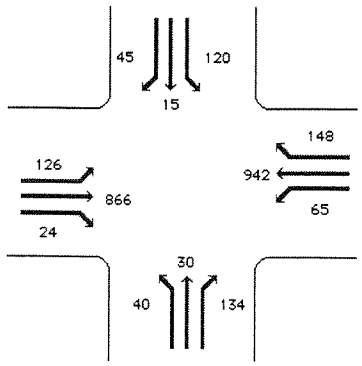

Chapter 16 - Signalized Intersections - Summary of Analysis

Analyst	PJG
Agency	OMNI-MEANS
Date	12/11/02
Period	AM PEAK
EW Street	KETTLEMEN LN.
NS Street	ROAD A

Approach	Delay	LOS
EB approach	29.0 s	C
WB approach	20.4 s	C
NB approach	38.5 s	D
SB approach	34.4 s	C

CHAPTER 16 - OPERATIONAL ANALYSIS - SUMMARY WORKSHEET

General Information

Analyst	PJG
Agency or Company	OMNI-MEANS
Analysis Period/Year	PM PEAK 2002
Comment	C+PRJ

Site Information

Jurisdiction/Date	CITY OF LODI 12/11/02
EB/WB Street	KETTLEMEN
NB/SB Street	ROAD A

Intersection Data

Area type Other Analysis period 1 h Signal type Actuated-Field % Back of queue 95

	EB			WB			NB			SB		
	LT	TH	RT	LT	TH	RT	LT	TH	RT	LT	TH	RT
Volume (veh/h)	203	1576	50	160	1122	208	32	25	110	178	40	77
RTOR volume (veh/h)			0			0						0
Peak-hour factor	.92	.92	.92	.92	.92	.92	.92	.92	.92	.92	.92	.92
Heavy vehicles (%)	2	2	2	2	2	2	2	2	2	2	2	2
Start-up lost time, l_1 (s)	2	2	2	2	2	2	2	2	2	2	2	2
Extension of effective green, e (s)	2	2	2	2	2	2	2	2	2	2	2	2
Arrival type, AT	3	3	3	3	3	3	3	3	3	3	3	3
Approach pedestrian volume (p/h)	50			50						50		
Approach bicycle volume (bic/h)	0			0						0		
Left/right parking (Y or N)	N	/	N	N	/	N		/		N	/	N

Signal Phasing Plan

L: LT T: TH R: RT P: Peds

	Phase 1	Phase 2	Phase 3	Phase 4	Phase 5	Phase 6	Phase 7	Phase 8
EB	L		TR					
WB	L	LTR	TR					
NB				L		TR		
SB				L	LTR	TR		
Green (s)	15	4	58	8	4	9		
Yellow + All red (s)	3	3	3	3	3	3		

Cycle (s) 116 Lost time per cycle (s) 12 Critical v/c Ratio .64

Intersection Performance

	EB			WB			NB			SB		
Lane group configuration	L	TR		L	TR		L	T	R	L	TR	
No. of lanes	1	3		2	3		1	1	1	1	1	
Flow rate (veh/h)	221	1713		174	1220		35	27	120	193	43	
Capacity (veh/h)	229	2530		652	2836		122	145	123	229	255	
Adjusted saturation flow (veh/h)	1770	5061		3437	5061		1770	1863	1583	1770	1848	
v/c ratio	.964	.677		.267	.43		.285	.188	.973	.846	.171	
g/C ratio	.129	.5		.19	.56		.069	.078	.078	.129	.138	
Average back of queue (veh)	13.5	83.5		62.3	142.9		23	30.2	7.6	16.6	54.2	
Uniform delay (s)	50.2	21.9		40.1	14.8		51.3	50.1	53.4	49.4	44.1	
Incremental delay (s)	85.9	.7		0	.1					29.5	0	
Initial queue delay (s)	0	0		0	0		0	0	0	0	0	
Delay (s)	136.1	22.7		40.1	14.8		51.3	50.1	53.4	78.9	44.1	
LOS	F	C		D	B		D	D	D	E	D	
Approach delay (s)/LOS	35.6	/	D	18	/	B	52.5	/	D	72.5	/	E
Intersection delay (s)/ LOS	32.2				/					C		

©Catalina Engineering, Inc.

HCAP 2000 - Graphical Output

File

Delay(s) and LOS by Lane

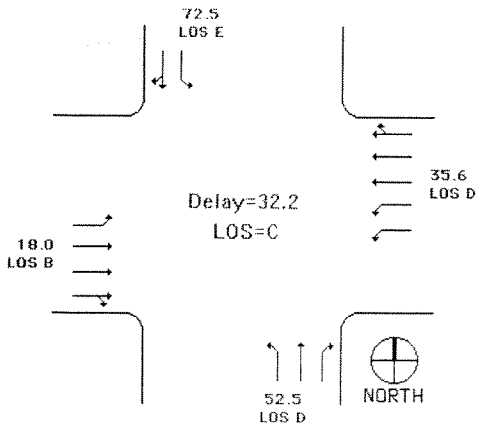

Hourly Movement Volume (veh/h)

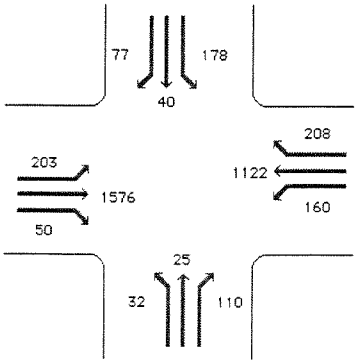

Chapter 16 - Signalized Intersections - Summary of Analysis

Analyst	PJG
Agency	OMNI-MEANS
Date	12/11/02
Period	PM PEAK
EW Street	KETTLEMEN LN.
NS Street	ROAD A

Approach	Delay	LOS
EB approach	35.6 s	D
WB approach	18.0 s	B
NB approach	52.5 s	D
SB approach	72.5 s	E

Pass-By Trip Rates

Figure 5.5 Shopping Center (820)

Average Pass-By Trip Percentage vs:	**1,000 Sq. Feet Gross Leasable Area**
On a:	**Weekday, P.M. Peak Period**
Number of Studies:	100
Average 1,000 Sq. Feet GLA:	329

Data Plot

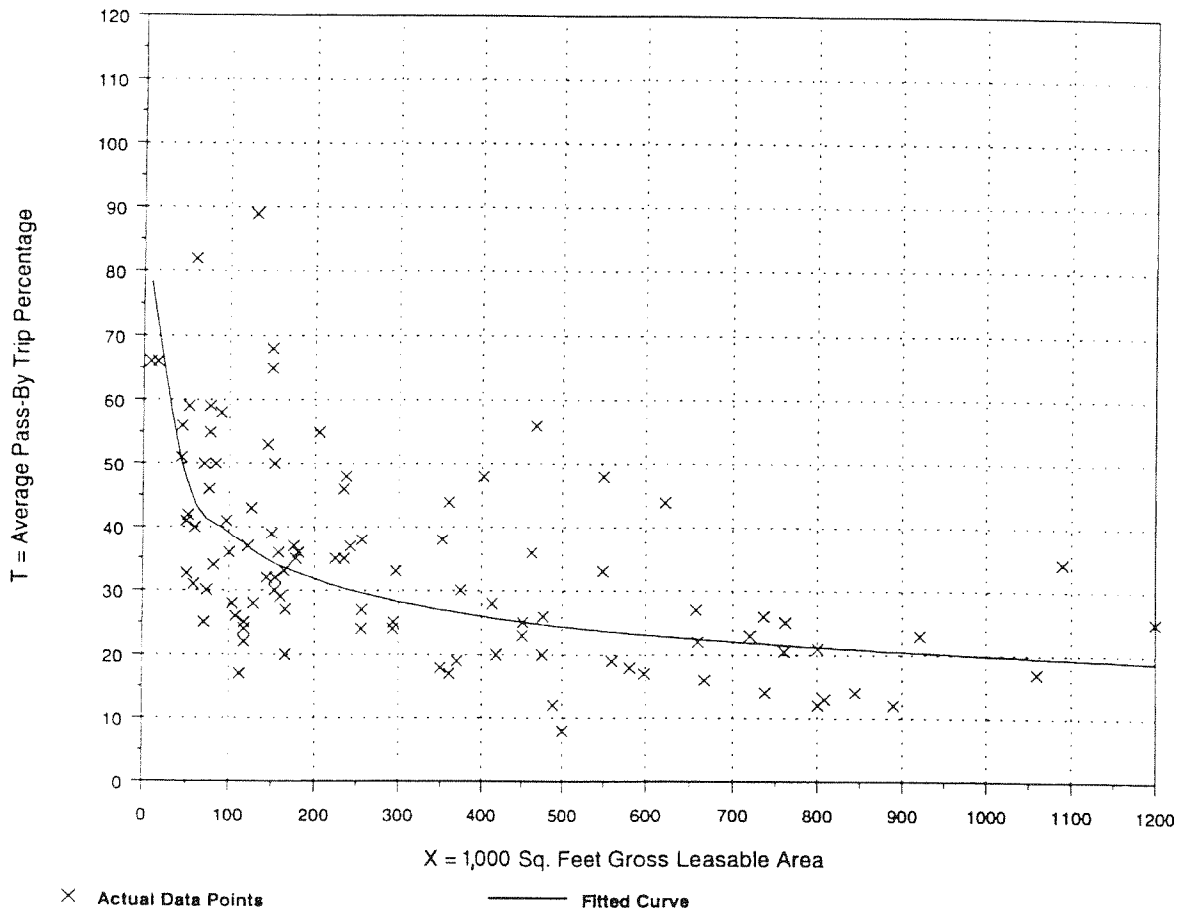

Fitted Curve Equation: Ln(T) = -0.291 Ln(X) + 5.001 $R^2 = 0.37$

Table 5.4 (Cont'd)
Pass-By Trips and Diverted Linked Trips
Weekday, P.M. Peak Period

Land Use 820—Shopping Center

SIZE (1,000 SQ. FEET GLA)	LOCATION	WEEKDAY SURVEY DATE	NO. OF INTERVIEWS	TIME PERIOD	PRIMARY TRIP (%)	NON-PASS-BY TRIP (%)	DIVERTED LINKED TRIP (%)	PASS-BY TRIP (%)	ADJ. STREET PEAK HOUR VOLUME	AVERAGE DAILY TRAFFIC	SOURCE
237	W Windsor Twp, NJ	Winter 1988/89	n/a	4-6 P.M.	-	52	-	48	n/a	46,000	Booz Allen & Hamilton
242	Willow Grove, PA	Winter 1988/89	n/a	4-6 P.M.	-	63	-	37	n/a	26,000	McMahon Associates
297	Whitehall, PA	Winter 1988/89	n/a	4-6 P.M.	-	67	-	33	n/a	26,000	Orth Rodgers
360	Broward County, FL	Winter 1988/89	n/a	4-6 P.M.	-	56	-	44	n/a	73,000	McMahon Associates
370	Pittsburgh, PA	Winter 1988/89	n/a	4-6 P.M.	-	81	-	19	n/a	33,000	Wilbur Smith
150	Portland, OR	n/a	519	4-6 P.M.	6	-	26	68	n/a	25,000	Kittleson and Associates
150	Portland, OR	n/a	655	4-6 P.M.	7	-	28	65	n/a	30,000	Kittleson and Associates
760	Calgary, Alberta	Oct-Dec 1987	15,436	4-6 P.M.	39	-	41	20	n/a	n/a	City of Calgary DOT
178	Bordentown, NJ	Apr. 1989	154	2-6 P.M.	-	65	-	35	n/a	37,980	Raymond Keyes Assoc.
144	Manalapan, NJ	Jul. 1990	176	3:30-6:15 P.M.	44	-	24	32	n/a	69,347	Raymond Keyes Assoc.
549	Natick, MA	Feb. 1989	n/a	4:45-5:45 P.M.	26	-	41	33	n/a	48,782	Raymond Keyes Assoc.

Average Pass-By Trip Percentage: 34

26%
a.u.

Table 5.8
Pass-By Trips and Diverted Linked Trips
Weekday, A.M. Peak Period

Land Use 834—Fast Food Restaurant with Drive-Through Window

SEATS	SIZE (1,000 SQ. FEET GFA)	LOCATION	WEEKDAY SURVEY DATE	NO. OF INTERVIEWS	TIME PERIOD	PRIMARY TRIP (%)	NON-PASS-BY TRIP (%)	DIVERTED LINKED TRIP (%)	PASS-BY TRIP (%)	ADJ. STREET PEAK HOUR VOLUME	SOURCE
n/a	<5	Chicago suburbs, IL	1987	84	7-9 A.M.	-	56	-	44	n/a	Kenig, O'Hara, Humes, Flock
88	1.4	Louisville area, KY	1993	n/a	7-9 A.M.	22	-	16	62	1,407	Barton-Aschman Assoc.
100	3.6	Louisville, KY	1993	n/a	7-9 A.M.	47	-	21	32	437	Barton-Aschman Assoc.
87	4.2	New Albany, IN	1993	n/a	7-9 A.M.	23	-	31	46	1,049	Barton-Aschman Assoc.
150	3.0	Louisville area, KY	1993	n/a	7-9 A.M.	14	-	43	43	2,903	Barton-Aschman Assoc.
n/a	3.3	varies	1996	n/a	6-9 A.M.	-	32	-	68	n/a	Oracle Engineering

Average Pass-By Trip Percentage: 49

LUCS 27% 24% 49%

Table 5.9
Pass-By Trips and Diverted Linked Trips
Weekday, P.M. Peak Period

Land Use 834—Fast Food Restaurant with Drive-Through Window

SEATS	SIZE (1,000 SQ. FEET GFA)	LOCATION	WEEKDAY SURVEY DATE	NO. OF INTERVIEWS	TIME PERIOD	PRIMARY TRIP (%)	NON-PASS-BY TRIP (%)	DIVERTED LINKED TRIP (%)	PASS-BY TRIP (%)	ADJ. STREET PEAK HOUR VOLUME	SOURCE
n/a	~2.6	Minn-St. Paul, MN	1987	50	3-7 P.M.	27	-	48	25	n/a	n/a
n/a	<5.0	Chicago suburbs, IL	1987	80	3-6 P.M.	-	62	-	38	n/a	Kenig, O'Hara, Humes, Flock
n/a	<5.0	Chicago suburbs, IL	1987	100	3-6 P.M.	-	45	-	55	n/a	Kenig, O'Hara, Humes, Flock
n/a	<5.0	Chicago suburbs, IL	1987	159	3-6 P.M.	-	44	-	56	n/a	Kenig, O'Hara, Humes, Flock
n/a	<5.0	Chicago suburbs, IL	1987	225	3-6 P.M.	-	52	-	48	n/a	Kenig, O'Hara, Humes, Flock
n/a	<5.0	Chicago suburbs, IL	1987	88	3-6 P.M.	-	65	-	35	n/a	Kenig, O'Hara, Humes, Flock
n/a	<5.0	Chicago suburbs, IL	1987	84	3-6 P.M.	-	56	-	44	n/a	Kenig, O'Hara, Humes, Flock
88	1.3	Louisville area, KY	1993	n/a	4-6 P.M.	22	-	10	68	2,055	Barton-Aschman Assoc.
120	1.9	Louisville area, KY	1993	33	4-6 P.M.	24	-	9	67	2,447	Barton-Aschman Assoc.
87	4.2	New Albany, IN	1993	n/a	4-6 P.M.	25	-	19	56	1,632	Barton-Aschman Assoc.
150	3.0	Louisville area, KY	1993	n/a	4-6 P.M.	31	-	38	31	4,250	Barton-Aschman Assoc.
n/a	3.1	Kissimmee, FL	1995	28	2-6 P.M.	-	29	n/a	71	n/a	TPD, Inc.
n/a	3.1	Apopka, FL	1996	29	2-6 P.M.	-	62	n/a	38	n/a	TPD, Inc.
n/a	2.8	Winter Springs, FL	1995	47	2-6 P.M.	-	34	-	66	n/a	TPD, Inc.
n/a	4.3	Longwood, FL	1994	304	2-6 P.M.	-	38	-	62	n/a	TPD, Inc.
n/a	3.2	Altamonte Springs, FL	1996	202	2-6 P.M.	39	-	21	40	n/a	TPD, Inc.
n/a	2.9	Winter Park, FL	1996	271	2-6 P.M.	41	-	18	41	n/a	TPD, Inc.
n/a	3.3*	several	1996	varies	4-6 P.M.	-	38	-	62	n/a	Oracle Engineering

* Average of several combined studies.
Average Pass-By Trip Percentage: 50

average 30% 20% 7%

Table 5.20
Pass-By Trips and Diverted Linked Trips
Weekday, P.M. Peak Period

Land Use 854—Discount Supermarket

SIZE (1,000 SQ. FEET GFA)	LOCATION	WEEKDAY SURVEY DATE	NO. OF INTERVIEWS	TIME PERIOD	PRIMARY TRIP (%)	NON-PASS-BY TRIP (%)	DIVERTED LINKED TRIP (%)	PASS-BY TRIP (%)	ADJ. STREET PEAK HOUR VOLUME	SOURCE
50	Overland Park, KS	7/6/88	33	4:30-5:30 P.M.	70	-	21	9	n/a	n/a

Table 5.21
Pass-By Trips and Diverted Linked Trips
Weekday, P.M. Peak Period

Land Use 862—Home Improvement Superstore

SIZE (1,000 SQ. FEET GFA)	LOCATION	WEEKDAY SURVEY DATE	NO. OF INTERVIEWS	TIME PERIOD	PRIMARY TRIP (%)	NON-PASS-BY TRIP (%)	DIVERTED LINKED TRIP (%)	PASS-BY TRIP (%)	ADJ. STREET PEAK HOUR VOLUME	SOURCE
107	Casselberry, FL	1992	488	2-6 P.M.	32	-	24	44	n/a	TPD, Inc.
91	Daytona Beach, FL	1993	111	2-6 P.M.	-	54	-	46	n/a	TPD, Inc.
100	Orlando, FL	1993	147	2-6 P.M.	-	46	-	54	n/a	TPD, Inc.

Average Pass-By Trip Percentage: 48

Approved Project Trip Generation

Table 1A
Daily and Peak Hour Approved Project Trip Generation
City of Lodi[(1),(2)]

A.	Mills Avenue Medical Office Building:		
	Daily:	46,000 s.f. x 36.13 trips/1,000	= 1,662
	AM:	46,000 s.f. x 2.43 trips/1,000	= 112 (90, 22)
	PM:	46,000 s.f. x 3.66 trips/1,000	= 168 (45, 123)
B.	Tienda Place Residential Subdivision:		
	Daily:	159 units x 9.57 trips/unit	= 1,523
	AM:	159 units x 0.75 trips/unit	= 120 (30, 90)
	PM:	159 units x 1.01 trips/unit	= 161 (103, 58)
C.	G-REM Residential Subdivision:		
	Daily:	33 units x 9.57 trips/unit	= 316
	AM:	33 units x 0.75 trips/unit	= 25 (6, 19)
	PM:	33 units x 1.01 trips/unit	= 34 (22, 12)
D.	Luckey @ Harney Lane Residential Subdivision:		
	Daily:	77 units x 9.57 trips/unit	= 737
	AM:	77 units x 0.75 trips/unit	= 56 (14, 42)
	PM:	77 units x 1.01 trips/unit	= 78 (50, 28)
E.	Century Meadows Subdivision:		
	Daily:	92 units x 9.57 trips/unit	= 880
	AM:	92 units x 0.75 trips/unit	= 69 (17, 52)
	PM:	92 units x 1.01 trips/unit	= 93 (60, 33)
F.	Marshall's Retail Store:		
	Daily:	28,978 s.f. x 31.9 trips/1,000	= 924
	AM:	28,978 s.f. x 0.65 trips/1,000	= 19 (11, 8)
	PM:	28,978 s.f. x 3.07 trips/1,000	= 89 (43, 46)
G.	Quizno's Restaurant:		
	Daily:	1,389 s.f. x 130.34 trips/1,000	= 181
	AM:	1,389 s.f. x 9.27 trips/1,000	= 13 (7, 6)
	PM:	1,389 s.f. x 10.86 trips/1,000	= 15 (7, 8)
H.	Tienda Public School:		
	Daily:	85 students x 1.79 trips/student	= 152
	AM:	85 students x 0.46 trips/student	= 39 (27, 12)
	PM:	85 students x 0.15 trips/student	= 13 (5, 8)

(1) Institute of Transportation Engineers (ITE), Trip Generation, 6th Edition, Medical Office Building, Single-Family Detached Units, Shopping Center, High Turn-Over Restaurant, and High School land uses, 1997.

(2) J.D. Hightower, Planning Director, City of Lodi, Approved project list, October 16, 2002.