Lodi Electric Utility

Streetlight Specifications

Material and Installation

Revision Notice Log

Rev No.	Date	By	Description
1	8/7/02	KF	Leveling Plate for 12' Decorative Streetlight
2	2/19/04	KF	Material and Installation 501 0100
3	5/18/04	KF	Streetlight Legend, Added Grounding Conductor & Fuse
4	6/7/05	KF	Streetlight General 502 0110, Added Gray Wire Color
			Streetlight Wiring 503 0101, Added Wire Color Chart, Sheet. 2 of 6, Added Fuse Size Formula, Sh. 6 of 6
			12' or 14' Decorative Streetlight 505 0201, Leveling Plate and Hand Hole, Sheet 1 of 5; Added Conduit Circle Note and Type, Sheet 2 of 5
			12' or 14' Decorative Streetlight 505 0201, Leveling Plate Note, Sheet 3 of 5
			10' Concrete Streetlight 507 0201, Add Access Panel Note, Sheet 1 of 3; Added Conduit Circle Note and Type, Sheet 2 of 3
5	7/25/05	KF	30' Steel Streetlight 504 0201, Added Conduit Circle Note and Type, Sheet 2 of 8
6	2/18/11	--	Unknown, presumably by KF
7	8/27/15	TC	Discovered unposted version, added "version superceedes." Added logo on cover & "Lodi Elec." to clarify *whose* spec. Web address; added revision log; Added "known issues" section; "Ballast" to "Driver"; formatting changes; Removed HPS; removed mogul-base; Changed ballast specific "HPF" term to "0.9 PF". Added surge protection; changed wattage to eqiv-lumens-at-HPS-wattage. Allowing for polymer concrete boxes in sidewalk. Existing specified Christy N09 box now Old Castle, existing boxes are not vehicle rated. Added "Any" tree trimming (vs. unintended trimming mandate). "Follow mfgr rec." for powder coating preparation/application. Sec-5 listed PW as sole inspector, pigeon-holed P/W to compaction testing and provided LEU tel# for remaining. Specified longer lasting photoeye, Ripley LongLife-II (long warranty, zero-crossing, conformal coating etc), 12-year warranty to photoeye life. Added on-off ratio to prevent cycling. Added solid-state to controller. Removed, "Fisher Pierce model 7573B-EDBC, Dark to Light model D124 -1.0 STM or Sunrise Tech model S124 -1.0 STM" Changed "Volts Amp level" to "lumens level". Made "Concrete Std" be "Part-C". Changed GE M2RR to Evolve LED Roadway. Added HPS cross-reference table. Removed IES Type-III for GE Evolve, replaced with, "Narrow Asymetric". Removed, "Removeable and highly specular reflector", removed, "Gasketed; to seal the optical assembly at lamp socket entry and between the refractor and the reflector." Removed, "Acrylic or glass refractor for 100 watt (and smaller) luminaires and glass refractor for 250 watt luminaires."; adding twistlock long-life photocell "H/PCLL" for post-tops; removed concrete HPS luminaire "PR 070 HP MT CGN P1 A" inserted GG's LED Holophane Prismasphere PN – found mistake in GG's post-top PN (GG confirmed) -> augmented with "GVBANDA". Found & added "100 & 150W" HPS-equivalent prismasphere options. Added "Window Gray" labels to RAL color. Added second color option to Holophane post-tops: Custom-Match-Color 049/62070. Confirmed rail bronze color PN's from GG/Holophane & SJ/NCS; Removed, "Glass refractor" from description. Replaced IES type-III with asym. lunar opt. Removed redundant IES type-III inclusion. Formatting; Added bolt-down requirement to J-boxes (anti-theft). Reorganized/clarified fusing parts layout. Specified that decorative standards shall not have fusing in base, but shall have

			dedicated fuses in nearest upstream box (T-men report that decr-standard cover plates are unworkable). With B.E., Added LED values and cleaned up fuse-sizing dwg 503-0101(6). Per Tanko advice that GE LED's lack inductive driver and their higher in-rush can blow quick-blow fuses → revised fuse drawing to note "slow-blow" requirement. Added Holophane Lumens to charts. Tanko, confirmed newest GE P/N's; added GE's lumens; updated TOC. Added RT's pictures. Added Rail Bronze pic & LED cobra pic. D. Ferguson reports ELA post-top style poles do not mate with Holophane mounting bolts, problem with trying to replace damaged fixtures on alternate vendor's base. Removing Window Gray ELA 12' P/N: P3013M-12LODI, RAL7040; removing 14' Gray P/N: P3013M-14LODI, RAL7040; removing Rail Bronze 12' P/N: P3013M-12LODI, Custom Color - TD 049/62070; removing Rail Bronze 14' P/N: P3013M-14LODI, Custom Color - TD 049/62070; Approved: HASAN SHAHRIAR Sr. Power Engineer Date: 09/14/2015
8	12/8/15	TC	Changed LED cobrahead P/N's to IES Type-III per Tanko. Finial added back in to post-tops. Added "SFBC" (full-base cover) to Valmont poles Approved: HASAN SHAHRIAR Sr. Power Engineer Date: 12/09/2015
9	8/15/17	TC	Added Type-4 cobrahead; added "Approx." to GE IES-Type; Updated cobra-head P/N's to reflect GE's 2nd numbering change. Updated acorn-style P/N's to reflect Holophane's numbering change, and revised watts & lumens. Updated Sec. II-B to reflect 8" bolt-cir., not 7" (per EF & WH). Approved: HASAN SHAHRIAR Sr. Power Engineer Date: 10/25/2017

Known Issues / Pending Future Changes

Section	Description
1.Material.Protection	"Shall have protection at source" unclear how this comports with 3-or less base-fuse only language/dwg.
1.Materials.J-Box	Dimensions for bolt are unspecified (utility can provide the bolts but bolt-holes must accomodate).
1.Materials.J-Box	Box dimensions & material subject to upcoming change
1.Material.Conduits	¾ NPT threads appears to require ¾" conduit. Considder upsizing conduit, particularly to enable larger theft-resistant AL wire.
1.Material.Conduit	Radius "shall be the mfgr standard radius" open to arguement
2.A.Steel	Should specify shiny cobraheads and not allow for dull metal
2.B.Aluminum	"Premium" powder coating is vague
2.B.Aluminum	TGIC is subject to class-2 mutagent restrictions in parts of Europe. If permitting it, should probably spec. Tiger Drylac Series 38 "Super Durable" (RAL 7040 = Tiger 38/70046). If excluding it, possibly spec Tiger Drylac Series 59 TGIC-Free (TGIC-free also results in more uniform coatings).
2.B.Aluminum	Consider striking leveling-plate requirement & relying upon double-nut. Majority of poles in town have been installed w/o LP.
2.B.Concrete	"The concrete standard is a City of Lodi specific design. It is generally supplied by the City" Why not included herein?
2.B.Various	Rosegate SL color "Rail Bronze" is not a RAL#, appears to be proprietary Tiger Drylac (requires they stay in business) – should find approx. RAL equivalent; would improve speed and pricing.
2.D (NEW)	Create section for downtown-style lights.
3.Installation.Riser	Metal portions of risers poses many challenges; remains here for sole purpose of fighting CU theft. Drawings (502-0120) call for steel for entire route. This will create problems long after install.
5.Other.Trees	Unclear <u>who</u> shall be trimming trees.
Drawings	Update 502-0101 to include LED Lumens
Various	Add luminaire retrofit kit part no. "GVDRETRO ___ ___ ___" ?
Various	Consider switching to Al wire, including for grounds (Cu theft)
Various	Consider conduits larger than 1" (for Al wire and other reasons)
Various	Tamper-resistant cover specs are currently not released publicly to to minimize circumvention.
Various	Typical design-spacings for lights is omitted.
Various	Fix dwgs to show decorative standards shall not have fusing in base, but shall have dedicated fuses in nearest upstream box (T-men report that decrorative-standard cover plates are unworkable).

Table of Contents

Description	Page Number
Revision Log	i
Known Issues / Pending Future Changes	iii
Introduction	1
Part I	
Material, General for all Types of Streetlights	1
Driver	1
Surge Protection	1
Lamp	1
Photoelectric Control	1
Controller – Multiple Lights	1
Protection (fusing)	2
Conduits	2
Junction Box	3
Conductors	3
Conductor Connectors	3
Grounding	3
Anchor Bolts	4
Concrete	4
Grouting Mortar	4
Part II	
Material, Specific for Various Types of Streetlights	
A. Steel Standard with Arm and Luminaire, 30 ft. Mounting Height	
Steel Standard	5
Luminaire	6
B. Aluminum Standard with Post Top Luminaire, 12 ft. or 14 ft. Mounting Height (Decorative Standard)	
Aluminum Standard	7
Luminaire	8
C. Concrete Standard with Post Top Luminaire, 10 ft. Mounting Height	
Concrete Standard	10
Luminaire	10

Table of Contents (continued)

Part III

Installation Requirements
General 11
Drawings 11
Approvals 11
Placement of Standards 11
Grouting Mortar 11
Anchor Bolts 11
Concrete Testing and Reports 12
Photoelectric Control Unit 12
Power Source Connection/Access 12
Riser on Wood Pole 12
Wiring Methods at Fuseholder 12
Orientation of Streetlight Arm 13

Part IV

Other Requirements/Conditions
Inspection 13
USA Notification 13
Trees in the Vicinity of Streetlights 13

Part V

Drawings

STREETLIGHT LEGEND
Drawing Number 502 0101 (Sheet 1 of 1) Streetlight Legend

STREETLIGHT, GENERAL
Drawing Number 502 0105 (Sheet 1 of 1) Trench Detail
Drawing Number 502 0110 (Sheet 1 of 1) Riser Detail Circuit Breaker & Ground Rod
Drawing Number 502 0120 (Sheet 1 of 2) Side and Back Property Detail
(Sheet 2 of 2) Side and Back Property Detail

STREETLIGHT WIRING
Drawing Number 503 0101 (Sheet 1 of 6) Legend
(Sheet 2 of 6) Diagram, 120 or 277V System
(Sheet 3 of 6) Diagram, 208 or 240V System
(Sheet 4 of 6) Single Line Diagram
(Sheet 5 0f 6) Installation Requirements
(Sheet 6 of 6) Fusing Table

Table of Contents (continued)

30’ STEEL STREETLIGHT
Drawing Number 504 0201 (Sheet 1 of 8) 30' Steel Streetlight
(Sheet 2 of 8) Foundation Detail
(Sheet 3 of 8) Standard Installation Detail
(Sheet 4 of 8) Location Detail
(Sheet 5 of 8) Loc. Detail w/Fence Inside R/W
(Sheet 6 of 8) Loc. Detail w/Fence Outside R/W
(Sheet 7 of 8) Location Detail Back of Curb
(Sheet 8 of 8) Front Property Detail

12’ or 14’ DECORATIVE STREETLIGHT
Drawing Number 505 0201 (Sheet 1 of 5) 12' or 14' Decorative Streetlight
(Sheet 2 of 5) Foundation Detail
(Sheet 3 of 5) Standard Installation Detail
(Sheet 4 of 5) Location Detail
(Sheet 5 of 5) Front Property Detail

10’ CONCRETE STREETLIGHT
Drawing Number 507 0201 (Sheet 1 of 3) 10' Concrete Streetlight
(Sheet 2 of 3) Foundation Detail
(Sheet 3 of 3) Location Detail

STREETLIGHT METERING PEDESTAL
Drawing Number 510 0902 (Sheet 1 of 2) Streetlight Metering Pedestal
(Sheet 2 of 2) Streetlight Metering Pedestal

Introduction.

This specification covers the materials used in streetlight systems (Part I and II) as well as the installation requirements (Part III) and other requirements/conditions (Part IV) for the various types of streetlights used within the City of Lodi. Drawings associated with each type of streetlight and the wiring requirements are included at the end of the specifications (Part V).

Some materials are referenced to a specific manufacturer's product. This is done to identify quality, design and appearance. Alternative materials of equal quality and having the required characteristics can only be substituted subject to prior written approval by the City of Lodi with the burden of proof as to quality and suitability upon the contractor.

This version superceedes all prior versions.

Find the latest version at www.LodiElectric.com.

Part I

Material, General for all Types of Streetlights.

Driver. The driver shall be suitable for LED lighting and resulting power draw of fixture shall have a power factor greater than 90%. The driver shall properly operate the lamp with a line voltage variation of ±10% and shall have a starting current less than or equal to the operating current. Lamp wattage regulation shall be 1.5%, maximum, for each 1% variation in line voltage. The ballast shall be of the multivolt/multitap design (120/208/240/277 volt).

Surge Protection. Unit shall be able to withstand repeated surges of at least 10,000V.

Lamp. The lamp shall be LED. The lumen output shall be equal or greater to the lumens for HPS bulbs rated at 70W, 100W, 150W or 250W watts as specified on the plans.

Photoelectric Control. The photoelectric control unit shall be of the electronic type having twistlock (locking-type) mounting. Unit must have a minimum warrantied life of 12-years, and withstand and protect against a surge of 650 Joules. Unit shall accept a range of 105-305V AC, an ambient temperature range - 40º F to +158º F. The housing shall be U.V. stabilized polypropylene with solid brass the plug blades. Unit shall have an on-off ratio greater than 1:1 (to prevent threshold cycling) but not more than 1:1.5 (to conserve power). Acceptable controls are "Ripley LongLife II, 6390LL-BK".

Controller - Multiple Lights. The controller for multiple lights shall be capable of being mounted on a pole, shall have a photocontrol receptacle and enclosed in a NEMA 3 enclosure. The controller shall be solid-state or electro-mechanical, having contact

ratings of 60 amps @ 600 VAC with DPST switch. The coil rating shall be 208-240 volts. Acceptable controller is Permatrol® model MR6064.3.

Protection (fusing). All streetlight systems shall have protection at the source (the point of interconnection with the City's distribution system. The protection can be a circuit breaker or fuse(s) as specified on the plans. In addition, where three or more streetlights connect to a single source, i.e. a single circuit, standards shall have a dedicated fuse (for decorative aluminum standards this shall be installed in a box at the base of the light or in the nearest upstream box; for all other lights this shall be installed in the base of each standard). The fuseholders shall be of the "In-Line" type with insulating boots. Fuses shall be the Midget fast acting type with dimensions of 13/32" diameter and 1 1/2" length. The ratings shall be 600 VAC and interrupting of 100,000 A RMS symmetrical. Size shall be as specified on the plans or per the fusing table.

Acceptable products are:

Approved For All Locations	Dry-Locations Only (Transformers, Streetlight Bases, Etc.)
• Fuseholder: Bussmann® HEB-JJ (used for both 1 & 2 conductors on the line side) • Bussmann® Insulating Boots: -1 conductor, line and load: 2A0660 -2 conductors, line: 2A0661 • Fuse(s): Bussmann® KTK.	• Fuseholder: Littelfuse® LEB-JJ (used for both 1 and 2 conductors on the line side) • Littelfuse® Insulating Boots: -1 conductor, line and load: WPB-1 -2 conductors, line: WPB-2. • Fuse(s): Littelfuse® KLK.

Note: Insulation boots and fuseholders shall be from the same manufacturer, i.e. mixing products is not acceptable

Circuit breaker(s) shall be housed in a NEMA Type 3R enclosure with one (1) 2-pole circuit breaker, rating as shown on plans. Acceptable manufacturer is “Square D” QO Load Center Type 3R Cat. No. QO2-4L70RB with QO 2 pole circuit breaker.

Conduits.

- Rigid Steel Conduit – Galvanized rigid steel conduit shall be U.L. 6 listed and meet ANSI C80.1 specifications. The ¾” NPT threads (ANSI B1.20.1) shall be full cut and hot galvanized after cutting. Elbows and sweeps shall be manufacturer’s standard radius for the specified conduit size, minimum.
- HDPE – High Density Polyethylene (HDPE) conduits shall be smoothwall schedule-40, meeting NEMA TC7 and ANSI D1248 specifications. Color shall be gray. Conduits shall be equipped with SILICORE® inner lining or approved equivalent system for ease of installing conductor. Conduits shall be continuous i.e. couplings or fuse joints are not permitted. Couplings are permitted immediately adjacent to

streetlight foundations, junction boxes and/or power sources for connection of a PVC schedule-40 elbow to the HDPE conduit. Such coupling shall be of the compression type.

- PVC – Polyvinyl Chloride (PVC) conduits shall be schedule-40. Conduits, sweeps and elbows shall meet NEMA TC2 and TC3 specifications. Sweeps and elbows shall be the manufacturer's standard radius for the specified conduit size, minimum. Color shall be gray.

Junction Box. The junction box shall have outside dimensions of 14" by 19" and be 12" deep (approximately) with an access opening of 10" by 14" (approximately). It shall be equipped with a bolt down cover marked "STREETLIGHT". Two types of boxes are acceptable depending on location of box placement. 1) A high density reinforced polymer or concrete box and lid or 2) a HDPE box with either a HDPE non-hinged or T-type bolt-down lid. The HDPE box shall be green when used in landscape areas or gray for oher locations. HDPE boxes shall only be installed in grass, dirt, gravel or similar landscaping areas. Neither box is rated for vehicular traffic and should not be located in roads or driveways. Acceptable manufacturers are: Old Castle / Christy Concrete Products model N09 or Carson Industries model 1419-12, respectively – ALL BOXES MUST BE ORDERED WITH BOLT-DOWN-COVER OPTION.

Conductors. Conductors shall be stranded THWN copper of the gauge shown on the plans. Wire sizes shall be based on American Wire Gauge (AWG). The conductor diameter shall not be less than 98% of the specified AWG diameter. Provide sufficient conductors in each standard to permit bringing the fuses and connectors outside of the standard through the handhole (minimum 1.5 ft.)

Conductors shall be color coded as follows:

- Green - equipment grounding conductor;
- White - neutral for 120 volt systems;
- Gray - neutral for 277 volt systems;
- Black - the energized conductor for 120 volt systems and one of the energized conductors for 208 and 240 volt systems, and;
- Red - the other energized conductor for 208 and 240 volt systems
- Brown – the energized conductor for 277 volt systems.

Conductor Connectors. All conductor junction connectors shall be properly sized for the number and size of conductors to be connected and shall be separable without cutting the conductors. Wire nuts and splitbolt connectors are acceptable types of connectors. All conductor junction connections shall be capable of satisfactory operation under continuous submersion in water. The Dryconn™ silicone-filled wire connector Type KB - Aqua/Blue from King Innovation™ is an acceptable product. Other connectors may be waterproofed with the following product: The 3M™ Scotch® Scotchseal Compound #2229.

Grounding. Ground electrodes shall be one-piece lengths of galvanized steel rod or copper clad steel rod not less than 5/8 inches in diameter and 8 ft. in length. One (1) #6 AWG solid bare copper conductor shall be used to connect the ground electrode to the

grounding screw in the standard. The #6 copper conductor shall be continuous through the grounding screw in the standard and of sufficient length to reach a minimum of 1.5 ft. outside the standard through the handhole for connection to the grounding (equipment bonding) conductors. The ground electrode shall be connected to the ground rod using a ground rod clamp. Acceptable ground rod clamps are “Joslyn J8492AB” or “Blackburn JAB58H”.

Anchor Bolts. Anchor bolts shall be fabricated from carbon steel bar and conforming to ASTM F1554, Grade 55 specifications. One end of the anchor bolt is intended to be cast in concrete and shall have an “L” bend or bent hook. The other end shall be threaded and supplied with two hex nuts and two flat washers. The threaded end shall be galvanized a minimum of 12". Completely galvanized anchor bolts are acceptable.

Concrete. Concrete shall be ready-mixed in accordance with ASTM 94 and shall be sufficiently mixed to ensure complete uniformity of the batch. The concrete shall have a minimum compressive strength of 4000 PSI at twenty-eight (28) days. Absolute water-cement ratio shall not exceed 0.45. Slump shall not exceed four (4) inches without the approval of the City. Maximum normal coarse aggregate size shall not exceed one (1) inch. A minimum of six (6) bags of cement per yard of mix shall be used. Cement shall be Portland Cement Type II in accordance with ASTM C150, unless otherwise specified on the plans. Fine aggregate shall be in accordance with ASTM C33, with the exception that only natural sand shall be accepted. Coarse aggregate shall consist of clean, durable, hard-crushed stone, gravel, or a proper combination thereof, in accordance with ASTM C33. Only natural materials shall be accepted. Water for mixing and curing concrete shall be potable and free from injurious amounts of any substance that may be detrimental to concrete or anchor bolts. No additives shall be used in concrete without the written approval of the City. Chlorides shall not be used in concrete mix.

Grouting Mortar. Non-shrink, non-metallic grouting mortar such as Masterflow 713 Grout (manufactured by Master Builders Division of Martin Marietta, Corp.) or an approved equal shall be mixed and placed as recommended by the manufacturer.

Part II

Material, Specific for Various Types of Streetlights

A. Steel Standard with Arm and Luminaire, 30 ft. Mounting Height.

Steel Standard. The steel standard shall be equivalent in size and shape to the "Valmont" Cat. No. DS50-750A270-8S-GV-SFBC. The standard shall be/have:

- Round tapered shaft with a welded anchor base plate and welded flange for a bolted arm attachment. The taper (O.D.) of the pole shall range from 7.5" to 3.7", approximately, base to top.
- Hot-dipped galvanized finish per ASTM A123.
- Equipped with a 4" by 6.5", nominal, reinforced rim, handhole located along the vertical centerline of the arm's mounting flange 1' to 2' above the anchor base plate. Handhole shall be free of sharp edges or points. Stainless steel socket flush head cap screws (Allen type) to be supplied with each handhole cover. The handhole cover shall be attached to the pole utilizing two screws, i.e. one top and one bottom of handhole cover as viewed in the installed position.
- Equipped with ground lug accepting #6 AWG copper conductor accessible through the handhole only.
- Supplied with a pole-top cap secured with set screws or set bolts.
- Designed to yield a 30' nominal luminaire mounting height with the specified arm.
- Manufactured with a welded (top and bottom) anchor base plate. The base plate shall be of ASTM A36 steel plate and shall be capable of withstanding full bending moment of the shaft. The base shall accept a bolt circle range from 10" to 11" in diameter, i.e. having a slotted bolt hole.

- Supplied with four (4) hot dipped galvanized L-type anchor bolts, 1” x 36” x 4” and anchor bolt cover. The bolt cover shall be the “full base cover” type having a two-piece assembly secured together with two fasteners.
- Supplied with one 8’ long arm. The upsweep (rise) height of the arm shall be 3’ nominal. The arm to pole connection shall have a rain-tight fitting and be the bolted type. The arm shall accept a luminaire slip fitter with a 1¼” through 2” IPS pipe size range (1.660-2.276 in. O.D.).

Luminaire. The luminaire shall be equivalent in size, shape and design to the General Electric series Evolve LED Roadway Lighting.
Approved Luminaire Part numbers:

G.E. LED Part No.	Approx. IES Type	LED Wattage	(HPS Equiv.)	Lumens
ERL1 0 04 B3 40 A GRAY	II-Wide	31 W	(70 Watt HPS) (100 Watt HPS) (175 Watt MV)	4,000
ERL1 0 04 C3 40 A GRAY	III	31 W	(70 Watt HPS) (100 Watt HPS) (175 Watt MV)	4,000
ERL1 0 04 D3 40 A GRAY	IV	31 W	(70 Watt HPS) (100 Watt HPS) (175 Watt MV)	4,000
ERL1 0 09 C3 40 A GRAY	III	84 W	(250 Watt HPS) (400 Watt MV)	9,000

The luminaire shall be/have:

- LED with multivolt design.
- Watt & lumen rating to be as shown on the plans.
- Narrow Asymmetric light distribution pattern.
- Vibration proof refractor latch to prevent accidental opening of the door.
- Adjustable slipfitter to accept IPS pipe size ranging from 1¼" through 2” without rearranging of mounting parts and shall permit a plus and minus 5° adjustment from horizontal.
- Cast aluminum housing and equipped with twist-lock type photocell receptacle. Photocell receptacle shall be adjustable to permit orientation of the photoelectric control unit.

B. Aluminum Standard with Post Top Luminaire, 12 ft. or 14 ft. Mounting Height. (Decorative Standard)

Aluminum Standard. The color shall be, RAL 7040, "Window Gray". For new developments meeting certain size criteria, Lodi Electric may offer the development a second color option of "Rail Bronze" Custom-Match-Color 049/62070, to be used throughout the entire development.

The aluminum standard shall be equivalent in size and shape to the "Holophane Unique Solutions" Charleston Series Cat. No:

"Window Gray", RAL 7040

Hgt	Mfgr.	P/N
12'	Holophane	CH A 12 S4J 12 P07 ABG RAL7040 including BC(.75x.70)-T(3.0x3.0)-level plate
14'	Holophane	CH A 14 S4J 12 P07 ABG RAL7040 including BC(.75x.70)-T(3.0x3.0)-level plate

"Rail Bronze", Tiger Drylac 049/62070

Hgt	Mfgr.	P/N
12'	Holophane	CH A 12 S4J 12 P07 ABG CMC = Tiger Drylac 049/62070 including BC(.75x.70)-T(3.0x3.0)-level plate
14'	Holophane	CH A 14 S4J 12 P07 ABG CMC = Tiger Drylac 049/62070 including BC(.75x.70)-T(3.0x3.0)-level plate

- All aluminum, one-piece construction with a fluted base design. The shaft shall be 4" diameter straight smooth design, having a 3" integral tenon and a transitional step for luminaire mounting. The base shall be copper free, cast aluminum not less than 39" tall with not less than 5" diameter fluted section. The shaft shall be extruded from aluminum, ASTM alloy 6061 and shall be heat treated to a T6 temper. The base casting or castings and the shaft shall be securely welded to form an integral design. All exposed welds below 8 ft. shall be ground smooth.
- Overall height of 12 ft. or 14 ft., as specified, with a base diameter not less than 10.5". The base shall accept a bolt circle of 8" diameter and be equipped with not less than 7/8" slotted mounting holes.
- Equipped with a door 3.5" x 5.5" H (approximately) or removable access panel at the base for anchorage and wiring access. The door or access panel and all other mounting hardware shall be tamper resistant.
- Supplied with four (4) hot dipped galvanized L-type anchor bolts, 3/4" x 24" x 3". Holophane standards shall include a factory approved leveling plate.
- Equipped with grounding screw inside base and accessible through the door access panel, paint shall be removed from the metal surface under gounding screw.
- Paint finish utilizing a smooth semigloss premium TGIC (triglycidyl isocyanurate) polyester powder coating. The paint finish process shall include a pretreatment system with a phosphate treatment followed by a powder coating system including drying and curing and any additional manufacturer's reccomendations for preparation and application. The color shall be "RAL 7040 - Window Gray". For new developments meeting certain criteria, Lodi Electric may offer a second color of "Rail Bronze" Custom-Match-Color 049/62070, to be used throughout the entire development.

Luminaire. The luminaire shall be equivalent in size, shape and design to the "Holophane, Utility GrandVille®" series GVD with NEMA twistlock photocontrol. The "Holophane" catalog numbers for the acceptable LED luminaire with all attachments and multitap driver are:

"Window Gray", RAL 7040

Holophane Part No.	LED	(Equiv. HPS)	Lumens
GVD2 P20 40K AS M A 6 N S A GVBANDA H/PCLL Color: RAL7040	39 W	(100 W)	5,247
GVD2 P30 40K AS M A 6 N S A GVBANDA H/PCLL Color: RAL7040	60 W	(150 W)	7,440

"Rail Bronze", Tiger Drylac 049/62070

Holophane Part No.	LED	(Equiv. HPS)	Lumens
GVD2 P20 40K AS M A 6 N S A GVBANDA H/PCLL Color: CMC Tiger Drylac 049/62070	39 W	(100 W)	5,247
GVD2 P30 40K AS M A 6 N S A GVBANDA H/PCLL Color: CMC Tiger Drylac 049/62070	60 W	(150 W)	7,440

The luminaire shall be/have:

- LED design having a lumens level as shown on the plans.
- Acorn shaped. The optical properties of the assembly shall redirect approximately half of the upward light down into the refractor.
- The refractor shall distribute the light in an asymmetric lunar optic.
- Equipped with a decorative band at the junction of the refractor and the reflector.
- Equipped with a 5" standard ("Holophane") finial on top of the reflector.
- Luminaire housing of cast copper free aluminum enclosing the driver and photoelectric receptacle. A "window" shall be provided in the housing to allow light to reach the photoelectric cell. The driver assembly shall be of a plug-in design. The slipfitter shall accept a 3" O.D. tenon ranging from 2-7/8" to 3-1/8".
- Designed such that the reflector/refractor assembly can be installed at any rotational angle with respect to the luminaire housing.
- Paint finish utilizing a smooth semigloss premium TGIC polyester powder coating. The paint finish process shall include a pretreatment system with a phosphate treatment followed by a powder coating system including drying and curing.

C. Concrete Standard with Post Top Luminaire, 10 ft. Mounting Height.

Concrete Standard. The concrete standard is a City of Lodi specific design. It is generally supplied by the City. The standard may be obtained directly from the manufacturer by approval of the City of Lodi.

- Supplied with four (4) hot dipped galvanized L-type anchor bolts 1/2" x 12" x 3".

Luminaire. The luminaire shall be equivalent in size, shape and design to the "Holophane, Prismasphere® Series". The "Holophane" catalog number for the acceptable luminaire with multitap driver:

Holophane Part No.	LED Watts	(Equiv. HPS)	Lumens
PRD 40 4K AS C RAL7040 5 N	40 Watts	(70 Watts) (100 Watts)	3,660
PRD 60 4K AS C RAL7040 5 N	60 Watts	(150 Watts)	5,170

The luminaire shall be/have:

- LED, having lumens & wattage as shown on the plans.
- An 18" acrylic prismatic sphere mechanically attached and sealed to a mounting ring. The prismatic sphere shall control brightness and shall maximize utilization and uniformity. A soft upward glow is allowed.
- Luminaire housing of cast copper free aluminum enclosing the electrical ballast. The housing shall be an eight sided convex contour with a 7" diameter capital for mounting to the concrete standard with set screws.
- Paint finish utilizing a smooth semigloss premium TGIC polyester powder coating. The paint finish process shall include a pretreatment system with a phosphate treatment followed by a powder coating system including drying and curing. The color shall be "RAL 7040 – Window Gray".

Part III

Installation Requirements.

General. All equipment shall be installed in accordance with the manufacturer's published installation procedures unless otherwise noted on the plans.

Drawings. The streetlight system shall be installed in accordance with these specifications including applicable drawings, which are part of these specifications, and the drawing(s) for the specific project.

Approvals. All materials are subject to approval by the City of Lodi, Electric Utility Department prior to installation. Material submittals, for approval, shall be forwarded to the Electric Utility Department, 1331 S. Ham Lane, Lodi CA 95242-3995.

Placement of Standards. Standards shall not be placed on foundations until at least seven (7) days after placement of the foundation concrete. Standards shall be installed plumb (vertical). Shimming is not acceptable. Adjustments shall be made with the double nut arrangement. Concrete standards shall be installed directly onto the foundation, i.e. the concrete standard shall rest on the foundation. Leveling nuts shall not be used.

Grouting Mortar. Grouting mortar shall be placed between the base of the standard and the foundation. It shall be solidly packed a minimum of three (3) inches under the standard as measured from the outside edge of the base plate and be struck vertical with the outside edge of the base plate to the top of the foundation. The thickness of the grouting mortar shall be a minimum of one (1) inch, i.e. the distance between the base plate and the foundation shall be one (1) inch minimum. The grouting requirement does not apply to concrete standards.

Anchor bolts. Deviations from specified positions of anchor bolts after concrete has set shall not exceed the following:

- Horizontal distance between centers of adjacent anchor bolts shall be within plus or minus one-sixteenth (±1/16) inch.
- Horizontal distance between diagonally opposite anchor bolts shall be within plus or minus three-sixteenth (±3/16) inch.
- Elevation of the top of the lowest anchor bolt in a set shall be such that one complete thread will be protruding through the top nut when the light standard is installed on the foundation. The elevation of the highest bolt shall not exceed the lowest bolt by more than one-fourth (1/4) inch. A maximum of six (6) threads is allowed through the top nut after installation of the light standard. Anchor bolts shall not be cut to meet these requirements.
- The anchor bolts shall be positioned in the foundation such that the deviation of the centerline of the bolt pattern with respect to the centerline of the foundation, i.e. the centerline perpendicular to the street, is less than one-half (1/2) inch.
- The anchor bolts shall be positioned in a square pattern with an orientation and on a bolt circle diameter as shown on the drawings.

Concrete Testing and Reports. The Contractor, unless otherwise instructed, shall be required to make a set of compressive test specimens, each set consisting of four (4) compressive test cylinders made in accordance with ASTM C31. One set of compressive test specimens shall be made from each truck load (batch). Testing of the cylinders shall be handled by the Contractor through a qualified testing laboratory and the cost of testing shall be borne by the Contractor. Contractor shall require the laboratory to send the compressive test reports to the City of Lodi, Electric Utility Department (EUD). One sample shall be tested at seven (7) days and two (2) at twenty-eight (28) days. One cylinder shall be held for a 45-day break in the event of a low break. The Contractor shall identify low break test. The Contractor shall maintain a record identifying the location of all streetlight foundations poured from each truck load. A copy of these records shall be forwarded to the Electric Utility Department.

Photoelectric Control Unit. The photoelectric control unit shall be installed with the sensing element facing north or away from other light sources.

Power Source Connection/Access. Connection to the power source (point of interconnection) at utility poles, padmount transformers, secondary boxes or other source will be made by the Electric Utility Department. Only authorized City of Lodi employees shall be permitted access to City owned/maintained electrical equipment. The contractor shall provide and install all conductors, fuseholders, insulating boots, fuses and/or circuit breakers with enclosures up to and including the point of interconnection. The contractor shall coordinate work at the point of interconnection with the Electric Utility Department - call (209) 333-6817.

Riser on Wood Pole. The 90 degree elbow and the first 10 ft. segment of conduit going up the pole shall be rigid steel conduit. Conduit and conductor shall be provided to reach the secondary level on the pole. Conductor to be coiled and tied to pole above the circuit breaker enclosure. Note: The Electric Utility Department will extend the conduit and conductor from the circuit breaker enclosure to the secondary level on the pole, at the Developer's/Contractor's expense.

Wiring Methods at Fuseholder. The insulation on #12 AWG conductor shall be stripped 1.5" and the exposed conductor bent 180 degrees at the midpoint forming a "double #12 AWG" arrangement, then inserted into the set screw connector on the fuseholder and the set screw properly tightened. The insulation on #8 AWG conductor shall be stripped 0.75" and inserted into the set screw connector on the fuseholder and the set screw properly tightened. When three or more lights are supplied from one source, i.e. one circuit, the line side of the fuseholder in each light will have two conductors inserted into the set screw connector, except for the last light on the circuit. The single hole set screw connector can accommodate up to two (2) #8 AWG conductors. The proper insulating boot, i.e. one or two conductor(s) design, shall be installed at both the line and load side of the fuseholder. The fuseholder shall be installed such that, when separated to gain access to the fuse, the fuse remains (is secured) in the load side part of the fuseholder.

Orientation of Streetlight Arm. On a streetlight having the luminaire mounted on an arm, the arm shall be oriented over the street and perpendicular to the centerline or the

tangent to the centerline of the street for straight and curved street alignments, respectively.

Part IV

Other Requirements/Conditions.

Inspections. The streetlight system shall be inspected by the respective City departments at a minimum upon reaching the following milestones during construction:

Construction Milestone:		Obtain Inspection From:
Compaction testing	→	Lodi Public Works, (209) 333-6706
During conduit installation	→	Lodi Electric, (209) 333-6817
Prior to placement of concrete in the excavation for the foundation	→	Lodi Electric, (209) 333-6817
Upon completion of the streetlight system	→	Lodi Electric, (209) 333-6817

USA Notification. The contractor shall do no excavation or directional boring prior to all utility agencies have been given the opportunity to locate and mark their facilities in the field. For locating underground facilities call USA (Underground Service Alert) at 1-800-227-2600.

Trees in the Vicinity of Streetlights. Trees, whether private or public, that have grown into the right-of-way and is obstructing the light pattern may be trimmed to improve the light level on the roadway. Any trimming and/or pruning shall be performed in accordance with ANSI Standards.

STREETLIGHT LEGEND:

3 #12 AWG THWN COPPER CONDUCTORS IN 1" CONDUIT.

3 #8 AWG THWN COPPER CONDUCTORS IN 1" CONDUIT.

OVERHEAD SECONDARY BY CITY OF LODI.

SECONDARY SERVICE JUNCTION BOX, BY CITY OF LODI.

STREETLIGHT JUNCTION BOX.

POLE–MOUNT TRANSFORMER, BY CITY OF LODI.

PADMOUNT TRANSFORMER, BY CITY OF LODI.

G STANDARD WITH LUMINAIRE ON 8' ARM AND GROUNDING CONDUCTOR.

G/F STANDARD WITH LUMINAIRE ON 8' ARM, GROUNDING CONDUCTOR AND FUSE.

G STANDARD WITH POST TOP LUMINAIRE AND GROUNDING CONDUCTOR.

G/F STANDARD WITH POST TOP LUMINAIRE, GROUNDING CONDUCTOR AND FUSE.

WOOD UTILITY POLE WITH RISER.

XX FUSE SIZE (RATING) FOR FUSES NOT LISTED IN THE FUSE TABLE. XX = FUSE RATING IN AMPERE.

XXXX TYPE OF STREETLIGHT:

(XXXX)	
10S	100 W HPS ON STEEL STANDARD.
25S	250 W HPS ON STEEL STANDARD.
10W	100 W HPS ON WOOD POLE, BY CITY OF LODI.
25W	250 W HPS ON WOOD POLE, BY CITY OF LODI.
10D2	100 W HPS POST TOP LUMINAIRE ON 12' DECORATIVE STANDARD.
15D4	150 W HPS POST TOP LUMINAIRE ON 14' DECORATIVE STANDARD.
7C	70 W HPS POST TOP LUMINAIRE ON CONCRETE STANDARD.
E	EXISTING.
F	FUTURE.

Drawing name: M:\DATA\CAD\Standards\STL\0502\0101.dwg Plotted on: Feb. 17, 2011 - 11:33am

No.	REVISIONS	DATE	BY	CK'D	APP'D
1	ADDED GROUNDING CONDUCTOR & FUSE	5/17/04	CW	Ams	

CITY OF LODI
ELECTRIC UTILITY DEPARTMENT

CONSTRUCTION STANDARD

STREETLIGHT LEGEND

DATE	DRAWN	DESIGNED	CHECKED	APPROVAL	SHEET 1 OF 1 / REVISION 1	502 0101
22JAN04	RT	HH	Ams			

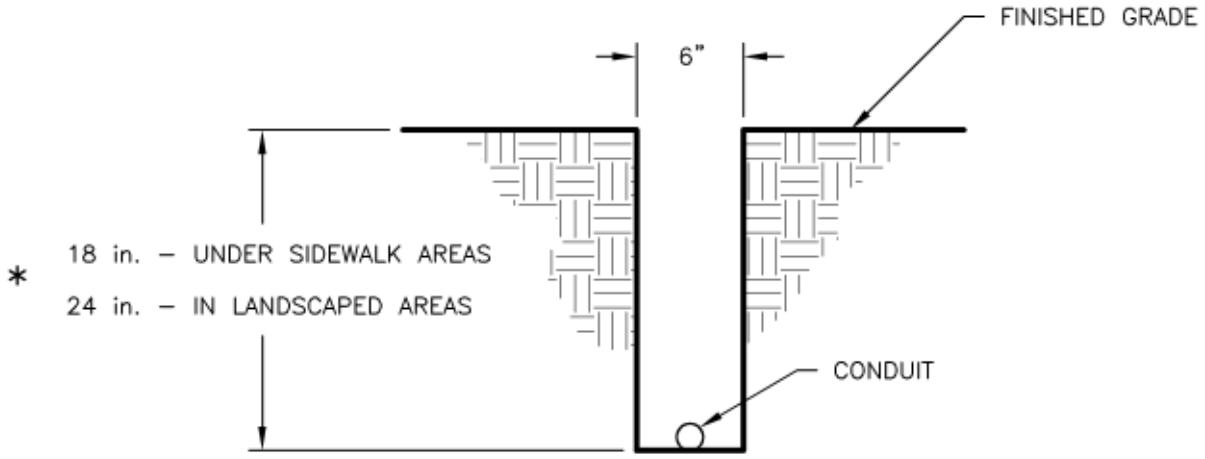

UNDER OR BACK OF SIDEWALK

DETAIL 1
90% COMPACTION

* NON STANDARD TRENCH DEPTHS – REQUIRES EUD APPROVAL IN WRITING

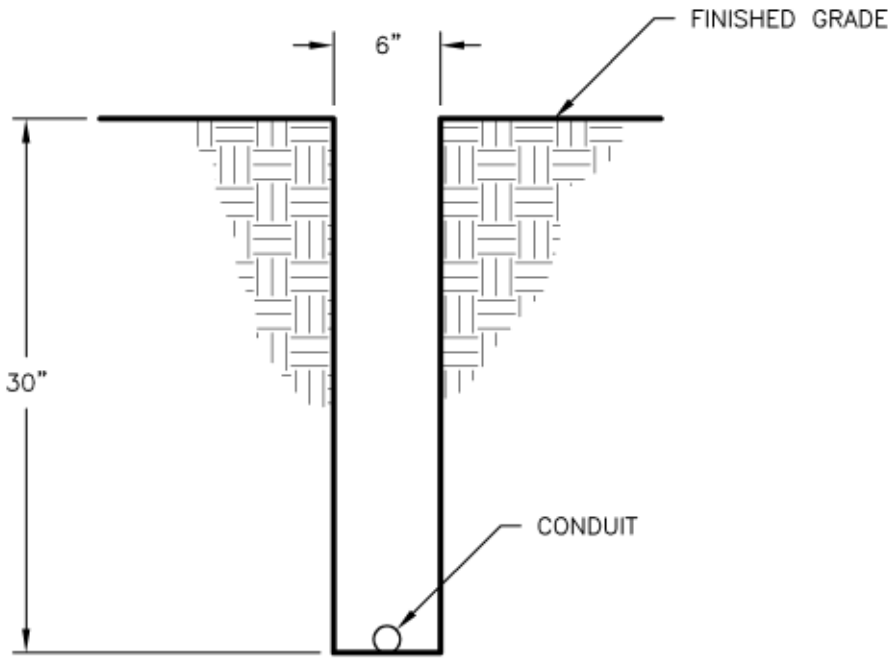

STREET CROSSING

DETAIL 2
95% COMPACTION

Drawing name: M:\DATA\CAD\Standards\STL\0502\0105.dwg Plotted on: Feb. 17, 2011 - 11:36am

No.	REVISIONS	DATE	BY	CK'D	APP'D
2	ABBREVIATION REVISION	6/15/04	CW	AMS	

CITY OF LODI
ELECTRIC UTILITY DEPARTMENT

CONSTRUCTION STANDARD
STREETLIGHT GENERAL
TRENCH DETAIL

DATE	DRAWN	DESIGNED	CHECKED	APPROVAL	SHEET 1 OF 1 / REVISION 2	502 0105
18APR01	CW	AMS	AMS			

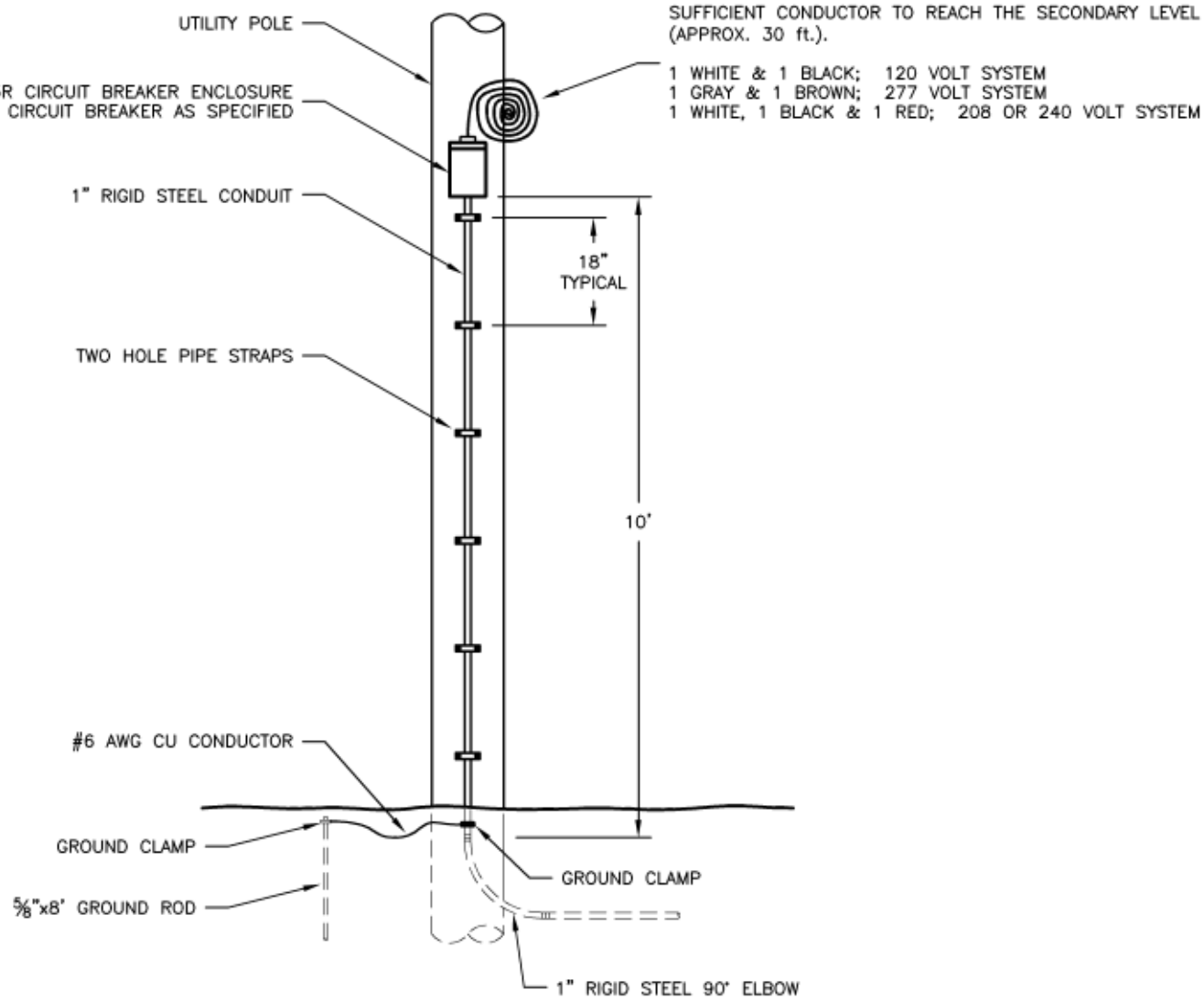

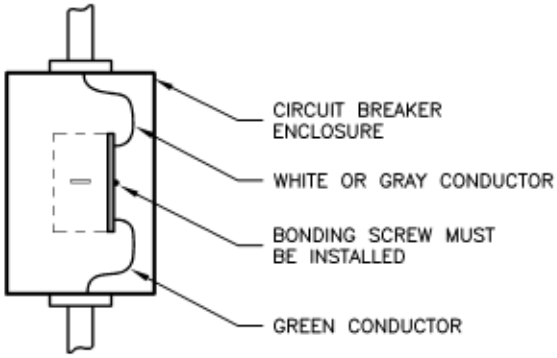

GROUNDING DETAIL
WITH CIRCUIT BREAKER

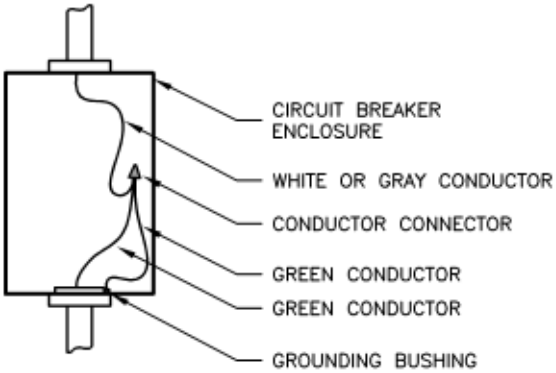

GROUNDING DETAIL
WITHOUT CIRCUIT BREAKER

Drawing name: M:\DATA\CAD\Standards\STL\0502\0110.dwg Plotted on: Feb. 17, 2011 - 11:35am

No.	REVISIONS	DATE	BY	CK'D	APP'D
2	ADDED GRAY WIRE COLOR	6/7/05	CW		
1	ABBREVIATION REVISION	6/15/04	CW	AMS	

CITY OF LODI
ELECTRIC UTILITY DEPARTMENT

CONSTRUCTION STANDARD

STREETLIGHT GENERAL
RISER DETAIL CIRCUIT BREAKER & GROUND ROD

8FEB02	CW	AMS	AMS		SHEET 1 OF 1	502 0110
DATE	DRAWN	DESIGNED	CHECKED	APPROVAL	REVISION 2	

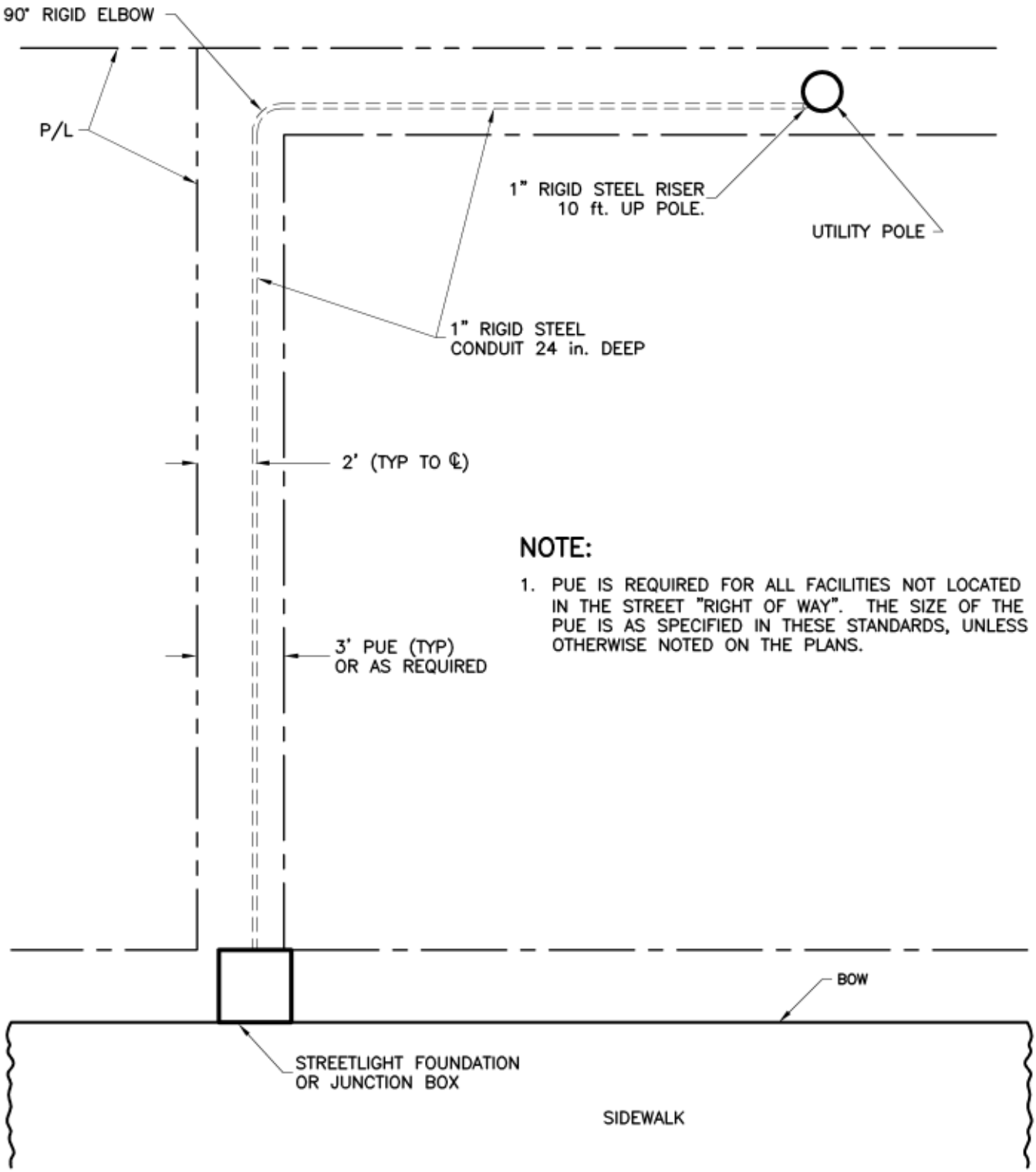

NOTE:

1. PUE IS REQUIRED FOR ALL FACILITIES NOT LOCATED IN THE STREET "RIGHT OF WAY". THE SIZE OF THE PUE IS AS SPECIFIED IN THESE STANDARDS, UNLESS OTHERWISE NOTED ON THE PLANS.

30' STEEL STREETLIGHT

Drawing name: M:\DATA\CAD\Standards\STL\0502\0120-1.dwg Plotted on: Feb. 17, 2011 - 11:35am

No.	REVISIONS	DATE	BY	CK'D	APP'D
3	ABBREVIATION REVISION	6/15/04	CW	Ams	

CITY OF LODI
ELECTRIC UTILITY DEPARTMENT

CONSTRUCTION STANDARD
STREETLIGHT GENERAL
SIDE AND BACK PROPERTY DETAIL

DATE	DRAWN	DESIGNED	CHECKED	APPROVAL	SHEET 1 OF 2 / REVISION 3	502 0120
3FEB02	CW		Ams			

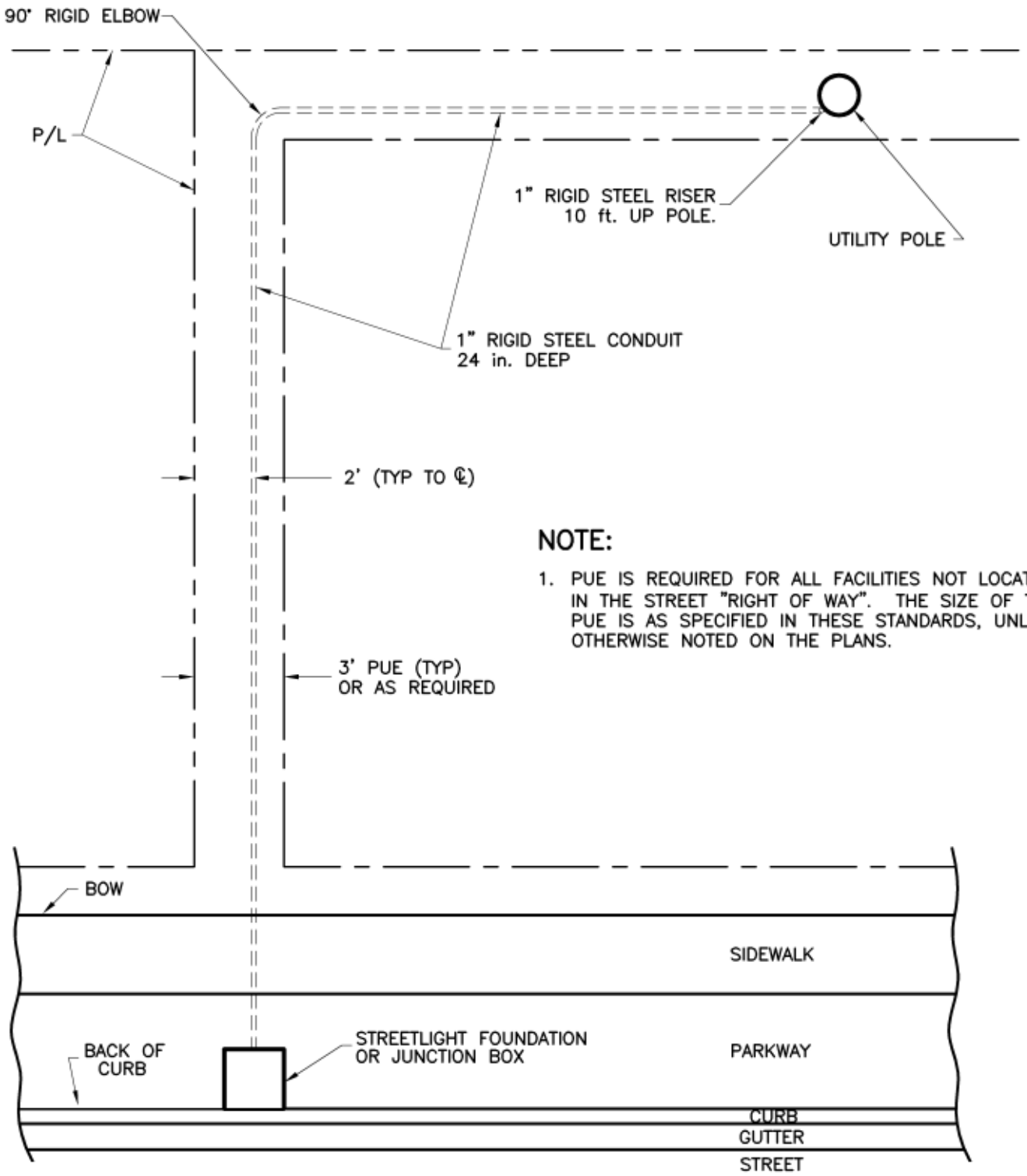

NOTE:

1. PUE IS REQUIRED FOR ALL FACILITIES NOT LOCATED IN THE STREET "RIGHT OF WAY". THE SIZE OF THE PUE IS AS SPECIFIED IN THESE STANDARDS, UNLESS OTHERWISE NOTED ON THE PLANS.

10' CONCRETE, AND 12' OR 14' DECORATIVE STANDARDS

Drawing name: M:\DATA\CAD\Standards\STL\0502\0120-2.dwg Plotted on: Feb. 17, 2011 - 11:34am

No.	REVISIONS	DATE	BY	CK'D	APP'D
3	ABBREVIATION REVISION	6/15/04	CW	AMS	

CITY OF LODI
ELECTRIC UTILITY DEPARTMENT

CONSTRUCTION STANDARD
STREETLIGHT GENERAL
SIDE AND BACK PROPERTY DETAIL

DATE	DRAWN	DESIGNED	CHECKED	APPROVAL	SHEET 2 OF 2 / REVISION 3	502 0120
3FEB02	CW		AMS			

LEGEND:

SEE SPECIFICATIONS FOR ACCEPTABLE MATERIALS.

- GROUND ELECTRODE
- CONDUCTOR CONNECTOR
- IN–LINE FUSE WITH INSULATING BOOTS
- SOURCE
- STREETLIGHT
- FUSE

NOTES:

1. FUSES SHALL BE MIDGET FAST ACTING.
2. FUSE SIZE SHALL BE PER THE FUSING TABLE OR AS SHOWN ON THE JOB SPECIFIC DRAWINGS.
3. PROTECTION AT THE SOURCE GENERALLY WILL BE FUSE(S) UNLESS OTHERWISE NOTED ON THE JOB SPECIFIC DRAWINGS. A CIRCUIT BREAKER, WITH APPROPRIATE ENCLOSURE, MAY BE UTILIZED IN–LIEU OF FUSES.

Drawing name: M:\DATA\CAD\Standards\STL\0503\0101-1.dwg Plotted on: Feb. 18, 2011 - 8:35am

No.	REVISIONS	DATE	BY	CK'D	APP'D
1					

CITY OF LODI
ELECTRIC UTILITY DEPARTMENT

CONSTRUCTION STANDARD
STREETLIGHT WIRING
LEGEND

22JAN04	RT	HH	AMS		SHEET 1 OF 6	503 0101
DATE	DRAWN	DESIGNED	CHECKED	APPROVAL	REVISION	

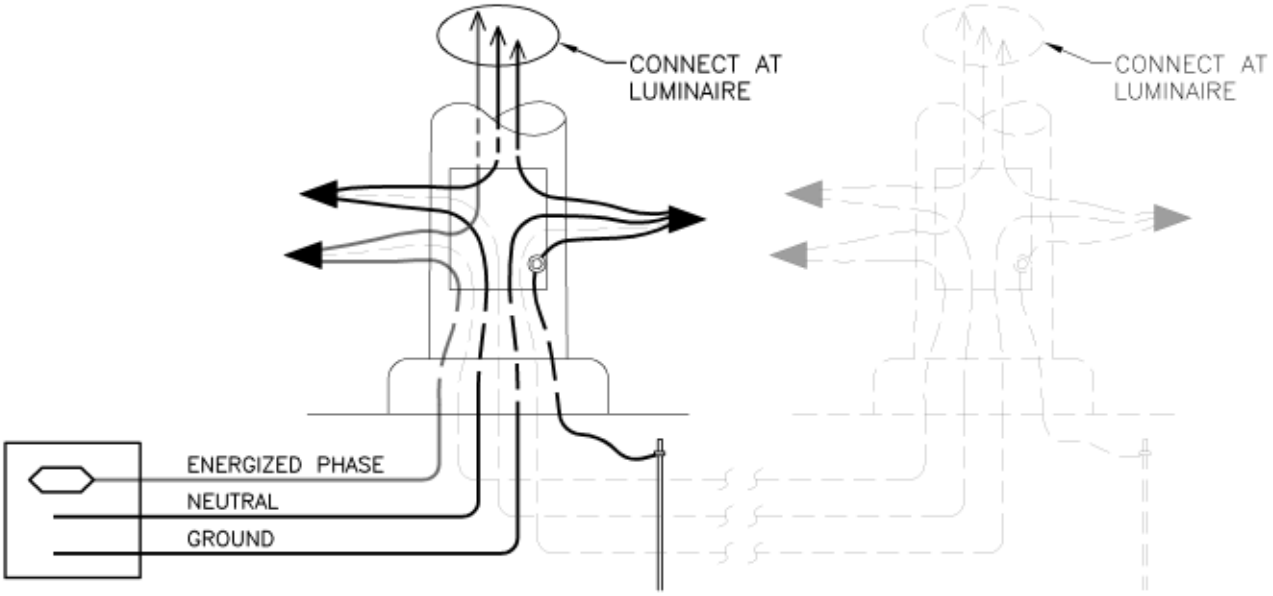

MAXIMUM TWO LIGHTS PER SOURCE

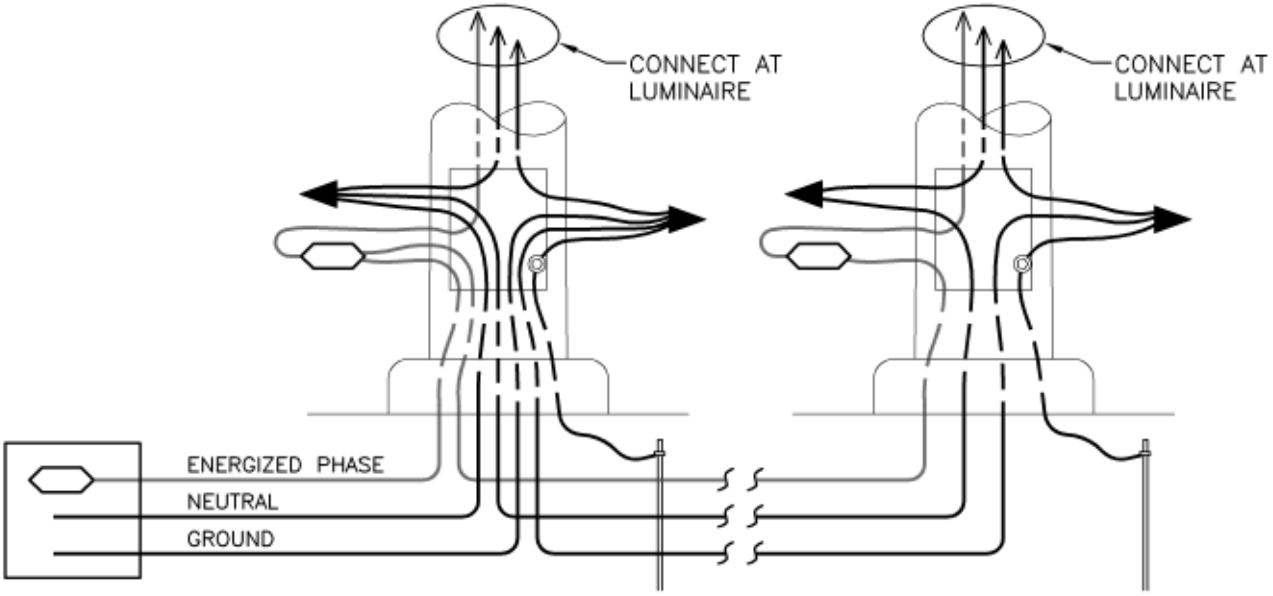

THREE OR MORE LIGHTS PER SOURCE

VOLTAGE	ENERGIZED PHASE	NEUTRAL	GROUND
120V	BLACK	WHITE	GREEN
277V	BROWN	GRAY	GREEN

Drawing name: M:\DATA\CAD\Standards\STL\0503\0101-2.dwg Plotted on: Feb. 18, 2011 - 8:36am

No.	REVISIONS	DATE	BY	CK'D	APP'D
1	ADDED WIRE COLOR CHART	6/7/05	CW		

CITY OF LODI
ELECTRIC UTILITY DEPARTMENT

CONSTRUCTION STANDARD
STREETLIGHT WIRING DIAGRAM
120 OR 277 VOLT SYSTEM

22JA04	RT	HH	AMS		SHEET 2 OF 6	503 0101
DATE	DRAWN	DESIGNED	CHECKED	APPROVAL	REVISION 1	

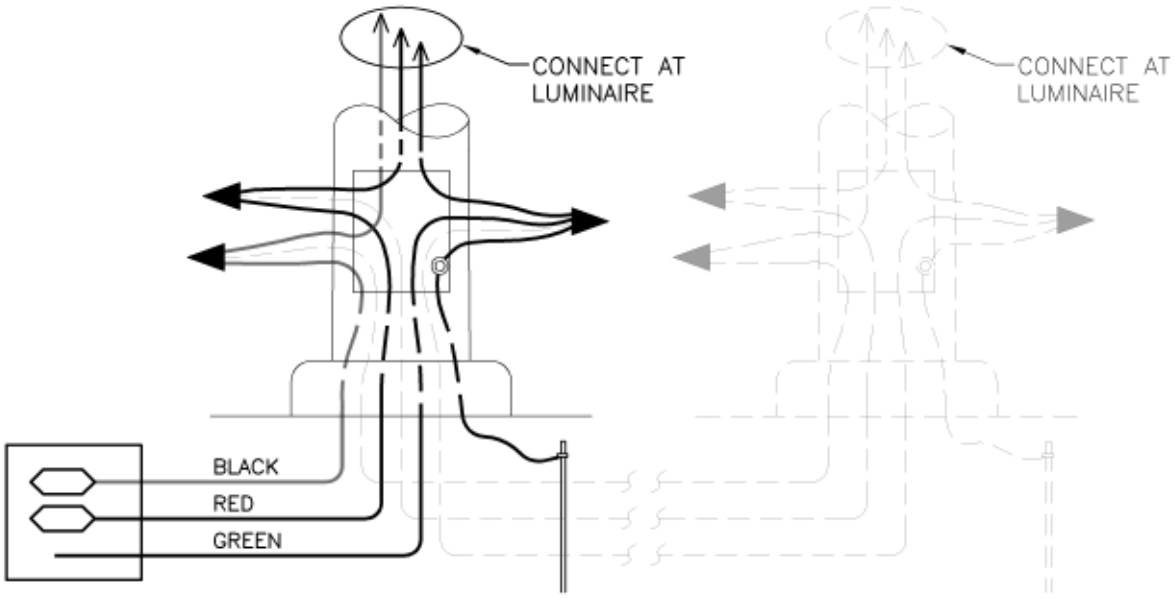

MAXIMUM TWO LIGHTS PER SOURCE

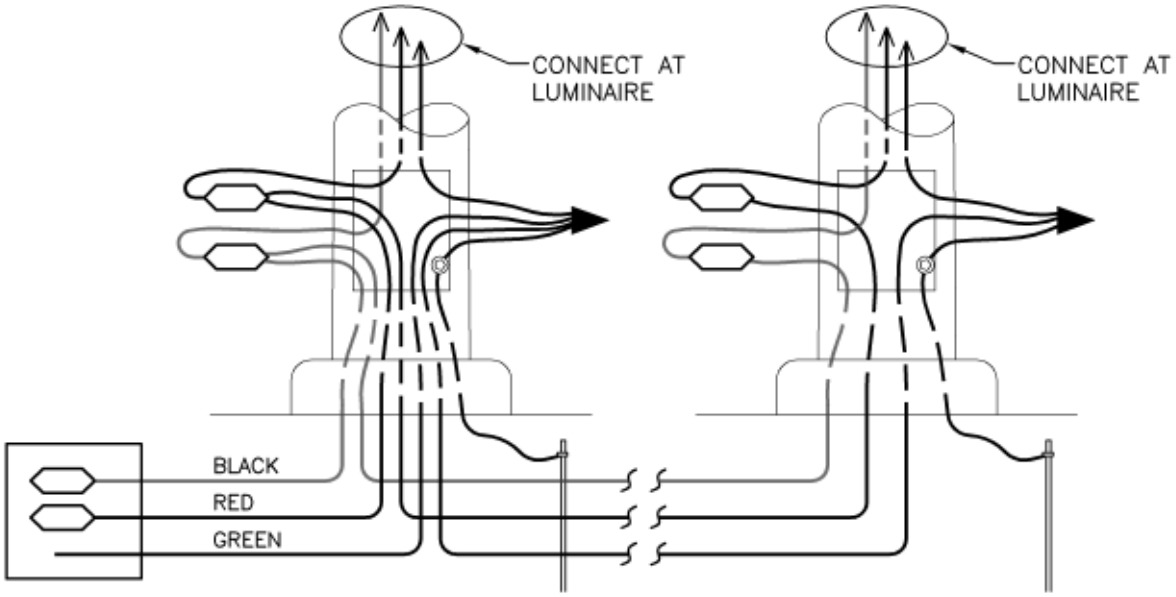

THREE OR MORE LIGHTS PER SOURCE

Drawing name: M:\DATA\CAD\Standards\STL\0503\0101-3.dwg Plotted on: Feb. 18, 2011 - 8:56am

No.	REVISIONS	DATE	BY	CK'D	APP'D
1					

CITY OF LODI
ELECTRIC UTILITY DEPARTMENT

CONSTRUCTION STANDARD
STREETLIGHT WIRING
DIAGRAM
208 OR 240 VOLT SYSTEM

22JAN04	RT	HH	AMS		SHEET 3 OF 6	503 0101
DATE	DRAWN	DESIGNED	CHECKED	APPROVAL	REVISION	

SINGLE STREETLIGHT

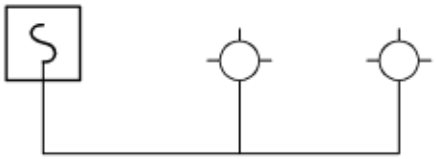

MAXIMUM, 2 STREETLIGHTS

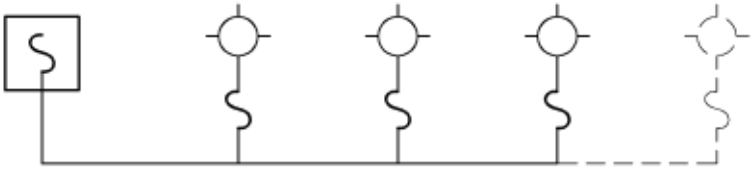

3 OR MORE STREETLIGHTS

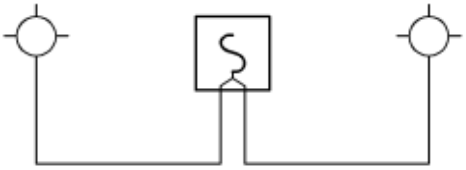

MAXIMUM, 1 STREETLIGHT EACH DIRECTION

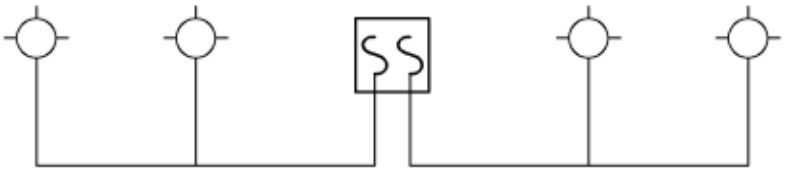

MAXIMUM, 2 STREETLIGHTS EACH DIRECTION

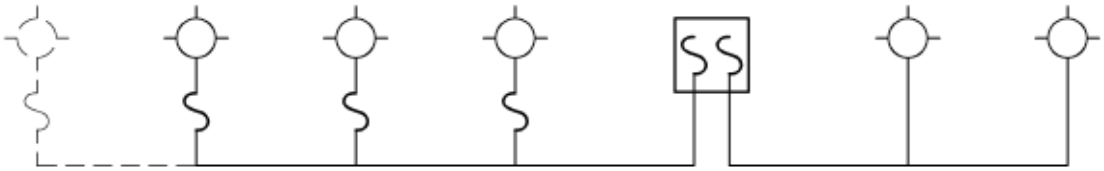

3 OR MORE STREETLIGHTS

MAXIMUM, 2 STREETLIGHTS

Drawing name: M:\DATA\CAD\Standards\STL\0503\0101-4.dwg Plotted on: Feb. 18, 2011 - 8:56am

No.	REVISIONS	DATE	BY	CK'D	APP'D
1					

CITY OF LODI
ELECTRIC UTILITY DEPARTMENT

CONSTRUCTION STANDARD
STREETLIGHT WIRING
SINGLE LINE DIAGRAM

22JAN04	RT	HH	AMS		SHEET 4 OF 6	503 0101
DATE	DRAWN	DESIGNED	CHECKED	APPROVAL	REVISION	

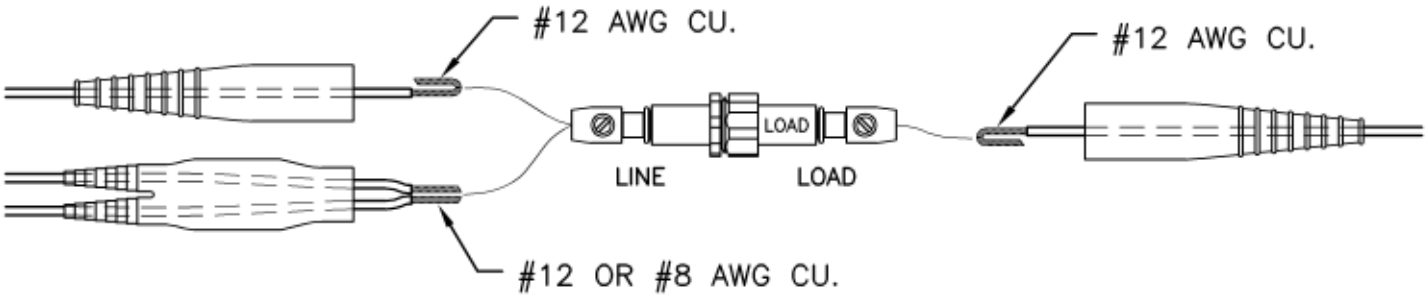

FUSE HOLDER, CONDUCTOR AND INSULATING BOOTS

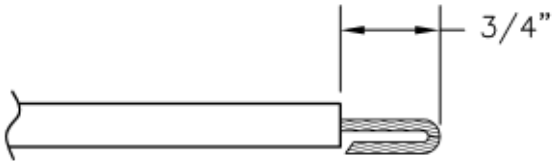

SINGLE #12 AWG CU. CONDUCTOR

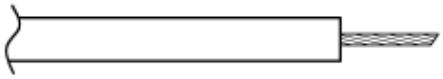

SINGLE #8 AWG CU. CONDUCTOR

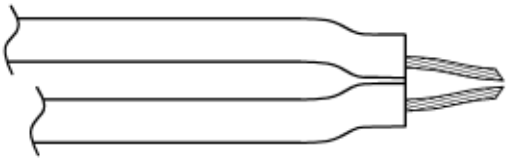

TWO #12 OR #8 AWG CU. CONDUCTORS

CONDUCTOR PREPARATION AT FUSE HOLDER

Drawing name: M:\DATA\CAD\Standards\STL\0503\0101-5.dwg Plotted on: Feb. 18, 2011 - 8:57am

No.	REVISIONS	DATE	BY	CK'D	APP'D
1					

CITY OF LODI
ELECTRIC UTILITY DEPARTMENT

CONSTRUCTION STANDARD
STREETLIGHT WIRING
INSTALLATION REQUIREMENTS

22JAN04	RT	HH	AMS		SHEET 5 OF 6	503 0101
DATE	DRAWN	DESIGNED	CHECKED	APPROVAL	REVISION	

STREETLIGHT FUSE SIZING

LUMINAIRE WATTAGE (WATTS)		AMPS PER LIGHT (0.95 PF)			
		120V	208V	240V	277V
30	LED	0.26	0.15	0.13	0.11
40	LED	0.35	0.20	0.18	0.15
60	LED	0.53	0.30	0.26	0.23
70	HPS	0.73	0.42	0.36	0.32
91	LED	0.80	0.46	0.40	0.35
100	HPS	1.04	0.60	0.52	0.45
150	HPS	1.56	0.90	0.78	0.68
152	LED	1.33	0.77	0.67	0.58
250	HPS	2.60	1.27	1.10	0.95

HPS @ 0.8 PF, LED @ 0.95 PF

NOTE:

FUSE SIZE = 2 X (NUMBER OF LIGHTS IN STRING) X (AMPS PER LIGHT).

a. ROUND TO NEAREST ALLOWED SIZE. CHOICE OF 3, 5, 7.5, 10, 20, & 30 AMPS.

B. ALL FUSES SHALL BE SLOW-BLOW.

No.	REVISIONS	DATE	BY	CK'D	APP'D
3	ADDED MORE WATTAGES	8/5/15	BE	TC	HZ
2	CHANGED 3A TO 5A FUSE	2/21/12	RT	EWF	
1	ADDED FUSE SIZE FORMULA	6/7/05	CW		

CITY OF LODI

ELECTRIC UTILITY DEPARTMENT

CONSTRUCTION STANDARD

STREETLIGHT WIRING

FUSING TABLE

DATE	DRAWN	DESIGNED	CHECKED	APPROVAL	REVISION
22JAN04	RT	HH	AMS		SHEET 6 OF 6 / REVISION 3

503 0101

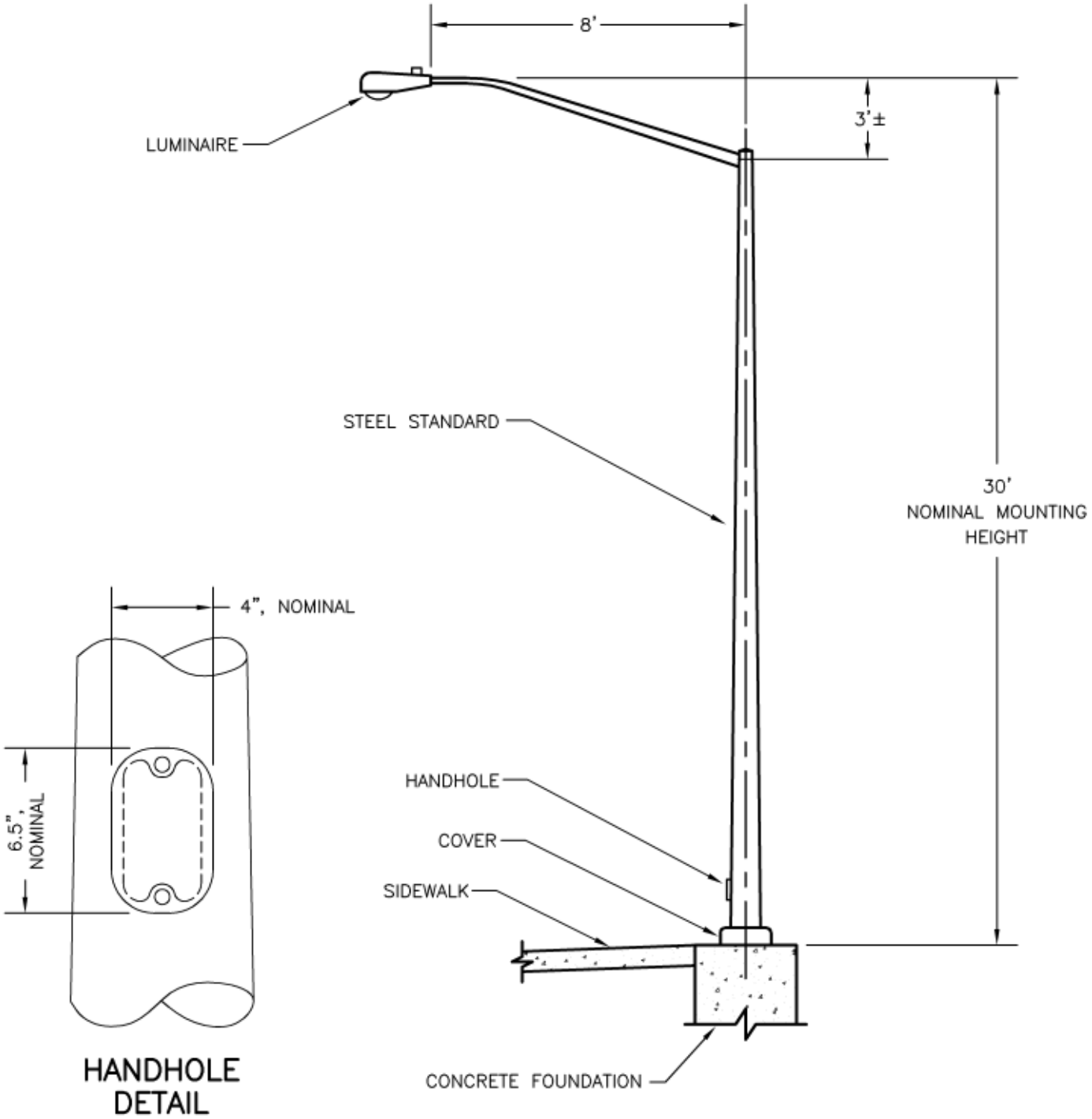

Drawing name: M:\DATA\CAD\Standards\STL\0504\0201-1.dwg Plotted on: Feb. 18, 2011 - 9:09am

No.	REVISIONS	DATE	BY	CK'D	APP'D
5	ABBREVIATION REVISION	6/15/04	CW	Ams	

CITY OF LODI
ELECTRIC UTILITY DEPARTMENT

CONSTRUCTION STANDARD

30' STEEL STREETLIGHT

DATE	DRAWN	DESIGNED	CHECKED	APPROVAL	SHEET 1 OF 8 / REVISION 5	504 0201
18SEP95	BA		Ams			

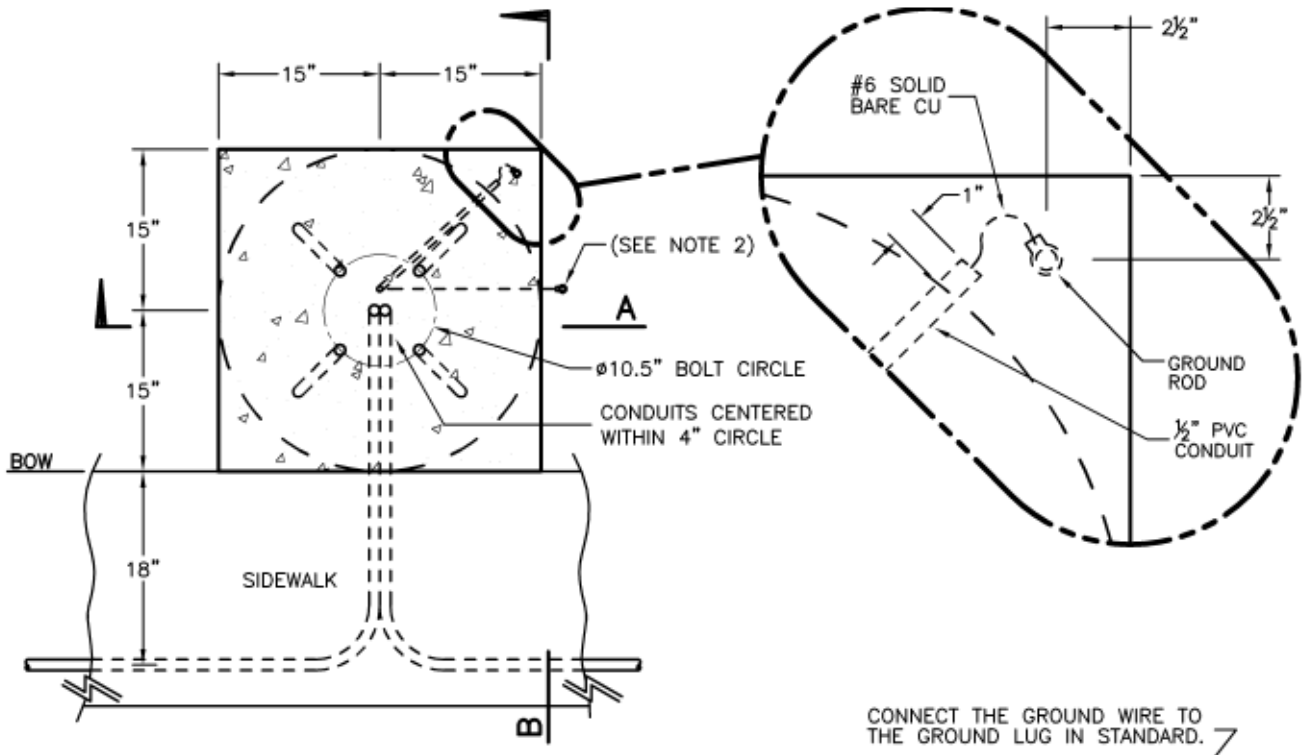

TOP VIEW

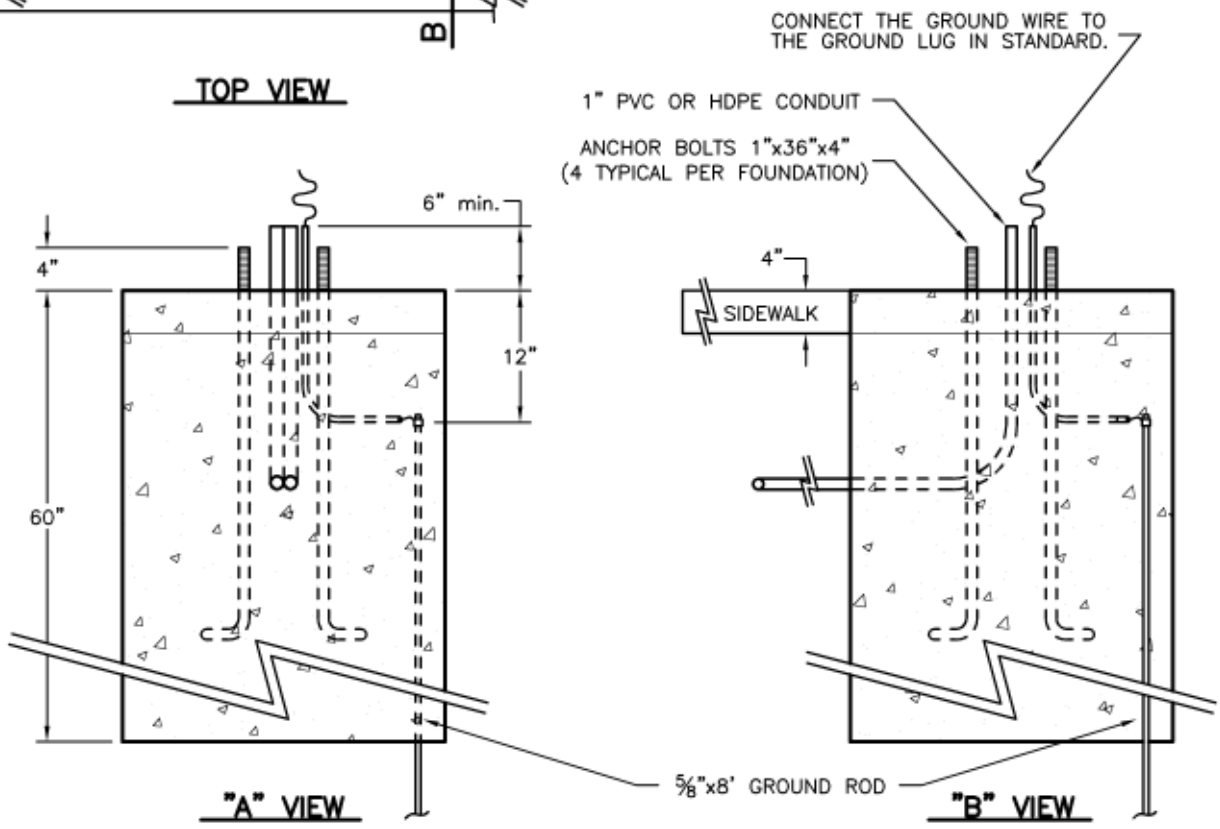

"A" VIEW

"B" VIEW

NOTES:

1. 25.5 CUBIC FEET OF CONCRETE REQUIRED.
2. ALTERNATE GROUND ROD LOCATION. SIDE OF FOUNDATION OPPOSITE THE PROPERTY LINE.

Drawing name: M:\DATA\CAD\Standards\STL\0504\0201-2.dwg Plotted on: Feb. 18, 2011 - 9:14am

No.	REVISIONS	DATE	BY	CK'D	APP'D
2	ADDED CONDUIT CIRCLE NOTE AND TYPE	7/25/05	CW		
1	ABBREVIATION REVISION	6/15/04	CW	AMS	

CITY OF LODI
ELECTRIC UTILITY DEPARTMENT

CONSTRUCTION STANDARD

30' STEEL STREETLIGHT
FOUNDATION DETAIL

DATE	DRAWN	DESIGNED	CHECKED	APPROVAL	SHEET 2 OF 8 / REVISION 2	504 0201
06FEB02	CW		AMS			

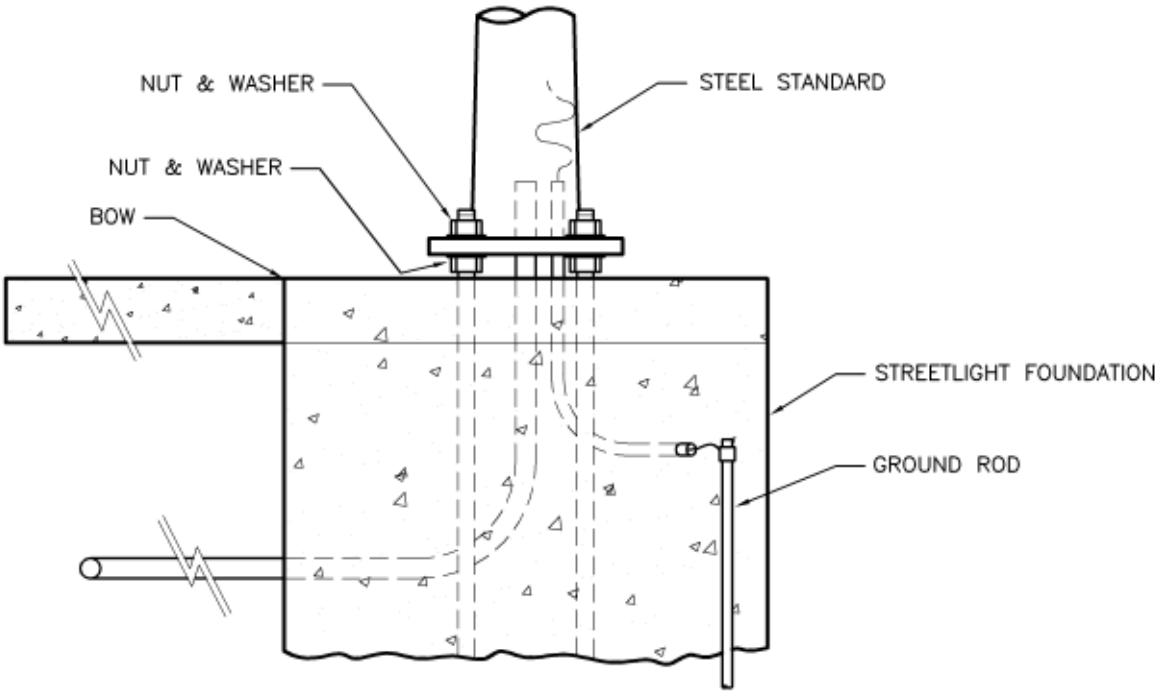

LEVELING DETAIL

NOTE:
FOUNDATION TO BE LEVEL AND FLUSH WITH BACK OF WALK. TOP OF FOUNDATION SHALL BE BROOM FINISHED AND ALL EXPOSED EDGES SHALL BE ROUNDED TO ½" RADIUS.

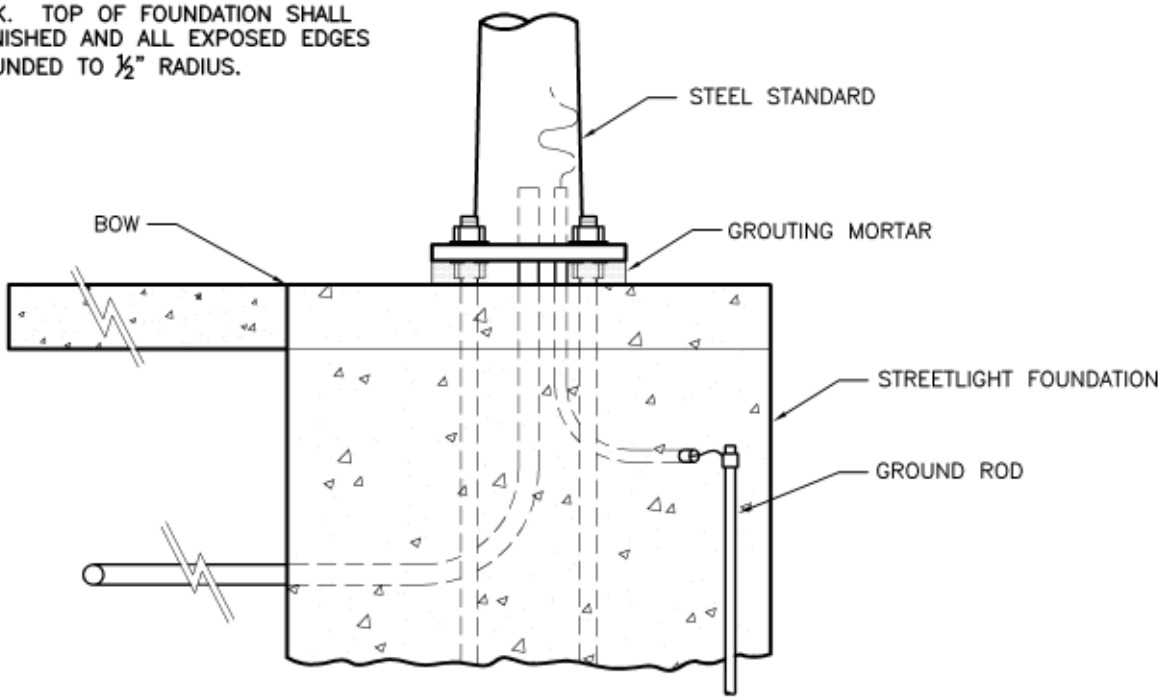

GROUTING DETAIL

Drawing name: M:\DATA\CAD\Standards\STL\0504\0201-3.dwg Plotted on: Feb. 18, 2011 - 9:15am

No.	REVISIONS	DATE	BY	CK'D	APP'D
5	ABBREVIATION REVISION	6/15/04	CW	Ams	

CITY OF LODI
ELECTRIC UTILITY DEPARTMENT

CONSTRUCTION STANDARD
30' STEEL STREETLIGHT
STANDARD INSTALLATION DETAIL

DATE	DRAWN	DESIGNED	CHECKED	APPROVAL		
18SEP95	BA		Ams		SHEET 3 OF 8	504 0201
					REVISION 5	

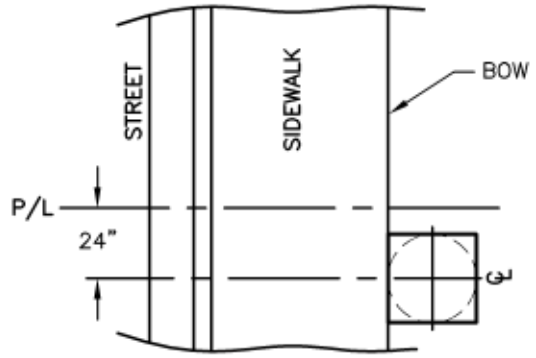

DETAIL 2

BEHIND SIDEWALK

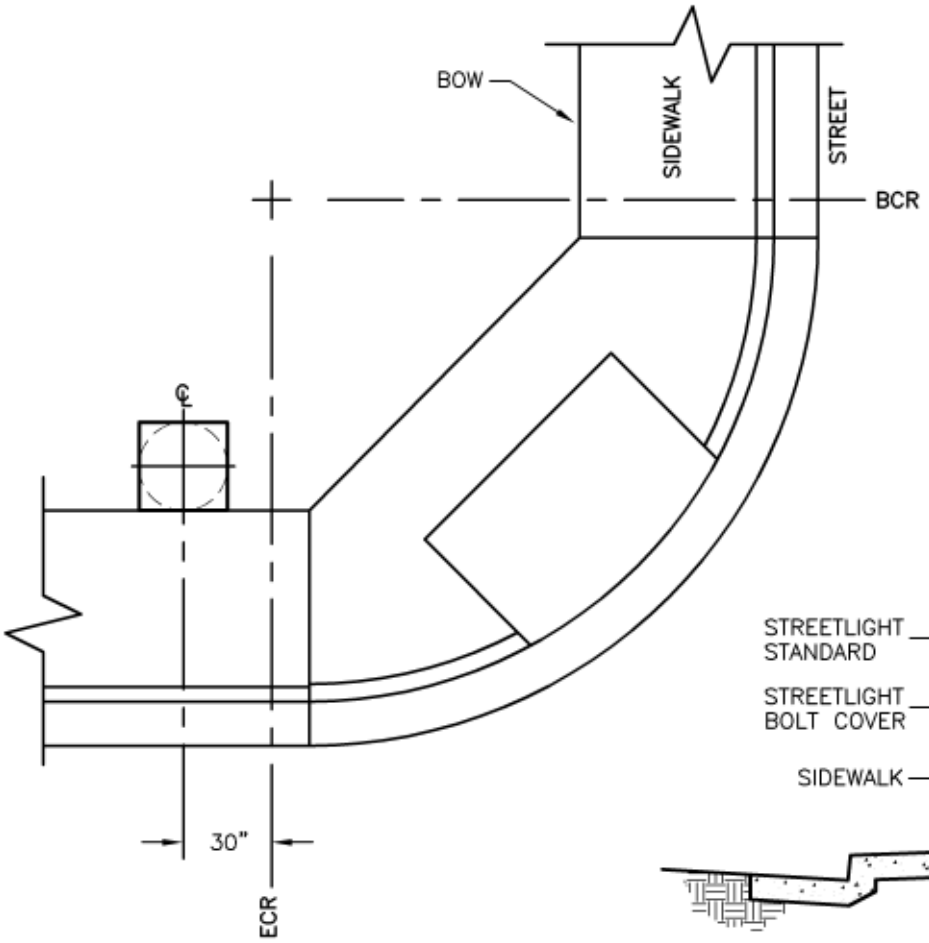

DETAIL 1

RADIUS INSTALLATION

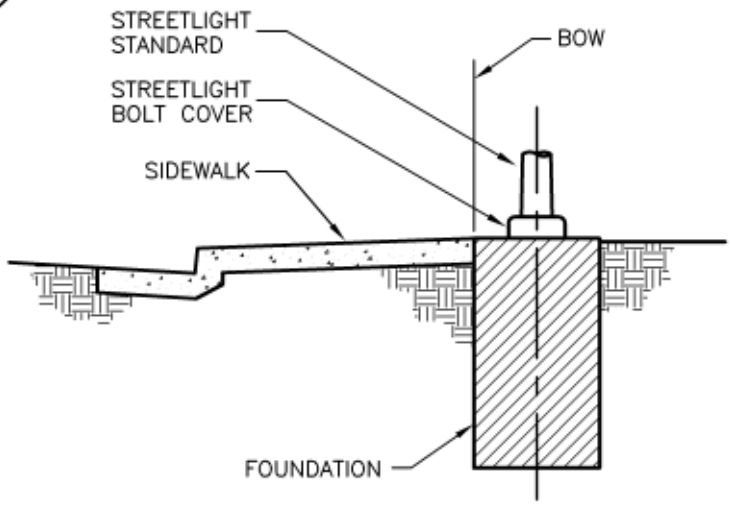

Drawing name: M:\DATA\CAD\Standards\STL\0504\0201-4.dwg Plotted on: Feb. 18, 2011 - 9:17am

No.	REVISIONS	DATE	BY	CK'D	APP'D
7	ABBREVIATION REVISION	6/15/04	CW	Ams	

CITY OF LODI
ELECTRIC UTILITY DEPARTMENT

CONSTRUCTION STANDARD

30' STEEL STREETLIGHT
LOCATION DETAIL

DATE	DRAWN	DESIGNED	CHECKED	APPROVAL		
19AUG96	BA		Ams		SHEET 4 OF 8	504 0201
					REVISION 7	

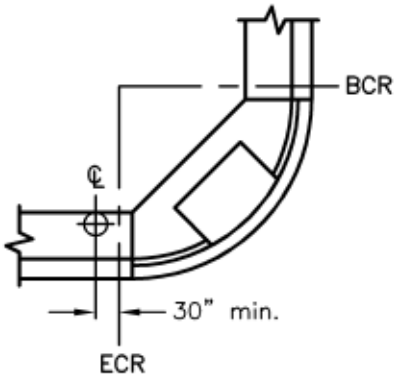

DETAIL

STANDARD OR JUNCTION BOX LOCATION ON RADIUS

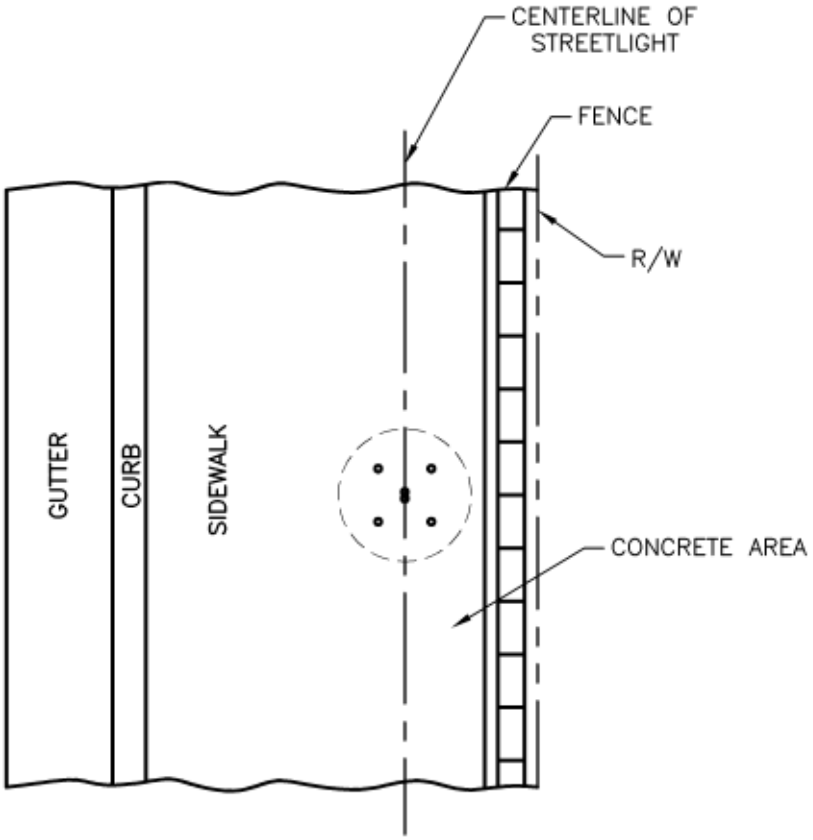

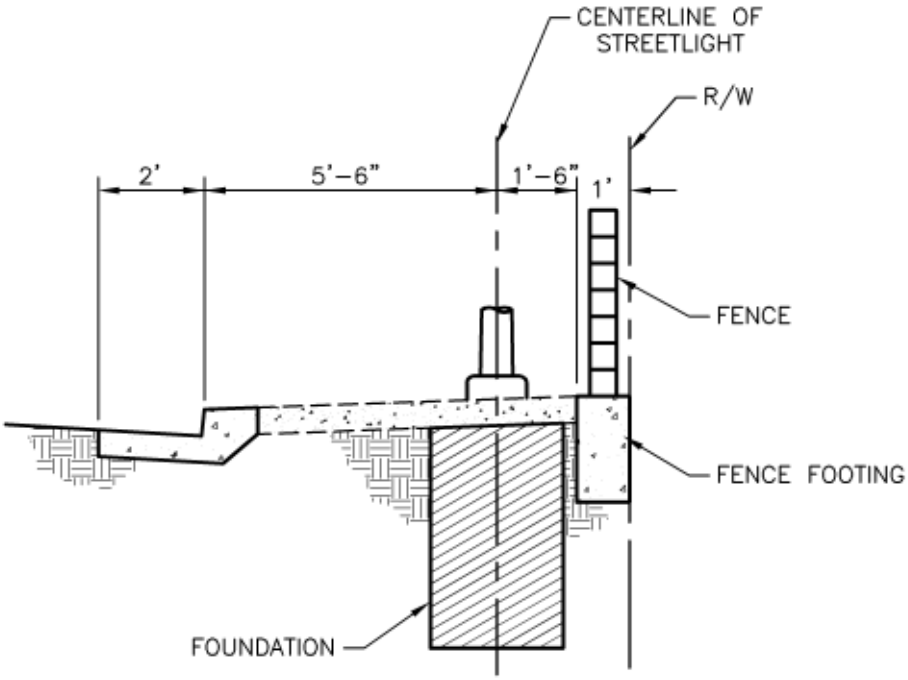

NOTE:

SIDEWALK AND STREETLIGHT CAP TO BE A MONOLITHIC POUR.

Drawing name: M:\DATA\CAD\Standards\STL\0504\0201-5.dwg Plotted on: Feb. 18, 2011 - 9:19am

No.	REVISIONS	DATE	BY	CK'D	APP'D
6	ABBREVIATION REVISION	6/15/04	CW	Ams	

CITY OF LODI
ELECTRIC UTILITY DEPARTMENT

CONSTRUCTION STANDARD

30' STEEL STREETLIGHT
LOCATION DETAIL w/ FENCE INSIDE R/W

DATE	DRAWN	DESIGNED	CHECKED	APPROVAL		
04OCT95	BA		Ams		SHEET 5 OF 8	504 0201
					REVISION 6	

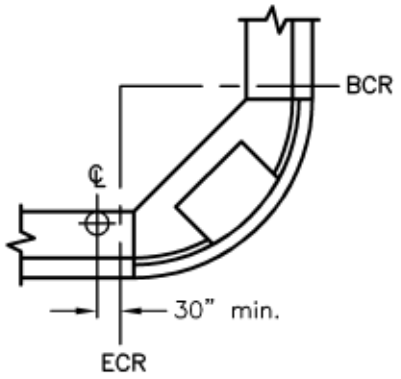

DETAIL

STANDARD OR JUNCTION BOX LOCATION ON RADIUS

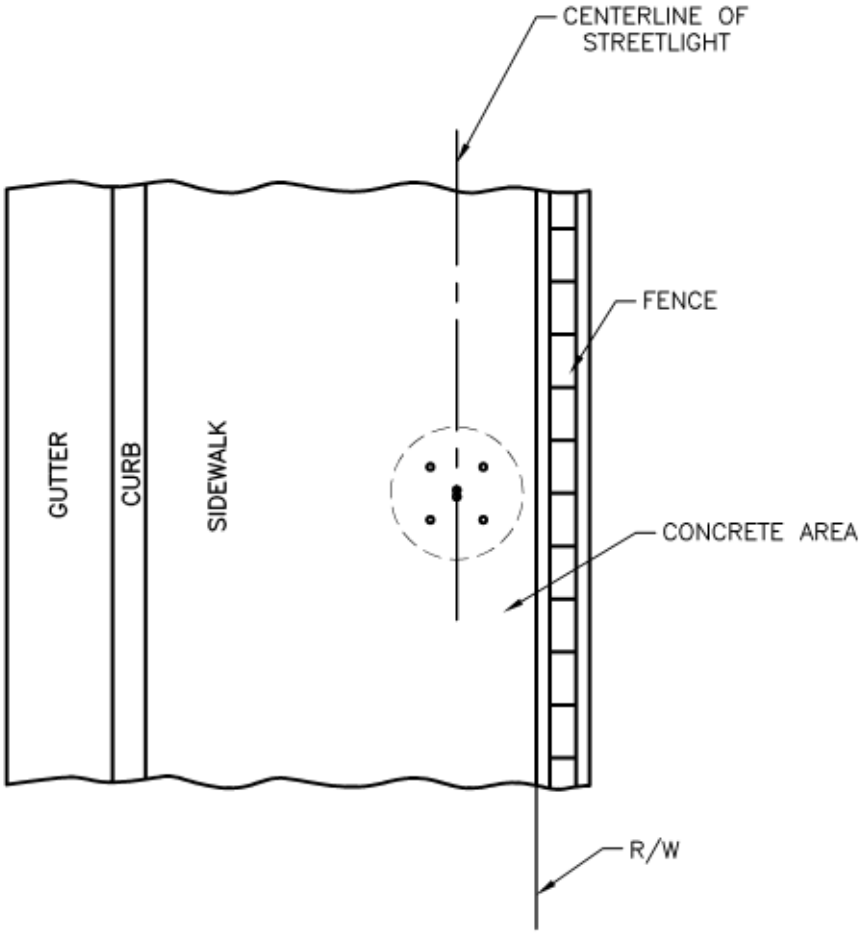

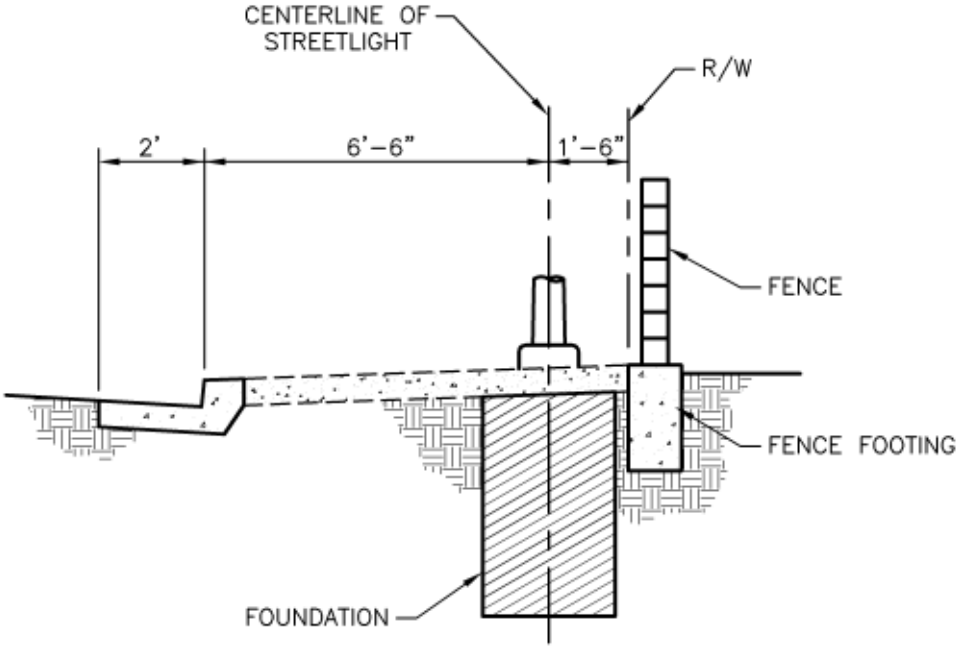

NOTE:

SIDEWALK AND STREETLIGHT CAP TO BE A MONOLITHIC POUR.

Drawing name: M:\DATA\CAD\Standards\STL\0504\0201-6.dwg Plotted on: Feb. 18, 2011 - 9:21am

No.	REVISIONS	DATE	BY	CK'D	APP'D
6	ABBREVIATION REVISION	6/15/04	CW	AMS	

CITY OF LODI
ELECTRIC UTILITY DEPARTMENT

CONSTRUCTION STANDARD

30' STEEL STREETLIGHT
LOCATION DETAIL w/ FENCE OUTSIDE R/W

DATE	DRAWN	DESIGNED	CHECKED	APPROVAL		
04OCT95	BA		AMS		SHEET 6 OF 8	504 0201
					REVISION 6	

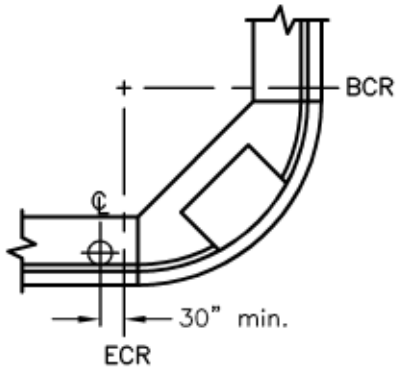

DETAIL

STANDARD OR JUNCTION
BOX LOCATION ON RADIUS

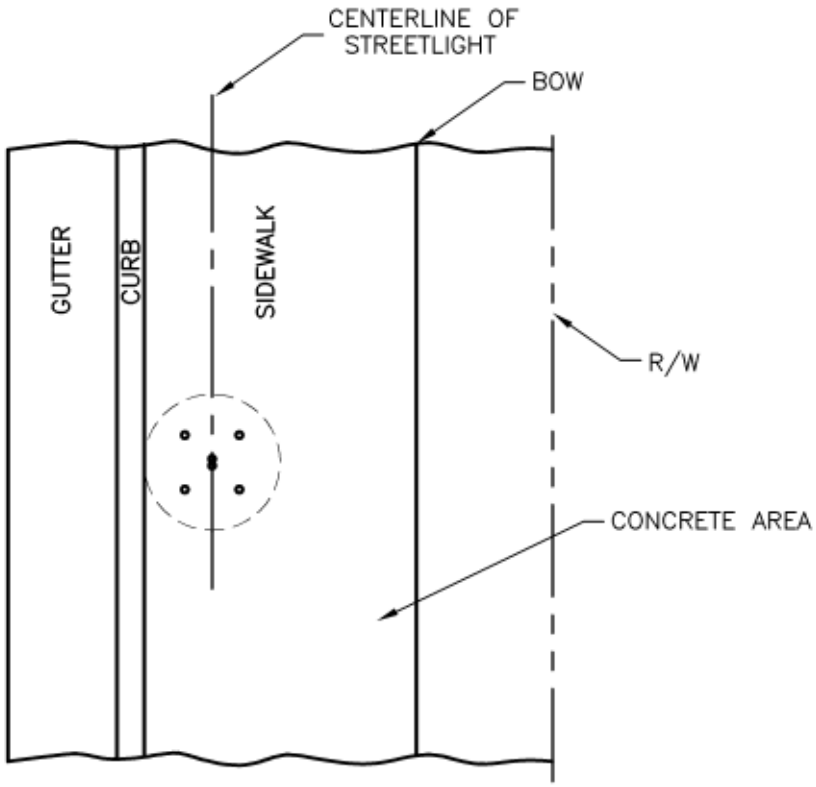

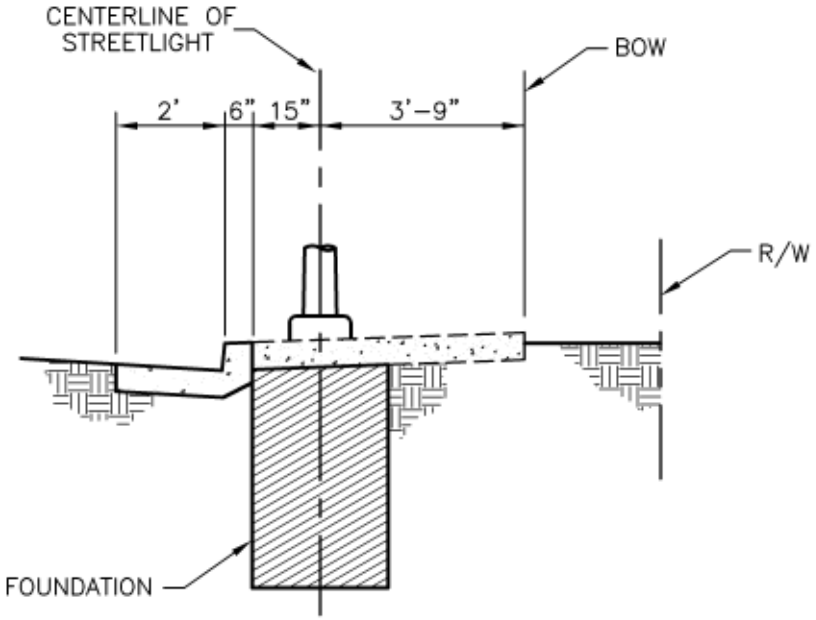

NOTE:

SIDEWALK AND STREETLIGHT CAP
TO BE A MONOLITHIC POUR.

Drawing name: M:\DATA\CAD\Standards\STL\0504\0201-7.dwg Plotted on: Feb. 18, 2011 - 9:24am

No.	REVISIONS	DATE	BY	CK'D	APP'D
6	ABBREVIATION REVISION	6/15/04	CW	Ams	

CITY OF LODI
ELECTRIC UTILITY DEPARTMENT

CONSTRUCTION STANDARD

30' STEEL STREETLIGHT
LOCATION DETAIL BACK OF CURB

DATE	DRAWN	DESIGNED	CHECKED	APPROVAL	SHEET 7 OF 8 / REVISION 6	504 0201
18SEP95	BA		Ams			

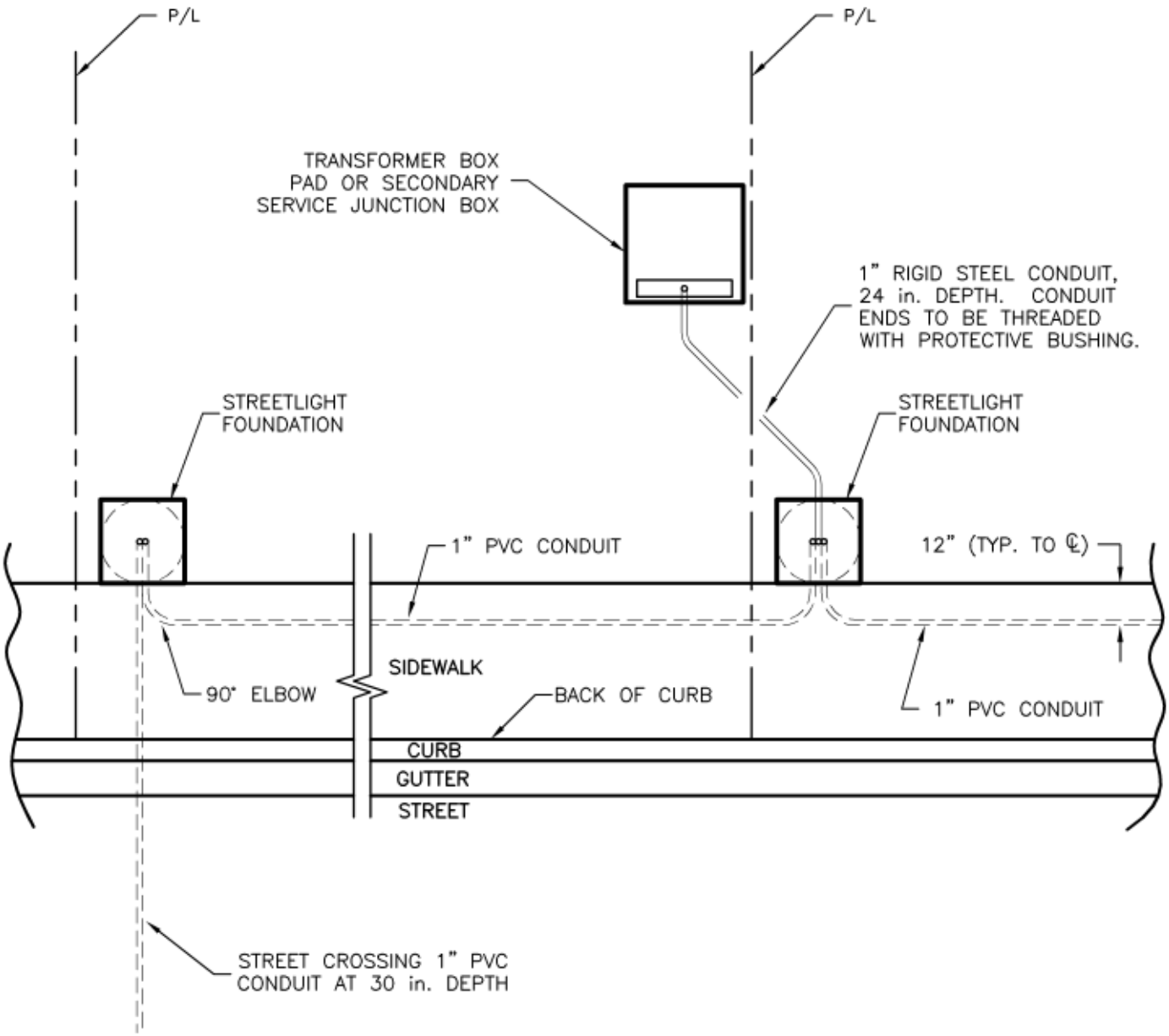

NOTES:

1. CONTRACTOR SHALL EXTEND CONDUIT INTO TRANSFORMER OR SECONDARY SERVICE JUNCTION BOX LOCATIONS PRIOR TO EQUIPMENT PLACEMENT. CONDUIT TO BE STRAPPED TO EXISTING CONDUIT STUBS.
2. SHOULD EQUIPMENT BE PLACED, CONTRACTOR SHALL CONTACT THE ELECTRIC UTILITY DEPARTMENT AT (209) 333-6817 FOR SPECIAL ARRANGEMENTS.

Drawing name: M:\DATA\CAD\Standards\STL\0504\0201-8.dwg Plotted on: Feb. 18, 2011 - 9:26am

No.	REVISIONS	DATE	BY	CK'D	APP'D
3	ABBREVIATION REVISION	6/15/04	CW	Ams	

CITY OF LODI
ELECTRIC UTILITY DEPARTMENT

CONSTRUCTION STANDARD

30' STEEL STREETLIGHT
FRONT PROPERTY DETAIL

DATE	DRAWN	DESIGNED	CHECKED	APPROVAL	SHEET 8 OF 8 / REVISION 3	504 0201
03FEB02	CW		Ams			

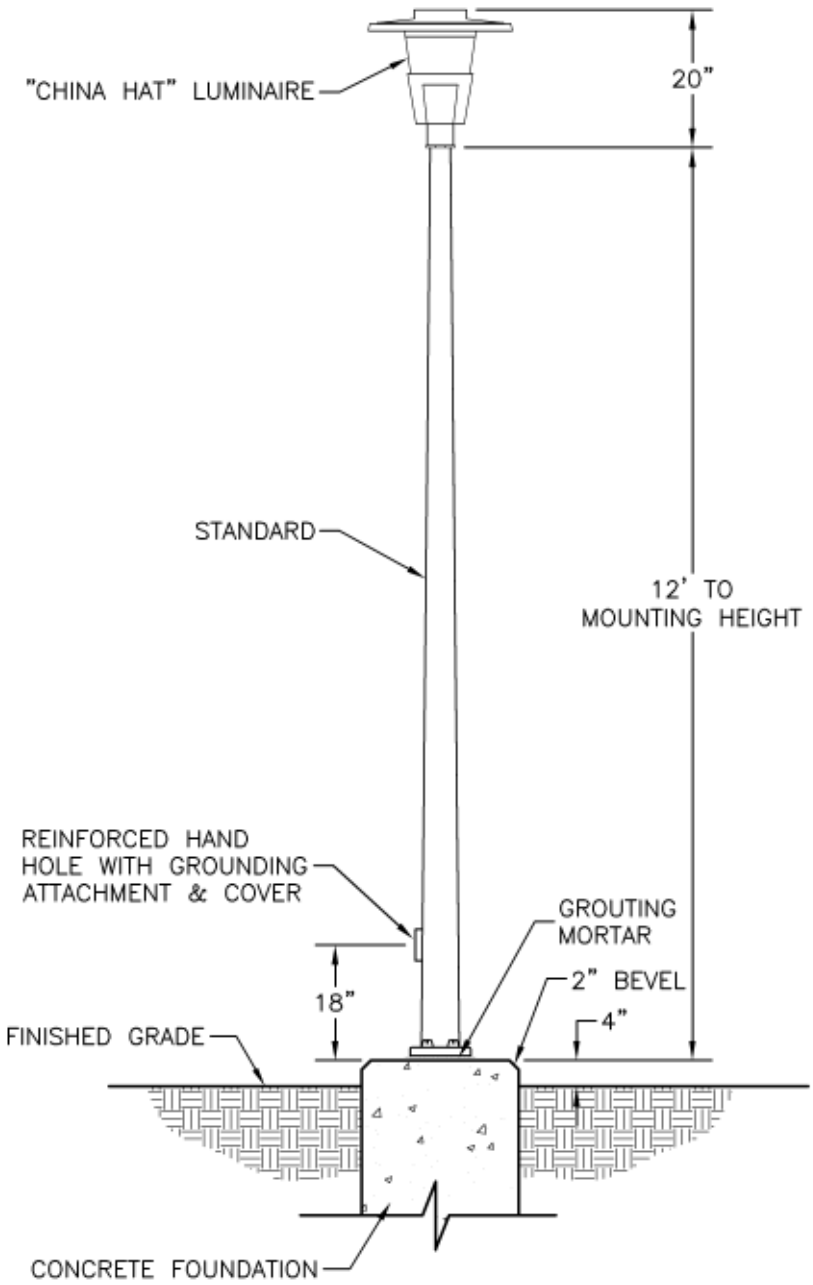

PARTS LIST	
STANDARD	151–7162
CHINA HAT LUMINAIRE	151–2595
70 WATT BULB	151–0170
PHOTO CELL	151–6085

Drawing name: M:\DATA\CAD\Standards\STL\0505\0200-1.dwg Plotted on: Feb. 18, 2011 - 10:18am

CITY OF LODI
ELECTRIC UTILITY DEPARTMENT

CONSTRUCTION STANDARD

12' PARKING LOT & SUBSTATION STANDARD

05/09/07	RT	EWF		1-19-11	SHEET 1 OF 3	505 0200
DATE	DRAWN	DESIGNED	CHECKED	APPROVAL	REVISION	

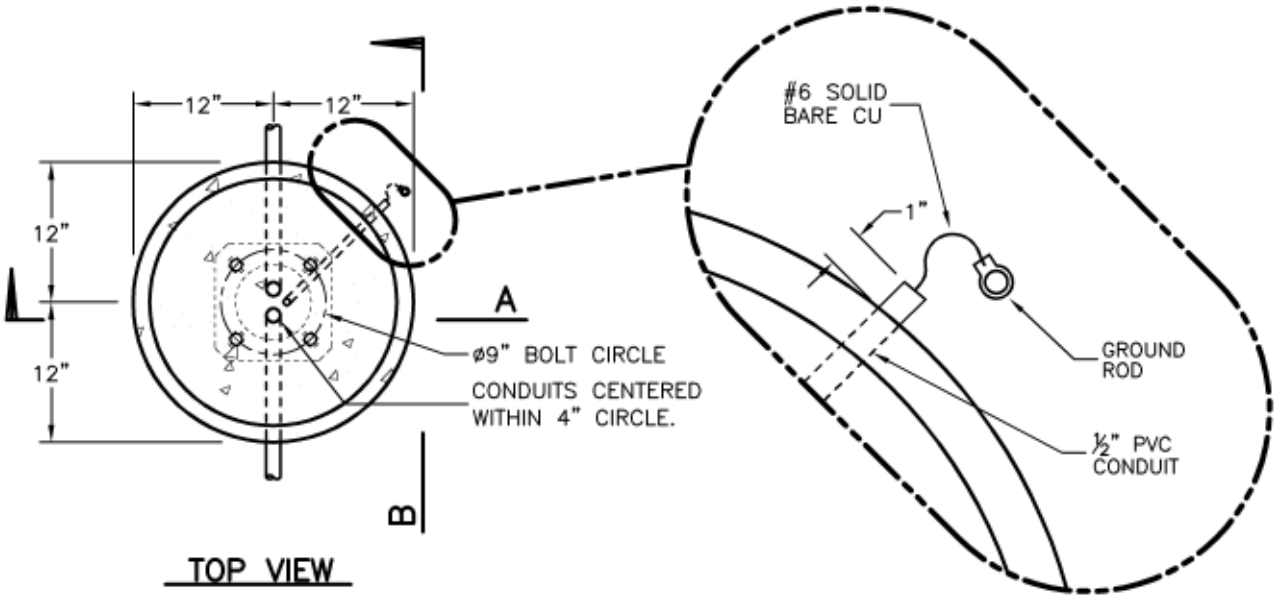

TOP VIEW

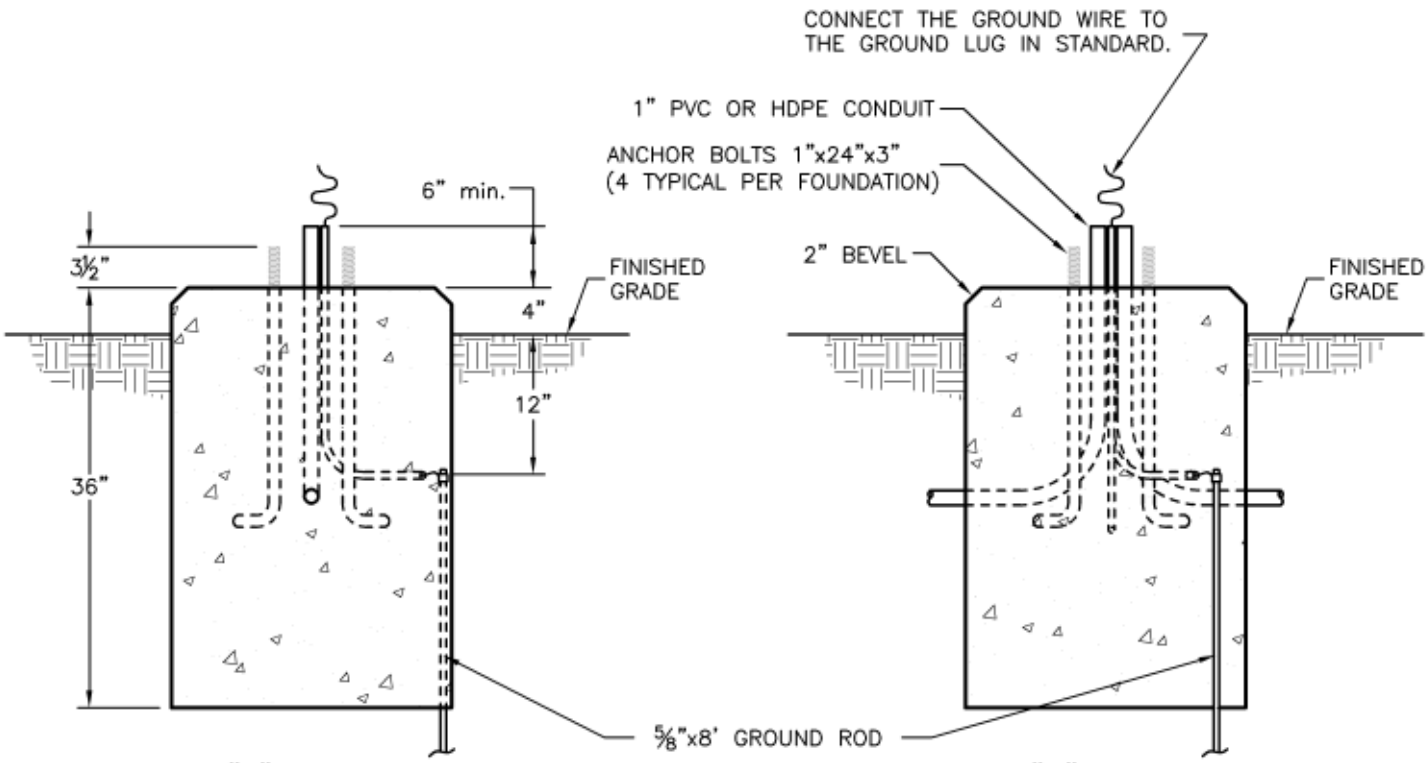

"A" VIEW

"B" VIEW

NOTE:

10.5 CUBIC FEET OF CONCRETE REQUIRED.

Drawing name: M:\DATA\CAD\Standards\STL\0505\0200-2.dwg Plotted on: Feb. 18, 2011 - 10:16am

CITY OF LODI ELECTRIC UTILITY DEPARTMENT				CONSTRUCTION STANDARD 12' PARKING LOT & SUBSTATION STANDARD FOUNDATION DETAIL		
05/09/07	RT	EWF		07-03-07	SHEET 2 OF 3	505 0200
DATE	DRAWN	DESIGNED	CHECKED	APPROVAL	REVISION	

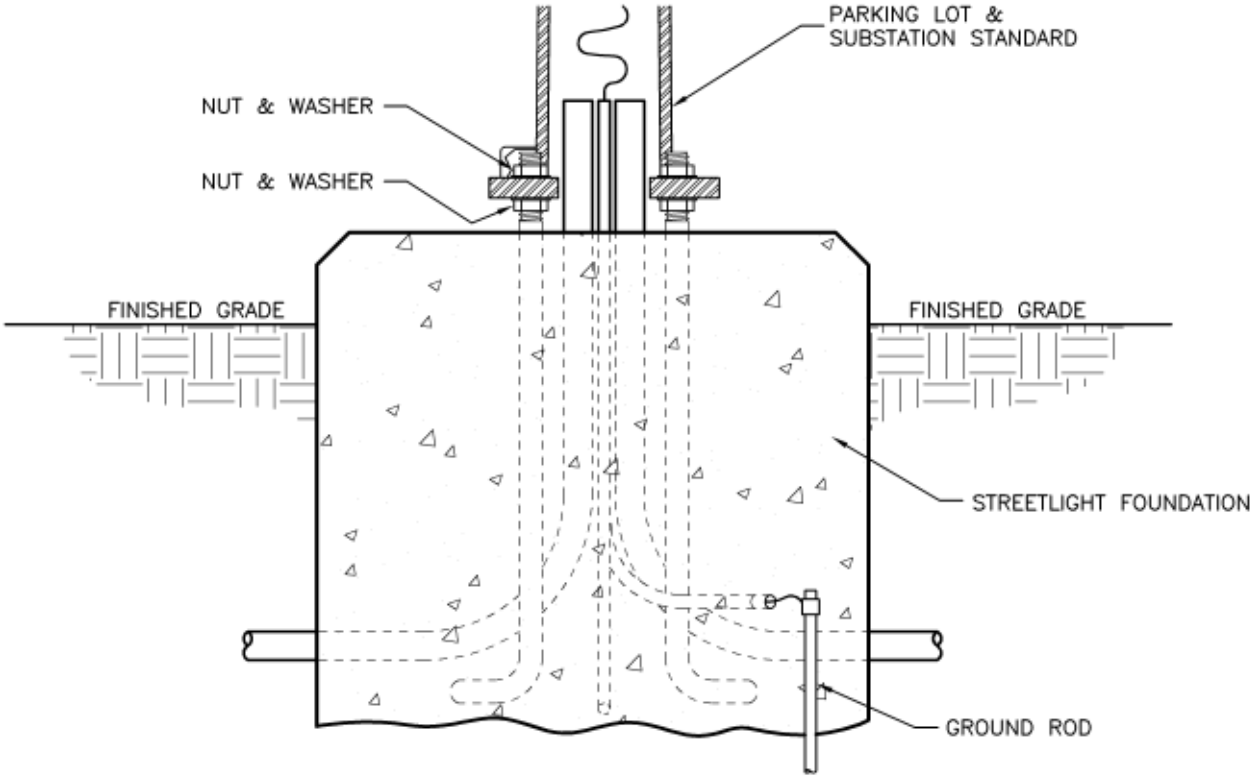

LEVELING DETAIL

NOTE:
TOP OF FOUNDATION SHALL BE BE 4" ABOVE FINISHED GRADE AND HAVE A BROOM FINISH. ALL EXPOSED EDGES SHALL HAVE A 2" BEVEL.

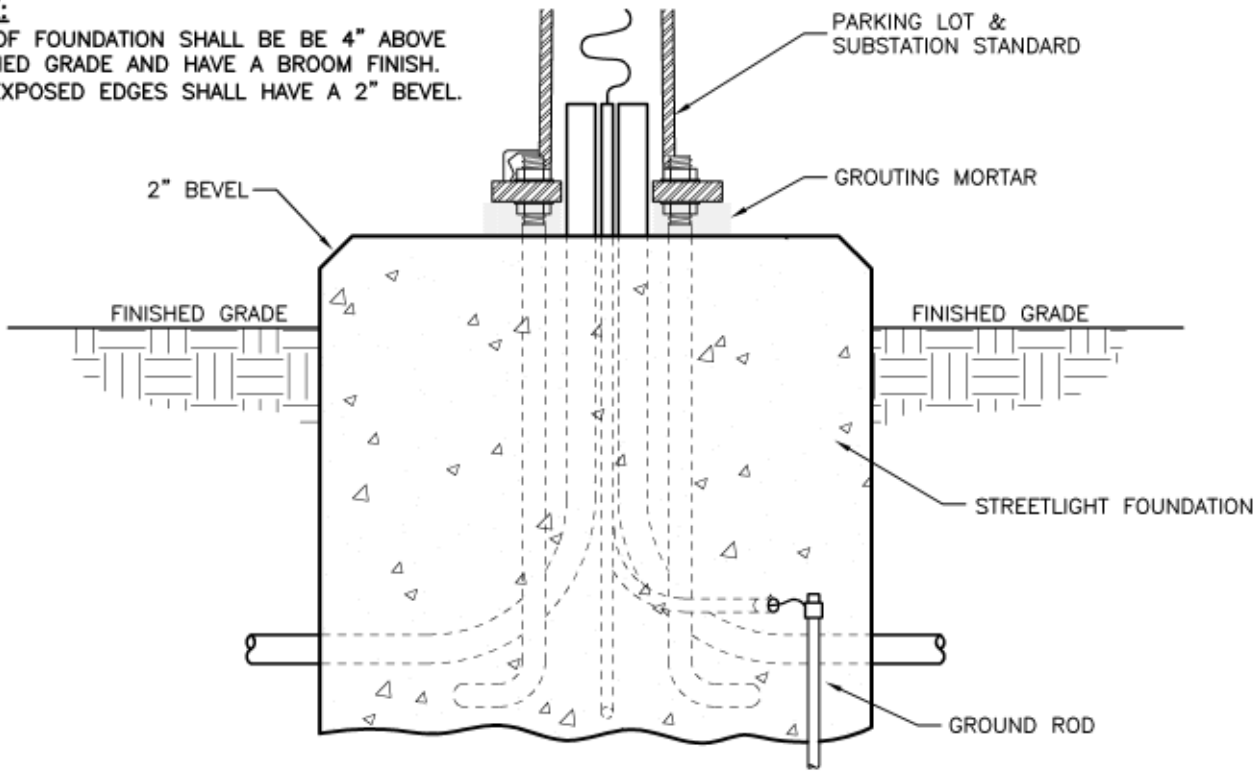

GROUTING DETAIL

Drawing name: M:\DATA\CAD\Standards\STL\0505\0200-3.dwg Plotted on: Feb. 18, 2011 - 10:14am

CITY OF LODI
ELECTRIC UTILITY DEPARTMENT

CONSTRUCTION STANDARD

12' PARKING LOT & SUBSTATION STANDARD
INSTALLATION DETAIL

05/09/07	RT	EWF		07-03-07	SHEET 3 OF 3	505 0200
DATE	DRAWN	DESIGNED	CHECKED	APPROVAL	REVISION	

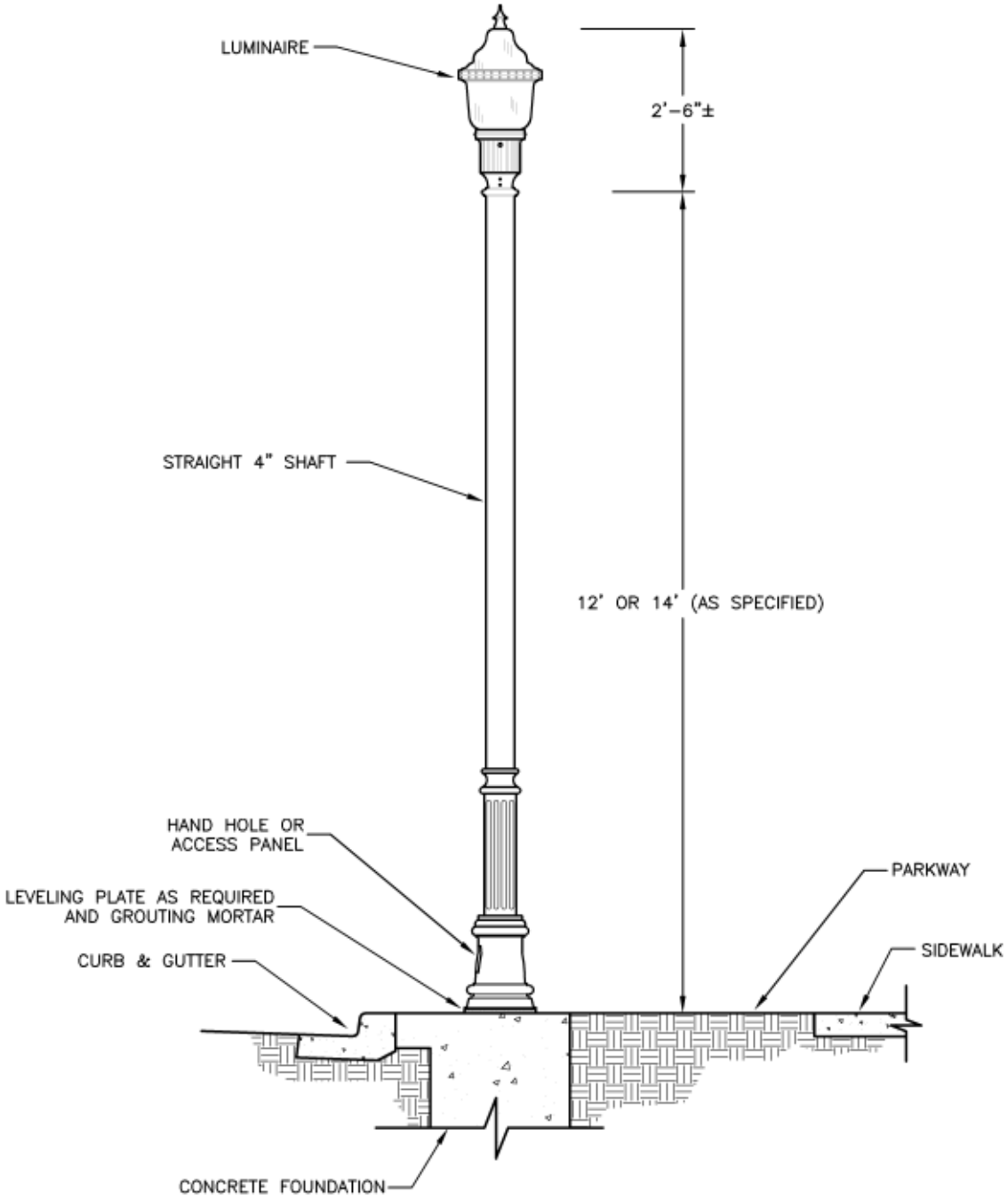

Drawing name: M:\DATA\CAD\Standards\STL\0505\0201-1.dwg Plotted on: Feb. 18, 2011 - 10:14am

No.	REVISIONS	DATE	BY	CK'D	APP'D
5	REVISED LEVELING PLATE & HAND HOLE	6/7/05	CW		
4	ABBREVIATION REVISION	6/15/04	CW	AMS	

CITY OF LODI
ELECTRIC UTILITY DEPARTMENT

CONSTRUCTION STANDARD

12' OR 14' DECORATIVE STREETLIGHT

DATE	DRAWN	DESIGNED	CHECKED	APPROVAL		
18APR01	CW		AMS		SHEET 1 OF 5	505 0201
					REVISION 5	

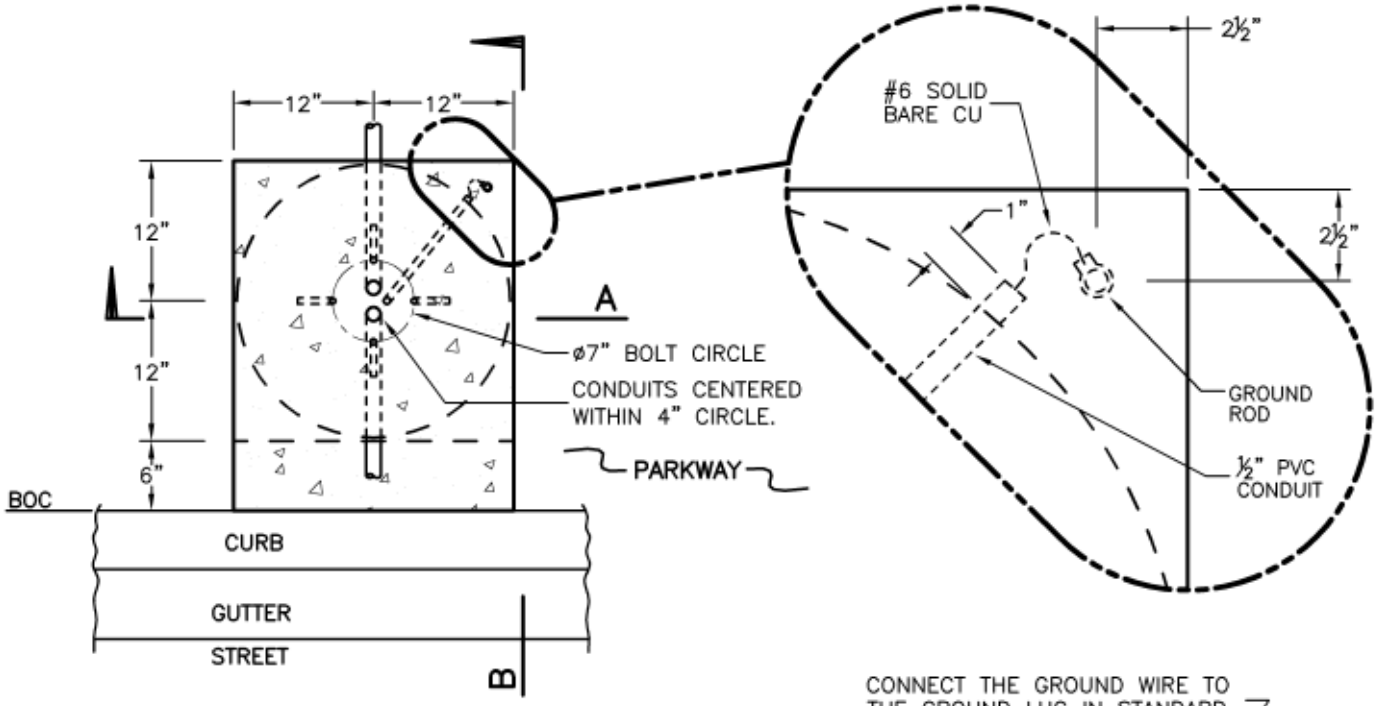

TOP VIEW

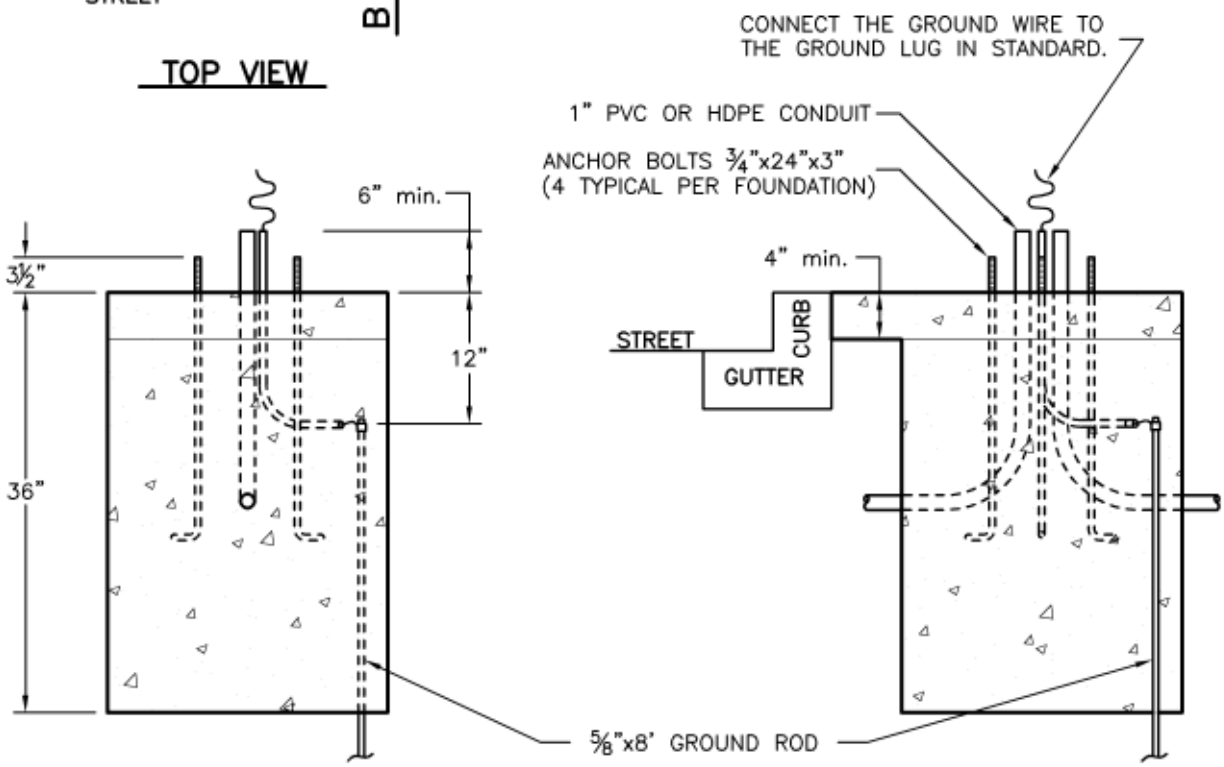

"A" VIEW

"B" VIEW

NOTE:

10.5 CUBIC FEET OF CONCRETE REQUIRED.

Drawing name: M:\DATA\CAD\Standards\STL\0505\0201-2.dwg Plotted on: Feb. 18, 2011 - 10:13am

No.	REVISIONS	DATE	BY	CK'D	APP'D
4	ADDED CONDUIT CIRCLE NOTE AND TYPE	6/7/05	CW		
3	ABBREVIATION REVISION	6/15/04	CW	AMS	

CITY OF LODI

ELECTRIC UTILITY DEPARTMENT

CONSTRUCTION STANDARD

12' OR 14' DECORATIVE STREETLIGHT FOUNDATION DETAIL

DATE	DRAWN	DESIGNED	CHECKED	APPROVAL	SHEET 2 OF 5 / REVISION 4	505 0201
18APR01	CW		AMS			

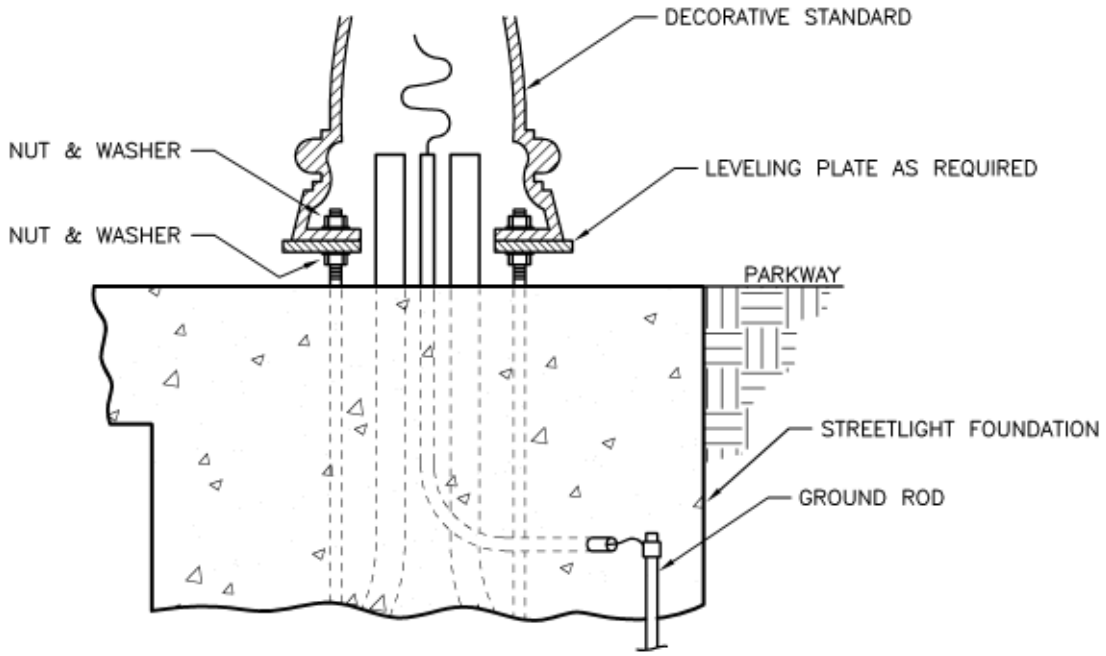

LEVELING DETAIL

NOTE:
FOUNDATION TO BE LEVEL AND FLUSH WITH BACK OF CURB. TOP OF FOUNDATION SHALL BE BROOM FINISHED AND ALL EXPOSED EDGES SHALL BE ROUNDED TO ½" RADIUS.

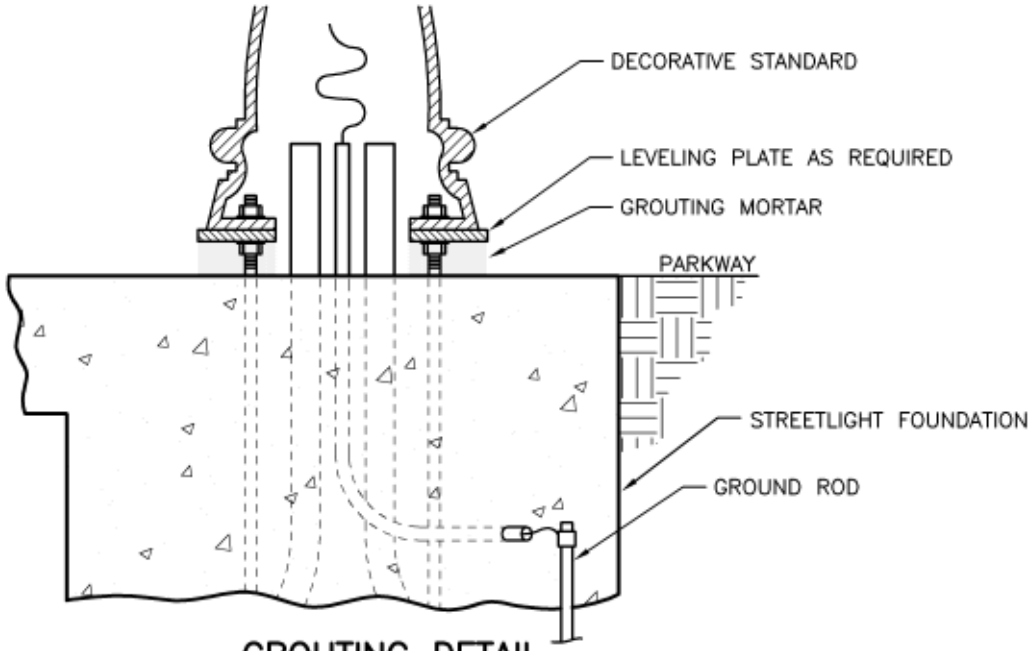

GROUTING DETAIL

Drawing name: M:\DATA\CAD\Standards\STL\0505\0201-3.dwg Plotted on: Feb. 18, 2011 - 10:12am

No.	REVISIONS	DATE	BY	CK'D	APP'D
4	REVISED LEVELING PLATE NOTE		CW		
3	ABBREVIATION REVISION		CW	AMS	

CITY OF LODI
ELECTRIC UTILITY DEPARTMENT

CONSTRUCTION STANDARD

12' OR 14 DECORATIVE STREETLIGHT
STANDARD INSTALLATION DETAIL

DATE	DRAWN	DESIGNED	CHECKED	APPROVAL		
19NOV01	CW		AMS		SHEET 3 OF 5	505 0201
					REVISION 4	

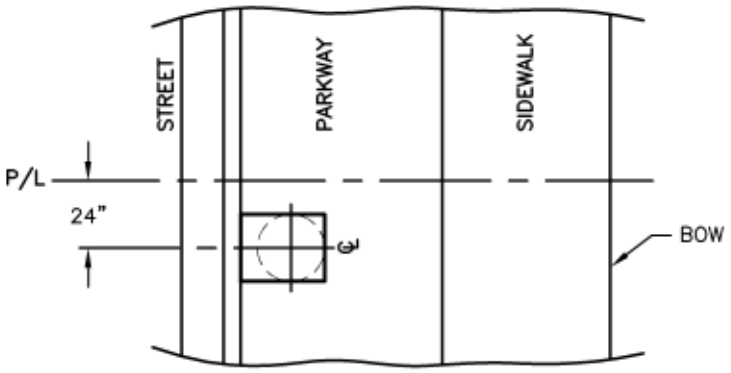

DETAIL 2

BEHIND CURB

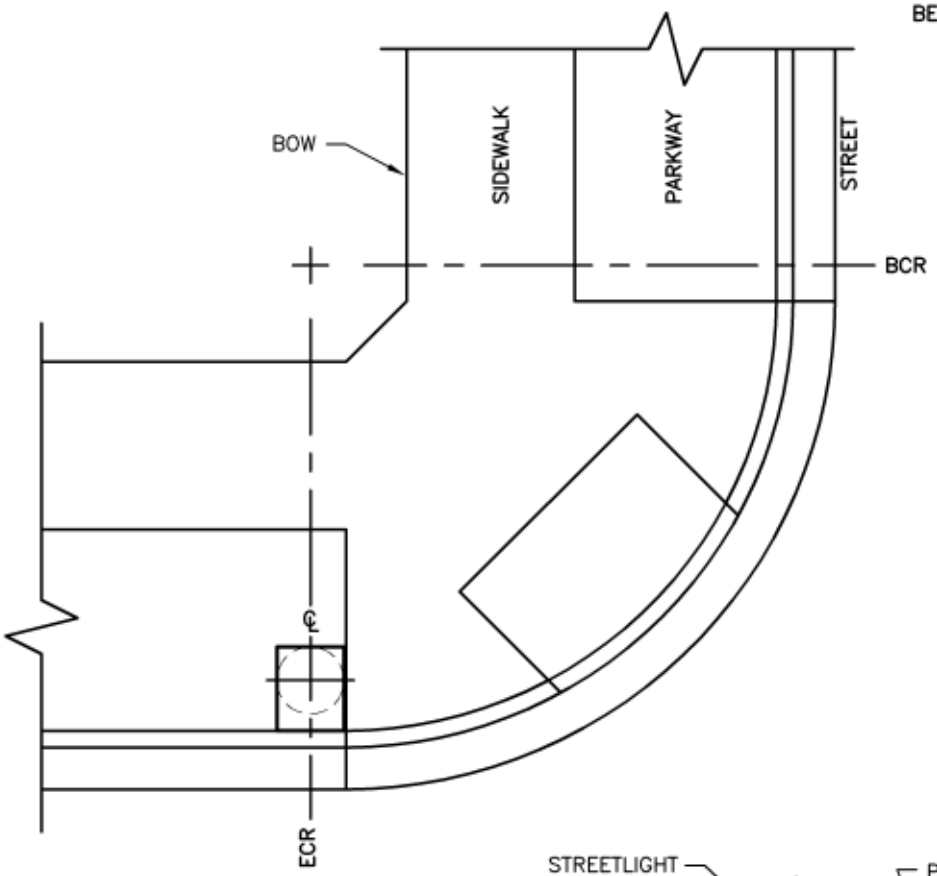

DETAIL 1

RADIUS INSTALLATION

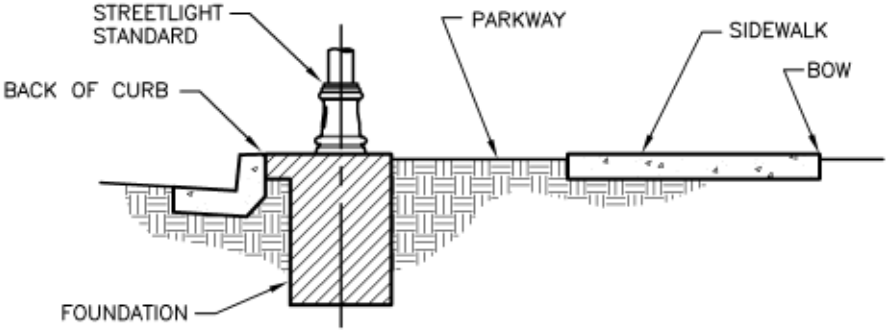

Drawing name: M:\DATA\CAD\Standards\STL\0505\0201-4.dwg Plotted on: Feb. 18, 2011 - 10:11am

No.	REVISIONS	DATE	BY	CK'D	APP'D
3	ABBREVIATION REVISION	6/15/04	CW	AMS	

CITY OF LODI

ELECTRIC UTILITY DEPARTMENT

CONSTRUCTION STANDARD

12' OR 14' DECORATIVE STREETLIGHT LOCATION DETAIL

DATE	DRAWN	DESIGNED	CHECKED	APPROVAL		
18APR01	CW		AMS		SHEET 4 OF 5	505 0201
					REVISION 3	

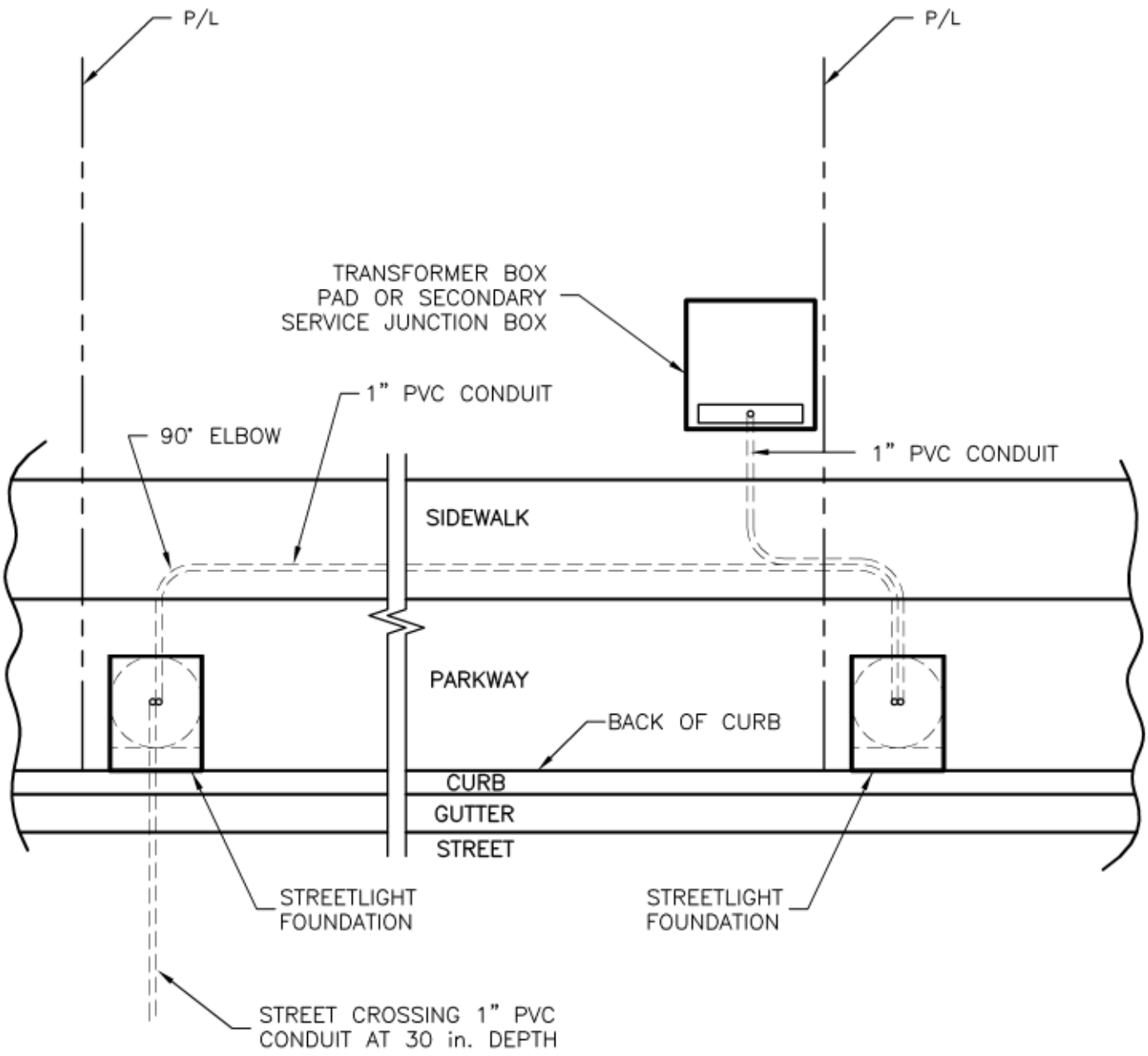

NOTES:

1. CONTRACTOR SHALL EXTEND CONDUIT INTO TRANSFORMER OR SECONDARY SERVICE JUNCTION BOX LOCATIONS PRIOR TO EQUIPMENT PLACEMENT. CONDUIT TO BE STRAPPED TO EXISTING CONDUIT STUBS.

2. SHOULD EQUIPMENT BE PLACED, CONTRACTOR SHALL CONTACT THE ELECTRIC UTILITY DEPARTMENT AT (209) 333-6817 FOR SPECIAL ARRANGEMENTS.

Drawing name: M:\DATA\CAD\Standards\STL\0505\0201-5.dwg Plotted on: Feb. 18, 2011 - 10:19am

No.	REVISIONS	DATE	BY	CK'D	APP'D
3	ABBREVIATION REVISION	6/15/04	CW	AMS	

CITY OF LODI
ELECTRIC UTILITY DEPARTMENT

CONSTRUCTION STANDARD

12' OR 14' DECORATIVE STREETLIGHT
FRONT PROPERTY DETAIL

DATE	DRAWN	DESIGNED	CHECKED	APPROVAL	SHEET 5 OF 5 / REVISION 3	505 0201
18APR01	CW		AMS			

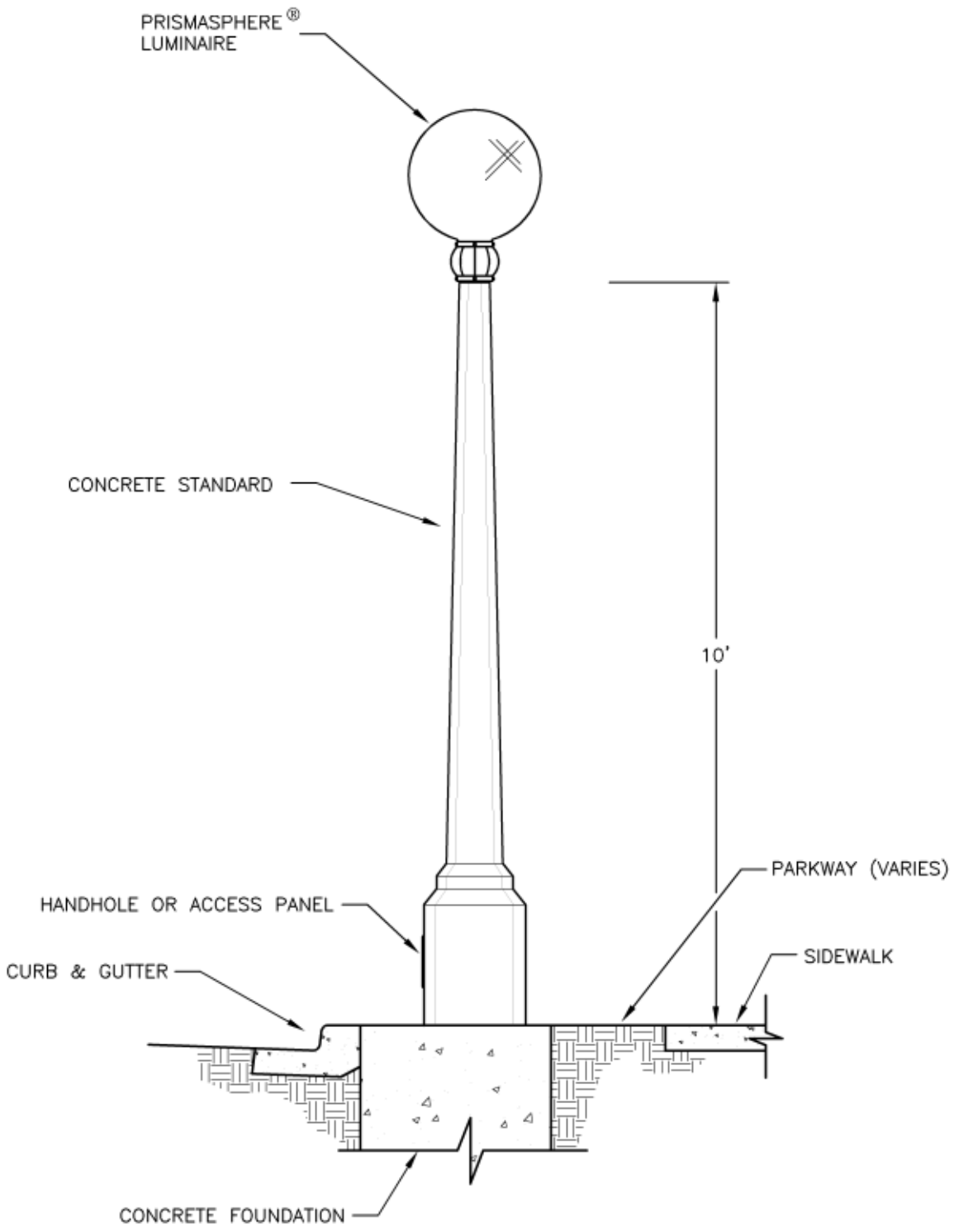

Drawing name: M:\DATA\CAD\Standards\STL\0507\0201-1.dwg Plotted on: Feb. 18, 2011 - 10:24am

No.	REVISIONS	DATE	BY	CK'D	APP'D
2	ADD ACCESS PANEL NOTE	6/7/05	CW		
1	ABBREVIATION REVISION	6/15/04	CW	AMS	

CITY OF LODI
ELECTRIC UTILITY DEPARTMENT

CONSTRUCTION STANDARD

10' CONCRETE STREETLIGHT

DATE	DRAWN	DESIGNED	CHECKED	APPROVAL		
20APR01	CW		AMS		SHEET 1 OF 3	507 0201
					REVISION 2	

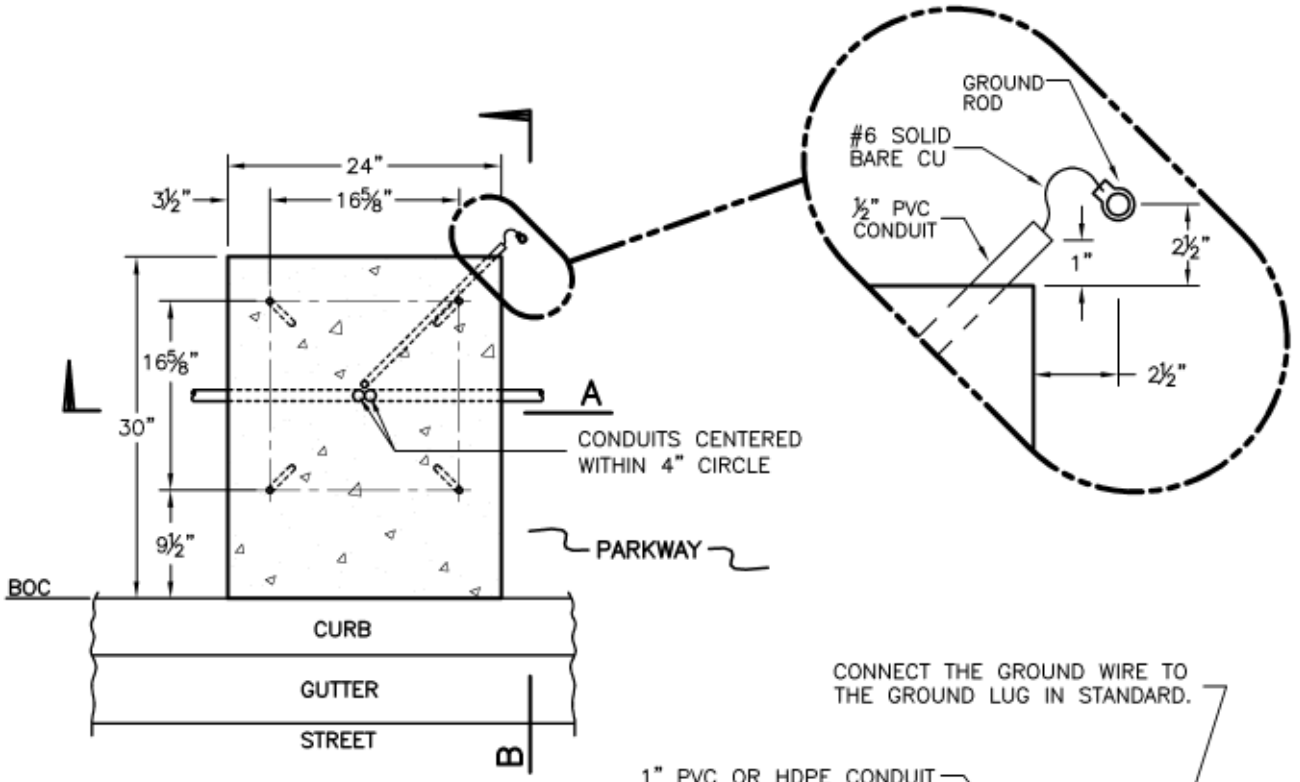

TOP VIEW

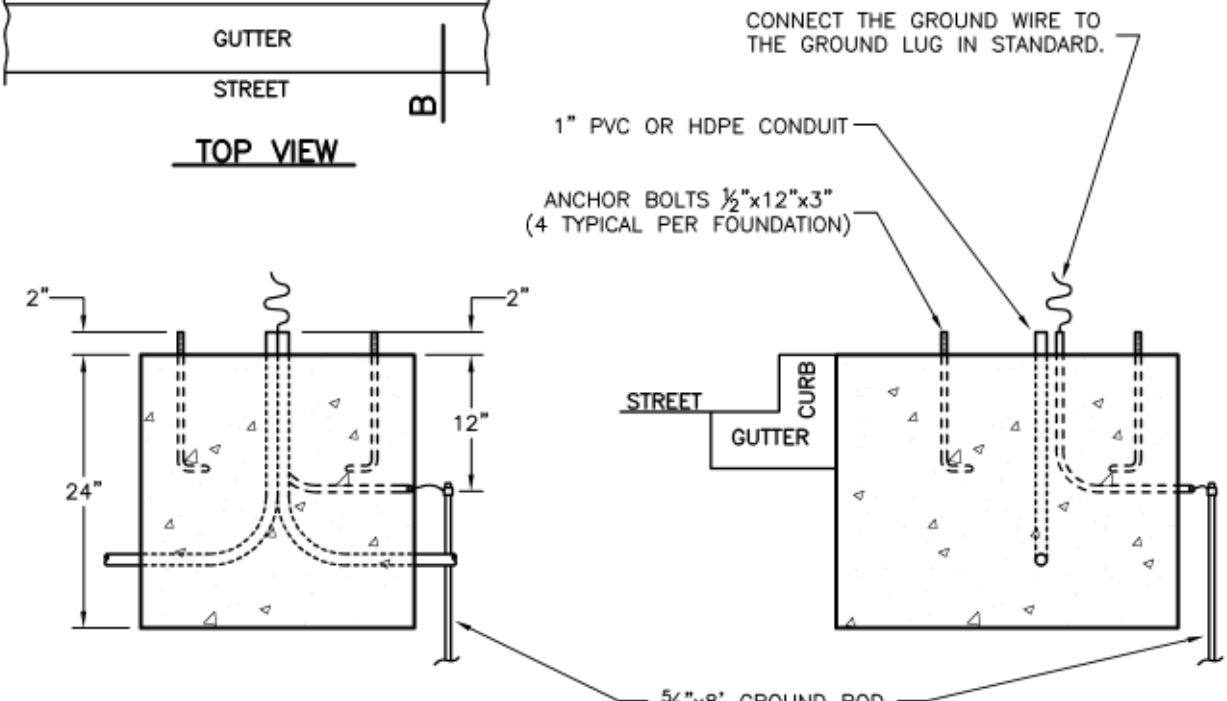

"A" VIEW

"B" VIEW

NOTE:
10 CUBIC FEET OF CONCRETE REQUIRED.

Drawing name: M:\DATA\CAD\Standards\STL\0507\0201-2.dwg Plotted on: Feb. 18, 2011 - 10:24am

No.	REVISIONS	DATE	BY	CK'D	APP'D
3	BOLT LOCATIONS REVISED	4/17/07	RT		
2	ADDED CONDUIT CIRCLE NOTE AND TYPE	6/7/05	CW		6/7/05
1	ABBREVIATION REVISION	6/15/04	CW	AMS	

CITY OF LODI
ELECTRIC UTILITY DEPARTMENT

CONSTRUCTION STANDARD

10' CONCRETE STREETLIGHT FOUNDATION DETAIL

DATE	DRAWN	DESIGNED	CHECKED	APPROVAL	SHEET 2 OF 3 / REVISION 3	507 0201
06FEB02	CW	AMS	AMS			

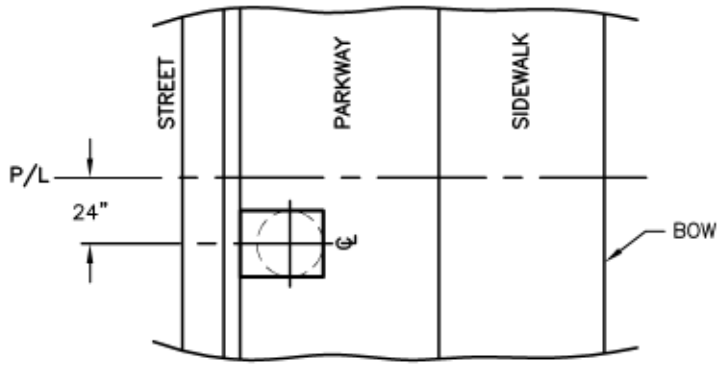

DETAIL 2

BEHIND CURB

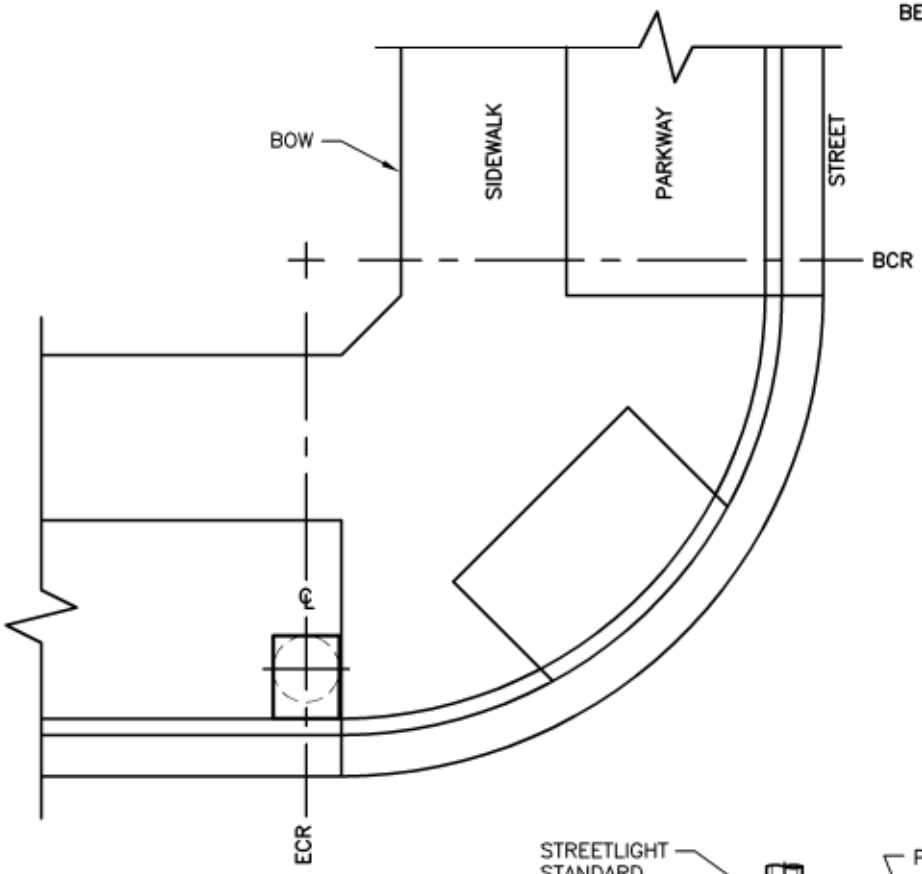

DETAIL 1

RADIUS INSTALLATION

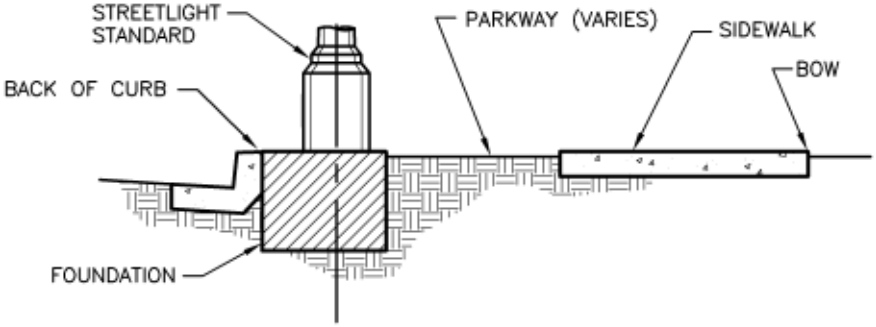

Drawing name: M:\DATA\CAD\Standards\STL\0507\0201-3.dwg Plotted on: Feb. 18, 2011 - 10:25am

No.	REVISIONS	DATE	BY	CK'D	APP'D
1	ABBREVIATION REVISION	6/15/04	CW	AMS	

CITY OF LODI
ELECTRIC UTILITY DEPARTMENT

CONSTRUCTION STANDARD

10' CONCRETE STREETLIGHT LOCATION DETAIL

DATE	DRAWN	DESIGNED	CHECKED	APPROVAL		
17APR02	CW		AMS		SHEET 3 OF 3	507 0201
					REVISION 1	

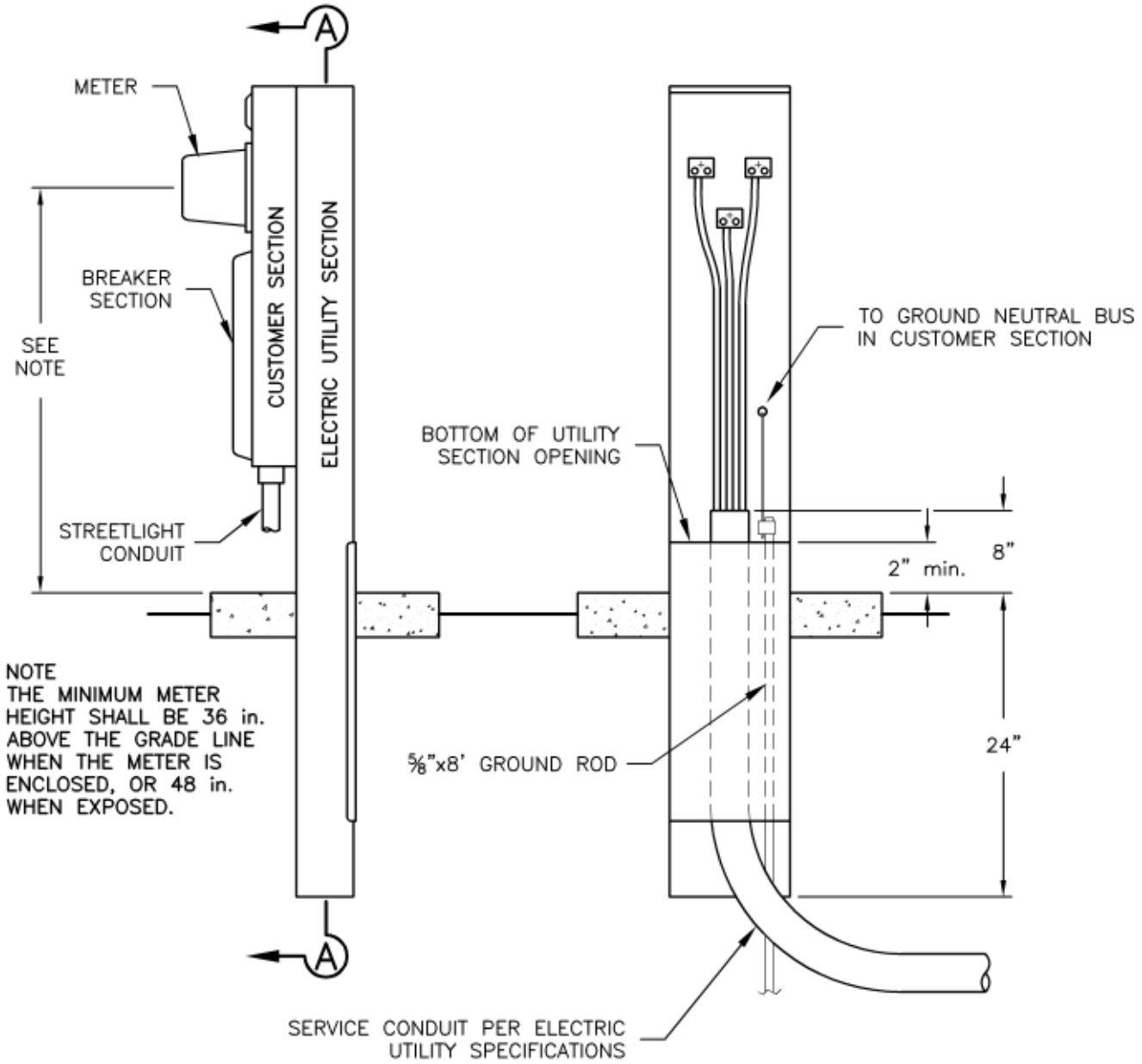

NOTE
THE MINIMUM METER HEIGHT SHALL BE 36 in. ABOVE THE GRADE LINE WHEN THE METER IS ENCLOSED, OR 48 in. WHEN EXPOSED.

SECTION A–A

Drawing name: M:\DATA\CAD\Standards\STL\0510\0902-1.dwg Plotted on: Feb. 18, 2011 - 10:27am

No.	REVISIONS	DATE	BY	CK'D	APP'D
4	ABBREVIATION REVISION	6/15/04	CW	AMS	

CITY OF LODI
ELECTRIC UTILITY DEPARTMENT

CONSTRUCTION STANDARD

STREETLIGHT METERING PEDESTAL

DATE	DRAWN	DESIGNED	CHECKED	APPROVAL		
08SEP98	TF	DJC	AMS		SHEET 1 OF 2	510 0902
					REVISION 4	

NOTE:

1. Streetlight metering pedestal shall be rated 100 amps maximum. Approval of the pedestal drawings by the Electric Utility Department is required prior to installation of the pedestal. Please forward pedestal drawings to: Metering Division, c/o City of Lodi, 1331 S. Ham Lane, Lodi, Ca 95242. The pedestal must meet E.U.S.E.R.C. Requirements (Electric Utility Service Equipment Requirements Committee).

2. The load side breaker for a streetlight circuit shall be rated as shown on plans. 120 or 277 volt circuits shall have single pole, single throw breakers. 208 or 240 volt circuits shall have double pole, single throw breakers.

3. Streetlight metering pedestal shall be used solely for the purpose of energizing streetlight circuits, unless otherwise approved by the Electric Utility Department.

4. A 36 in. minimum working clearance shall be maintained as measured from the meter face and from any access panel on the enclosure. A 12 in. minimum clearance shall be maintained from other parts of the meter post to other utility equipment.

5. The minimum meter height shall be 36 in. above the grade line when the meter is enclosed, or 48 in. when exposed.

6. The service cable and terminating section shall be covered with a sealable, removable panel extending from a fixed panel 2 in. minimum above finished grade or concrete. The removable panel shall allow full access to the service terminating lugs. Access to the service termination lugs may be from either the front or the rear of the pedestal. If access is from the rear, a 36 in. working clearance shall be maintained.

7. The minimum depth of the pedestal in the ground shall be 24 in.

8. Position the metering pedestal so that the electric meter is faced toward and perpendicular to the center line of the street.

9. A 5/8"x8' galvanized ground rod shall be installed inside the pedestal. Ground wire size shall be as required by NEC–1999.

10. Service conduit to the streetlight pedestal shall be installed by the developer. Conduit shall be sized and installed per Electric Utility Department Specifications.

11. Service cable to the streetlight pedestal shall be installed by the City of Lodi, Electric Utility Department, unless otherwise noted on plans.

12. Meter face is not to be obstructed by fencing, shrubbery or other materials.

13. Actual location of the streetlight metering pedestal shall be approved by the Electric Utility Department.

14. A permit and inspection of your service panel by the City's Building Inspection Division will be required prior to energization. Please note that any costs associated with the permit and inspection process can be obtained by calling the City of Lodi, City Hall, at (209) 333–6714.

15. Developer to pay for charges required in accordance with the Electric Utility Department's Rules and Regulations.

Drawing name: M:\DATA\CAD\Standards\STL\0510\0902-2.dwg Plotted on: Feb. 18, 2011 - 10:28am

No.	REVISIONS	DATE	BY	CK'D	APP'D
4	ABBREVIATION REVISION	6/15/04	CW	AMS	

CITY OF LODI
ELECTRIC UTILITY DEPARTMENT

CONSTRUCTION STANDARD

STREETLIGHT METERING PEDESTAL

DATE	DRAWN	DESIGNED	CHECKED	APPROVAL	SHEET 2 OF 2 / REVISION 4	510 0902
08SEP98	BA	DJC	AMS			

PAGE INTENTIONALLY LEFT BLANK