DRAFT

CITY OF LODI

2016 AMERICAN'S WITH DISABILITY ACT

SELF-EVALUATION AND TRANSITION PLAN

DRAFT

Cover Page

2016 ADA Transition Plan

Public Draft completed
November 16, 2017

This page intentionally left blank

DRAFT

Table of Contents

SECTION 1 – INTRODUCTION 1
Executive Summary 1
Legislative Mandate 2
ADA Self-Evaluation and Transition Plan Requirements and Process 3
Discrimination and Accessibility 3
Undue Burden 4
Facility Survey 4
Self-Evaluation 5
Public Outreach 6
SECTION 2 – POLICIES AND PROGRAMMATIC ACCESSIBITY FINDINGS AND ACTIONS 6
Introduction 6
Programmatic Modifications 7
Findings and Recommended Actions – Citywide Programs, Activities, and Services 7
Accessible/Adaptive Equipment 8
Self-Evaluation Findings 8
Recommended Actions 8
Customer Service 8
Self-Evaluation Findings 8
Recommended Actions 8
Notice Requirements 9
Self-Evaluation Findings 10
Recommended Actions 10
Printed Information 11
Self-Evaluation Findings 11
Recommended Actions 11
Televised and Audiovisual Public Information 12
Self-Evaluation Findings 12
Recommended Actions 12
Website – City and Departmental Websites 12
Self-Evaluation Findings 12
Recommended Actions 13
Public Telephones and Communication Devices 13
Self-Evaluation Findings 13
Recommended Actions 13
Training and Staffing 14
Self-Evaluation Findings 14
Recommended Actions 14
Program Eligibility and Admission 15
Self-Evaluation Findings 15
Recommended Actions 15
Public Meetings 15
Self-Evaluation Findings 15
Recommended Actions 15
Transportation Services 16

DRAFT

Self-Evaluation Findings 16
Recommended Actions 16
Use of Consultants for Delivering Program Services 17
Self-Evaluation Findings 17
Emergency Evacuation Procedures 17
Self-Evaluation Findings 17
Recommended Actions 17
Facilities 18
Self-Evaluation Findings 18
Recommended Actions 18
Special Events on Public Properties 18
Self-Evaluation Findings 18
Recommended Actions 18
Department Reports 18
Administration – City Manager, City Attorney, City Clerk, and Economic Development 19
Description of Programs and Services 19
Customer Service 19
Printed Information 19
Website 19
Public Telephones and Communication Devices 20
Training and Staffing 20
Public Meetings 20
Tours and Trips 20
Facilities 20
Community Development Department 20
Description of Programs and Services 20
Customer Service 21
Printed Information 21
Website 21
Public Telephones and Communication Devices 21
Training and Staffing 21
Public Meetings 21
Tours and Trips 21
Facilities 21
Electric Utility Department 22
Description of Programs and Services 22
Customer Service 22
Printed Information 22
Website 22
Training and Staffing 22
Program Eligibility Requirements and Admission 22
Public Meetings 22
Facilities 22
Fire Department 22
Description of Programs and Services 22

DRAFT

Customer Service 23
Printed Information 23
Television and Audiovisual Public Information 23
Website 23
Training and Staffing 23
Program Eligibility Requirements and Admission 23
Public Meetings 23
Facilities 23
Internal Services Department – Finance Division 23
Description of Programs and Services 23
Customer Service 24
Printed Information 24
Audiovisual Public Information 24
Website 24
Public Telephones and Communication Devices 24
Training and Staffing 24
Program Eligibility Requirements and Admission 24
Public Meetings 24
Facilities 24
Internal Services Department – Human Resources Division 24
Description of Programs and Services 24
Customer Service 25
Notice Requirements 25
Printed Information 25
Website 25
Public Telephones and Communication Devices 25
Training and Staffing 25
Public Meetings 26
Transportation Services 26
Tours and Trips 26
Facilities 26
Internal Services Department – Information Technology 26
Description of Programs and Services 26
Customer Service 26
Notice Requirements 26
Television and Audiovisual Public Information 27
Training and Staffing 27
Police Department 29
Description of Programs and Services 29
Customer Service 29
Printed Information 30
Website 30
Public Telephones and Communication Devices 30
Training and Staffing 30
Public Meetings 30

DRAFT

Public Transportation 30
Special Events and Private Events on Public Properties 30
Facilities 30
Public Works 30
Customer Service 31
Notice Requirements 32
Printed Information 32
Website 32
Public Telephones and Communication Devices 32
Public Meetings 32
Television and Audiovisual Public Information 32
Training and Staffing 32
Transportation Services 32
Facilities 32
Parks, Recreation and Cultural Services (PRCS) Department 27
Description of Programs and Services 27
Accessible/Adaptive Equipment 27
Customer Service 27
Notice Requirements 27
Printed Information 27
Television and Audiovisual Public Information 28
Website 28
Public Telephones and Communication Devices 28
Training and Staffing 28
Public Meetings 28
Transportation Services 28
Special Events and Private Events on Public Properties 28
Facilities 28
3.0 ADA Transition Plan 33
3.2 Pedestrian Rights-of-Way (PROW) 40
4.0 ADA Policy and Complaint Procedure 43
5.0 Definitions 44
5.1 Auxiliary Aids and Services 45
5.2 Complaint 45
5.3 Disability 45
5.4 Discrimination on the Basis of Disability 45
5.5 Having a Record of Impairment 46
5.6 Physical or Mental Impairments 46
5.7 Qualified Individual with a Disability 46
5.8 Reasonable Program Modifications 46
5.9 Regarded as Having a Disability 47
5.10 Substantial Limitations of Major Life Activities 47
5.11 Undue Burden 48

DRAFT

6.0 Program Accessibility Guidelines, Standards & Resources 48
6.1 Introduction 48
6.2 Federal Accessibility Standards and Regulations 48
6.3 Title II: US Department of Justice Publications 50
6.4 State of California Accessibility Standards and Regulations 52
Appendices 61

DRAFT

SECTION 1 – INTRODUCTION

Executive Summary

The City's American's With Disability Act Self-Evaluation and Transition Plan (ADA Transition Plan or Plan) is being prepared to partially fulfill the requirements set forth in Title II of the Americans with Disabilities Act (ADA). The ADA states that a public entity must reasonably modify its policies, practices, or procedures to avoid discrimination against people with disabilities. This report will assist the City of Lodi to identify policy, program, and physical barriers to accessibility and to develop barrier removal solutions that will facilitate the opportunity of access for all individuals.

The City of Lodi has a long history of providing accessible services to the community. Accessible pedestrian improvements, accessible building renovations, and the inclusive delivery of services have been accomplished with consideration of the needs of people with disabilities. Maintenance of existing accessible features has been and will continue to be a priority in City of Lodi facilities.

Title II of the ADA emphasizes the accessibility of programs, activities, and services. This Plan addresses these issues by providing recommendations for action steps based on a comprehensive review of current practices, including ADA Self-Evaluation Surveys that were completed by City staff regarding the delivery of services to the public. This process included every office, department, and division that provides services to the public.

When it is not feasible to provide accessible City programs, activities, and services by relocating these activities to accessible facilities or providing auxiliary aids and services, the ADA requires that the City complete a transition plan describing the physical modifications to facilities that will support accessible programs.

The City's Transition Plan described further in Section 3 and Appendix C is the result of a detailed evaluation of all City of Lodi municipal facilities where programs, activities, and services are available to the public. Municipal facilities include City buildings, parks, public parking lots, and City owned and managed facilities operated by private entities. Facilities that are not addressed in this ADA Title II plan include private businesses and offices, private schools, county, state, or federal facilities, places of worship, or private clubs.

The facility evaluations were conducted using the ADA 2010 Standards and the California Building Code. The resulting facility reports for City buildings, parks, and other facilities are contained in the appendices to this report. Each facility report lists potential barriers, provides information about the relevant state and federal codes, includes a planning level cost estimate to remove the barrier, and indicates a barrier removal priority.

The Transition Plan (Section 3) is intended to provide a framework for the continuous improvement of City facilities for people with disabilities. Barriers in City facilities will be removed systematically, citywide, based on established program priorities. It is the intent of the City of Lodi to address and remove barriers to accessibility in public buildings and parks based upon on the immediate necessity of programmatic access, degree of complexity, and overall cost.

A table contained in Section 3 describes the schedule for barrier removal in public facilities owned by the City of Lodi. This preliminary schedule represents a 15-year plan (2016 to 2031) for barrier removal and has a total estimated cost of $10.3 million. It is the City's intent to review all barriers during the first year of the implementation of this plan and address those barriers that can be resolved through programmatic modifications.

Many of the potential barriers identified are associated with facilities that currently have accessibility features which serve people with disabilities, such as designated parking, accessible restrooms, access ramps, accessible door hardware, and other code-compliant and usable features.

A public meeting was held on October 15, 2014, before the Lodi City Council to outline new policies and procedures that were being enacted, including the re-establishment of the City ADA Committee and the designation of the Neighborhood Services Manager as the citywide ADA/Section 504 Coordinator. A new citywide ADA/Section 504 Coordinator has since been reassigned in the fall of 2017 to the Public Works Director. The ADA/Section 504 Coordinator is responsible for coordinating the efforts of the City to comply with Title II and for investigating any complaints that the City has violated Title II of the ADA. The ADA/Section 504 Coordinator is also responsible for coordinating the City's efforts to comply with Title 24 and all other applicable state and federal physical and program accessibility requirements.

Legislative Mandate

The American with Disabilities Act (ADA) is a comprehensive civil rights law for persons with disabilities in both employment and the provision of goods and services. The ADA states that its purpose is to provide a "clear and comprehensive national mandate for the elimination of discrimination against individuals with disabilities." Congress emphasized that the ADA seeks to dispel stereotypes and assumptions about disabilities and to assure equality of opportunity, full participation, independent living, and economic self-sufficiency for people with disabilities. The development of a transition plan is a requirement of the federal regulations implementing the Rehabilitation Act of 1973, which requires that all organizations receiving federal funds make their programs available without discrimination toward people with disabilities. The act, which has become known as the "civil rights act" of persons with disabilities, states:

> No otherwise qualified handicapped individual in the United States shall, solely by reason of handicap, be excluded from the participation in, be denied the benefits of, or be subjected to discrimination under any program or activity receiving federal financial assistance. (Section 504)

Subsequent to the enactment of the Rehabilitation Act, Congress passed the Americans with Disabilities Act on July 26, 1990. Title II of the ADA covers the programs, activities, and services of public entities. The Department of Justice's Title II regulation adopts the general prohibitions of discrimination established under Section 504 and incorporates specific prohibitions of discrimination for the ADA. Title II provides protections to individuals with disabilities that are at least equal to those provided by the nondiscrimination provisions of Title V of the Rehabilitation Act. Specifically, the City may not, either directly or through contractual arrangements, do any of the following:

- Deny persons with disabilities the opportunity to participate as members of advisory boards and commissions.

- Deny persons with disabilities the opportunity to participate in services, programs, or activities that are not separate or different from those offered to others, even if the City offers permissibly separate or different activities.
- In determining the location of facilities, make selections that have the effect of excluding or discriminating against persons with disabilities.

Title II of the ADA provides that public entities must identify and evaluate all programs, activities, and services and review all policies, practices, and procedures that govern administration of the entity's programs, activities, and services. This report, and certain documents incorporated by reference, establishes the City's ADA Self-Evaluation and Transition Plan (ADA Transition Plan or Plan).

ADA Self-Evaluation and Transition Plan Requirements and Process

The self-evaluation is the City's assessment of its current policies, practices, and procedures. It identifies and makes recommendations to correct those policies and practices that are inconsistent with Title II requirements. As part of the self-evaluation, the City:

- Identified the City's programs, activities, and services; and
- Reviewed the policies, practices, and procedures that govern the administration of the City's programs, activities, and services.

The ADA sets forth specific requirements for preparation of an acceptable Transition Plan. This plan includes:

- A list of the physical barriers in the City's facilities that limit the accessibility of its programs, activities, or services to individuals with disabilities;
- A detailed outline of the methods to be used to remove these barriers and make the facilities accessible;
- Planning-level cost estimates for their removal;
- A schedule for taking the steps necessary to achieve compliance with the ADA, Title II; and
- The name of the individual responsible for the plan's implementation.

Discrimination and Accessibility

There are two kinds of accessibility:

- Program accessibility
- Physical accessibility

Absence of discrimination requires that both types of accessibility be provided. Program accessibility includes physical accessibility, but also entails all of the policies, practices, and procedures that permit people with disabilities to participate in programs and to access important information. Physical accessibility requires that a facility be barrier-free. Barriers include any obstacles that prevent or restrict

the entrance to or use of a facility. Program accessibility requires that individuals with disabilities be provided an equally effective opportunity to participate in or benefit from a public entity's programs and services. Program accessibility may be achieved by either structural or nonstructural methods. Nonstructural methods include acquisition or redesign of equipment, assignment of aides to beneficiaries, and provision of services at alternate sites.

Programs offered by the City to the public must be accessible. Accessibility includes advertisement, orientation, eligibility, participation, testing or evaluation, physical access, provision of auxiliary aids, transportation, policies, and communication. The City may achieve program accessibility through a number of methods:

- Structural methods such as altering an existing facility;
- Acquisition or redesign of equipment;
- Assignment of aides; and
- Providing services at alternate accessible sites.

When choosing a method of providing program access, the City will give priority to the method that results in the most integrated setting appropriate to encourage interaction among all users, including individuals with disabilities. In compliance with the requirements of the ADA, the City must provide equality of opportunity.

Undue Burden

The City is not required to take any action that it can demonstrate would result in a fundamental alteration in the nature of its program or activity, would create a hazardous condition resulting in a direct threat to the participant or others, or would represent an undue financial and administrative burden.

The determination that an undue burden would result must be based on an evaluation of all resources available for use in the City. For example, if a barrier removal action is judged unduly burdensome, the City must consider other options for providing access to the benefits and services of the program or activity by individuals with disabilities.

Facility Survey

From 2014 through 2017, the City engaged in a physical audit of facilities to identify facility barriers and identify recommendations and alterations in order to meet state and federal accessibility standards. The list of facilities surveyed included:

- City-owned parks
- City-owned buildings
- City-owned parking lots
- City-owned public rights-of-way adjacent to City-owned facilities and schools

Self-Evaluation

In 2014, the City of Lodi evaluated its policies, programs, and procedures to determine current levels of service and the extent to which its policies and programs created barriers to accessibility for persons with disabilities.

An ADA Self-Evaluation Survey was distributed to program managers in all departments requesting information on the nature of the program, the forms and methods used to advertise the program's services and activities, a profile of current participants, the types of equipment and materials used, testing and entrance requirements, the level of staff training, and any special modifications provided. The surveys were distributed to the following departments:

- Administration – City Manager, City Attorney, and City Clerk
- Community Development Department – Building, Planning, and Neighborhood Services
- Electric Utility Department– Customer Services, Public Benefits, and Field Services
- Fire Department
- Internal Services Department – Finance, Human Resources, and Information Services
- Parks, Recreation and Cultural Services –Parks/Facilities, Recreation, and Hutchins Street Square
- Police Department – Records/Customer Services
- Public Works Department – Administration/Engineering, Transit, and Municipal Utilities

Information provided in the completed ADA surveys and follow-up meetings with City staff revealed that the City's existing policies, programs, and procedures may present barriers to accessibility for people with disabilities. It is the City's intent to address the programmatic accessibility barriers in the following areas:

Customer Service – Policies and practices that ensure individuals with disabilities can participate in the programs, activities, and services provided by the City.

Outreach and Information – Notices, printed information, televised and audiovisual information, the City website, public telephones, and communication devices.

Training and Staffing – The current level of training and experience of City staff with policies and procedures regarding the provision of services to individuals with disabilities.

Programs and Activities – Program eligibility and admission, public meetings, tours and trips, transportation services, the use of consultants or contractors to provide City services, emergency evacuation procedures, special events and private events on City properties, maintenance of accessible programs, and ongoing accessibility improvements.

Accessible/Adaptive Equipment – The use of automated electronic equipment and auxiliary aids to assist individuals with disabilities to participate in City programs.

Public Outreach

In November and December of 2016, the draft ADA Transition Plan was introduced to the general public through a number of local committee meetings, including the City ADA Committee, the ADA Citizen Advisory Panel, and the Lodi Improvement Committee, for review and comment.

- ADA Coordinating Committee Meeting – July 23, 2014
- ADA Coordinating Committee Meeting – August 27, 2014
- ADA Committee and Citizen Advisory Panel – Public Meeting – September 24, 2014
- ADA Committee and Citizen Advisory Panel Public Meeting – January 14, 2015
- ADA Coordinating Committee Meeting – February 12, 2015
- ADA Coordinating Committee Meeting – March 12, 2015
- ADA Committee and Citizen Advisory Panel Public Meeting – May 27, 2015
- ADA Coordinating Committee Meeting – June 11, 2015
- ADA Committee and Citizen Advisory Panel – Public Meeting – September 1, 2015
- ADA Coordinating Committee Meeting – October 8, 2015

During November and December of 2017, the final draft ADA Transition Plan will be posted online and at City Hall for a 30-day public comment period. The City ADA Committee, ADA Citizen Advisory Panel, and Lodi Improvement Committee will also review and comment on the final draft ADA Transition Plan. The City will hold a City Council shirt-sleeve meeting on November 28, 2017, for an in-depth review of the plan with Council. On December 20, 2017, a public meeting will be held for final comments and adoption of the ADA Transition Plan. Both meetings will be publicly noticed.

The City received comments during the public outreach period; the comments are included in Appendix B. The City Council adopted the ADA Transition Plan on December 20, 2017.

SECTION 2 – POLICIES AND PROGRAMMATIC ACCESSIBILITY FINDINGS AND ACTIONS

Introduction

Programs, activities, and services offered by the City of Lodi to the public must be accessible. Accessibility applies to all aspects of a program or service, including advertisement, orientation, eligibility, participation, testing or evaluation, physical access, provision of auxiliary aids, transportation, policies, and communication.

This section details the review of current citywide policies, services, programs, and activities based on meetings with City staff and responses to the ADA Self-Evaluation from the following:

- Administration – City Manager, City Attorney, and City Clerk
- Community Development Department – Building, Planning, and Neighborhood Services
- Electric Utility Department– Customer Services, Public Benefits, and Field Services

- Fire Department
- Internal Services Department – Finance, Human Resources, and Information Services
- Parks, Recreation and Cultural Services – Customer Services, Recreation, Parks/Facilities, and Hutchins Street Square
- Police Department – Records/Customer Services
- Public Works Department – Administration/Engineering, Transit, and Municipal Utilities

The findings and recommendations in this section will serve as a basis for the implementation of specific improvements for providing access to City programs as required by law. Detailed department reports can be found in Section 2.

Programmatic Modifications

The ADA/Section 504 Coordinator will follow up with each department to review the recommendations contained in this Self-Evaluation Report. In those situations where a policy, program, or procedure creates a barrier to accessibility that is unique to a department or a certain program, the ADA/Section 504 Coordinator will coordinate with the department head or program manager to address the removal of the barrier in the most reasonable and accommodating manner in accordance with applicable law.

Findings and Recommended Actions – Citywide Programs, Activities, and Services

This section is organized into categories based on the requirements of Title II of the ADA.

- Accessible/Adaptive Equipment
- Customer Service
- Notice Requirements
- Printed Information
- Televised and Audiovisual Public Information
- Website
- Public Telephones and Communication Devices
- Training and Staffing
- Program Eligibility and Admission
- Public Meetings
- Transportation Services
- Tours and Trips
- Use of Consultants for Delivering Program Services
- Emergency Evacuation Procedures
- Facilities
- Special Events on Public Properties

DRAFT

Accessible/Adaptive Equipment

Adaptive aids are devices, controls, appliances, or items that make it possible for persons with disabilities to improve their ability to function independently and participate in programs, services, and activities offered by the City. Examples include a pen and a clipboard for a person with a hearing or speech impairment to write notes on, or accessible electronic equipment such as accessible computer stations.

Self-Evaluation Findings

One department reported allowing the public to use or access electronic equipment such as photocopiers and computers. Three departments reported providing adaptive aids and/or equipment.

Recommended Actions

1. Provide standard equipment at each site where programs are administered to facilitate basic communications access using alternative formats. Equipment may include, but is not limited to, paper and pencil, an enlarging copy machine, and access to 711 relay service technology. ***By Jan. 1, 2020.***

2. Collaborate with community organizations that serve people with disabilities to develop and maintain a current resource list of assistive technology equipment and sources. ***By Jan. 1, 2019.***

3. Establish and maintain a "Resources Toolkit" of adaptive aids and human resources that should be available for use by individuals participating in City programs. Include information about the availability of specific equipment and/or individuals who are available to provide special services (e.g., American Sign Language [ASL] translation) in public information materials such as brochures and the City's website. ***By Jan. 1, 2019.***

4. Include accessibility as a criterion for purchasing. Whenever possible, evaluate furniture and building materials purchases for compatibility with a wide range of disabilities and sensitivities. Select items that are easily adjustable or can be modified to accommodate a variety of physical and ergonomic needs when purchasing items such as furniture, site furnishings, and office systems. ***By Jan. 1, 2019.***

5. Maintain accessible equipment already in place. ***By Jan. 1, 2019.***

Customer Service

In-person interaction with the public is one of the primary functions of most City departments.

Self-Evaluation Findings

No department reported that it tracked accessibility requests; however, all departments reported that requests are received and responded to on an individual basis. No department reported charging an additional fee for modifying a program for a person with a disability. Few departments have a policy or procedure for making informal changes to standard operating procedures to accommodate people with disabilities.

Recommended Actions

1. Continue to make appropriate modifications to regular practices to accommodate the needs of individuals with disabilities when providing customer service. ***By Jan. 1, 2019.***

2. Develop criteria for determining reasonable modifications to provide program accessibility, which may include acquisition or redesign of equipment, assignment of aides to persons with disabilities, and provision of services at alternative accessible sites. An approach should include:

    - Requests for reasonable modification in programs or services should be made to the department responsible for the program or service. ***By Jan. 1, 2019.***

    - The department offering the program or service should meet with the individual with a disability to identify which aspects of the program limit participation and what modifications can be made. ***By Jan. 1, 2019.***

    - The department offering the program or service should consult with the relevant program or service staff to determine the reasonable modification. The department offering the program or service may also consult with the City's ADA/Section 504 Coordinator or other resources providing services or information regarding persons with disabilities, as appropriate. ***By Jan. 1, 2019.***

    - The department offering the program or service should document the modification(s) that was offered and the response of the person with the disability to the modification(s) offered. This documentation should be filed with the City ADA/Section 504 Coordinator's office. All accessibility requests should be tracked. The ADA requests should be analyzed periodically to look for global issues that can be addressed and problems than can be solved proactively. ***By Jan. 1, 2019.***

    - If individuals with a disability are not satisfied with the results of this process, they should be directed to the City's ADA Grievance Procedure. ***By Jan. 1, 2019.***

3. Assess the composition and needs of the population of people with disabilities. Take the necessary steps to improve communication and outreach to increase the effective participation of community members with disabilities in all City programs and activities. The ADA Citizen Advisory Panel will provide guidance and assistance with this action. ***By Jan. 1, 2020.***

4. Create partnerships with organizations that provide services to people with disabilities to assist in communicating about accessible City programs. Keep programs up to date through increased community involvement and partnerships with organizations that offer services to persons with disabilities. ***By Jan. 1, 2019.***

5. Publicize efforts to increase participation by persons with disabilities, which might include activities such as distributing program brochures to members of the disability community. ***By Jan. 1, 2019.***

6. Continue the policy of not charging an additional fee for program modifications or alternative formats. ***By Jan. 1, 2019.***

Notice Requirements

Title II regulations require the City to inform the public of the rights and protections provided by the ADA for access to public programs, services, and activities.

Self-Evaluation Findings

Most departments were unaware that the City has a nondiscrimination statement that includes persons with disabilities. Only one department reported posting a nondiscrimination statement in a location that maximizes public exposure. The nondiscrimination statement includes information about how to reach the City's ADA/Section 504 Coordinator. A few departments notify all persons that meetings, hearings, and conferences will be held in accessible locations and that adaptive aids such as assistive listening devices will be provided upon request to participants with disabilities. Nondiscrimination language is included on agendas.

No department reported notifying all persons about how and with whom to file a disability complaint.

Recommended Actions

1. Increase outreach to persons with disabilities and the organizations that serve them. The City should inform the public of the possible modifications that can be provided to make services, programs, and activities accessible. ***By Jan. 1, 2019.***

2. Include the following or similar notice regarding the City's commitment to providing accessible services in all City publications that include information about City services, programs, or activities. The notice should also be placed in all City departments in a location that will maximize public exposure. ***By Jan. 1, 2019.***

   In accordance with the Americans with Disabilities Act and California law, it is the policy of the City of Lodi to offer its public programs, services, and meetings in a manner that is readily accessible to everyone, including individuals with disabilities. If you are a person with a disability and require information or materials in an appropriate alternative format, or if you require any other accommodation, please contact department staff. Advance notification within this guideline will enable the City to make reasonable arrangements to ensure accessibility. The City ADA/Section 504 Coordinator can be reached at (209) 333-6706, pwdept@lodi.gov, or on-line at http://www.lodi.gov/accessibility.html:. More information is available at that web address as well.

3. Include nondiscrimination language on both hard copies and documents posted on the web. Include the following or similar notice regarding the City's nondiscrimination policy in all City publications that provide general information about City services, programs, or activities. ***By Jan. 1, 2019.***

   POLICY ON NONDISCRIMINATION ON THE BASIS OF DISABILITY

   In accordance with the requirements of Title II of the Americans with Disabilities Act of 1990 (ADA) and Section 504 of the Rehabilitation Act of 1973 (Section 504), the City of Lodi will neither discriminate against qualified individuals with disabilities on the basis of disability in its services, programs, or activities nor exclude or deny individuals with disabilities an equal opportunity to receive program benefits and services.

4. Ensure that the ADA/Section 504 Coordinator can communicate to the hearing impaired using the 711 California Relay Service. ***By Jan. 1, 2019.***

5. Develop a statement regarding accessible locations and the availability of auxiliary aids upon request that is included on all public announcements, postings for City programs, and applications, including the following:
    - The notice of nondiscrimination. ***By Jan. 1, 2019.***
    - Information regarding site accessibility, including the accessible bus route serving the program, facility, or event. ***By Jan. 1, 2019.***
    - The 711 California Relay Service information, and the phone number and email address of the person who can provide assistance in meeting special needs. ***By Jan. 1, 2019.***
    - A notice that information is available in alternative formats with 72 hours' notice. ***By Jan. 1, 2019.***

Printed Information

In order to meet the ADA's communication standards, City departments must be able to provide information, when requested, in alternative formats such as using easy-to-understand language, Braille, large-print format, audiotape or CD, computer disk, or other formats as requested.

Self-Evaluation Findings

All departments provide printed information to the public. Some departments reported that they provided printed materials in alternative formats upon request. No departments reported including pictures of people with disabilities in their printed materials. A few departments reported that they provide materials in easy-to-understand language for people with learning disabilities.

Recommended Actions

1. Provide information to each department on how to produce printed information in alternative formats for persons with various disabilities to ensure requests are handled in a uniform and consistent manner. ***By Jan. 1, 2019.***
2. Publicize the City's commitment to provide program information in alternative formats on an individual basis as requested. ***By Jan. 1, 2019.***
3. Ensure the uniformity of charges for a publication for all formats of that publication. ***By Jan. 1, 2019.***
4. Include the following notice on all materials printed by the City that are made available to the public: This publication can be made available in alternative formats, such as Braille, large print, audiotape, or computer disk. Requests can be made by calling the ADA/Section 504 Coordinator at (209) 333-6707 (voice) or by using the 711 California Relay Service. Please allow 72 hours for your request to be processed. ***By Jan. 1, 2019.***
5. Handle all requests for other alternative formats or lengthy documents on an individual basis, but track the requests for future reporting. ***By Jan. 1, 2019.***
6. Provide program, facility, permit, and reservation information in a variety of formats upon request (for example, enlarged print format for persons with visual disabilities or in simple

language for persons with cognitive disabilities). Provide programmatic changes (e.g., staff assistance) upon request to assist in filling out forms or when alternative formats are unavailable or infeasible. ***By Jan. 1, 2019.***

7. Produce meeting agendas and other public information distributed at meetings in alternative formats when requested. ***By Jan. 1, 2019.***

8. When photos are in printed information, consider including photos of persons with disabilities. ***By Jan. 1, 2019.***

Televised and Audiovisual Public Information

Televised and audiovisual information is a means for disseminating public information through presentations produced by City departments. All televised and audiovisual information must be accessible to persons with disabilities. As more and more communication is being done remotely via the rapidly changing Internet, it will be increasingly important that all communication tools maintain accessibly as technology changes.

Self-Evaluation Findings

Most departments that reported providing audiovisual and televised presentations do not furnish alternative formats upon request. No departments reported showing pictures of people with disabilities in their audiovisual presentations.

Recommended Actions

1. Use closed captioning or other alternatives to audio presentations for City programs and for audiovisual presentations produced by the City (including videos, films, and City Council meetings) to ensure that persons with hearing impairments can benefit from the presentations. ***By Jan. 1, 2021.***

2. When presenting PowerPoint presentations, read all slides and describe all graphics. This will allow the blind and visually impaired to fully understand the information being presented. ***By Jan. 1, 2020.***

3. When including images in audiovisual information, consider including pictures of people with disabilities. ***By Jan. 1, 2019.***

Website – City and Departmental Websites

Providing public access to City publications online is an effective means of reaching persons with disabilities. New accessibility standards for electronic and information technology covered by Section 508 of the Rehabilitation Act Amendments of 1998 set forth the technical and functional performance criteria necessary for such technology to be accessible.

Self-Evaluation Findings

Most departments provide information about their programs on the City's website. However, no department reported including information about access for people with disabilities, such as locations of accessible parking and restrooms. No departments note that they verified their web pages as accessible

to people with visual impairments that use speaking browsers. Content is managed by various departments.

Recommended Actions

1. Increase outreach to persons with disabilities by having the website include more information about the City's commitment to providing accessible services. ***By Jan. 1, 2019.***

2. Publish the City's Policy of Nondiscrimination, including on the basis of disability, on the City's website. ***By Jan. 1, 2019.***

3. Provide information regarding programs, facilities, permits, and reservations on the City's website in an accessible format. This information should be easily found by new web users. ***By Jan. 1, 2019.***

4. Include the City's statement regarding accessible locations and the availability of auxiliary aids upon request on the website. ***By Jan. 1, 2019.***

5. Continually improve the accessibility of web pages through the use of web accessibility analysis to meet and/or exceed Section 508 of the Rehabilitation Act guidelines for accessibility of electronic information. Acquire the technological resources necessary to create accessible PDF and graphics files as described in ADA Accessibility Guidelines (ADAAG) standards for electronic and information technology. ***By Jan. 1, 2019.***

6. Assign one department the authority to provide standards and oversight for outside vendors who create pages and for departments that post their own documents. This action will support consistent and accessible web pages. Monitor web pages for continued compliance with accessible web page standards. ***By Jan. 1, 2019.***

7. Train City staff members in creating accessible PDF and other electronic files for posting on City or departmental websites. ***By Jan. 1, 2019.***

8. Use services that help web page authors create and maintain an accessible website by identifying and repairing barriers to access for individuals with disabilities. ***By Jan. 1, 2019.***

Public Telephones and Communication Devices

Self-Evaluation Findings

Few departments reported using the California Relay Service, or 711, to communicate with people with hearing and/or speech impairment. Few departments stated that they train their staff on how to communicate with people with hearing and/or speech impairment.

Recommended Actions

1. Train staff members in the means of communicating over the telephone with a person with a hearing or speech impairment, such as the California Relay Service (CRS), or 711. ***By Jan. 1, 2019.***

2. In all publications that list phone numbers, include information on how people with hearing and/or speech impairment can communicate with departments by phone. ***By Jan. 1, 2019.***

3. Consider Video Remote Interpreting Services (VRI) for communicating with people with hearing and/or speech impairment. There are many situations where a live interpreter is required, such as in medical situations, but VRI is a convenient, flexible, lower-cost alternative to live interpreters. ***By Jan. 1, 2020.***

Training and Staffing

Self-Evaluation Findings

Few departments reported that their staff receives regular training for interacting with persons with a disability.

Recommended Actions

1. Provide all City staff members with ongoing awareness and sensitivity training. ***By Jan. 1, 2021.***
2. Train City staff members who have contact with the public about how to provide modifications and use assistive devices to make their programs, activities, and services accessible. Ensure that customer service training includes information about communicating with and providing modifications for persons with a variety of disabilities. Include program-specific adaptations, assistive devices, and modifications in each department's accessibility policy manual.
3. Develop a comprehensive disability access training program. Educate all City staff about their responsibilities under the ADA. The City's ADA/Section 504 Coordinator and department supervisors should be responsible for ensuring that staff members receive training. Reference materials that address special modifications should be included in this training. ***By Jan. 1, 2021.***
4. Develop standard guidelines for training materials. These guidelines should include standard language that appropriately describes the City's policy on inclusion and nondiscrimination, and staff members should receive training in using the guidelines effectively. ***By Jan. 1, 2021.***
5. Whenever staff has contact with the public and depending on operational needs, consider offering training to employees who wish to learn basic American Sign Language (ASL) communication skills. This training should emphasize basic communication skills and should not be viewed as a substitute for utilizing qualified ASL interpreters when requested. ***By Jan. 1, 2021.***
6. Train Maintenance Services staff with respect to accessibility compliance and building codes to maintain facilities in an accessible condition. ***By Jan. 1, 2021.***
7. Train City staff members in general building evacuation procedures for assisting persons with hearing, speech, visual, mobility, and learning disabilities in an emergency. ***By Jan. 1, 2021.***
8. Designate one manager in each department to serve as the department's disability access liaison. The liaison will be required to complete a training program and attend periodic retraining regarding accessibility issues. ***By Jan. 1, 2021.***

DRAFT

Program Eligibility and Admission

The public should be able to access all programs, services, and activities, regardless of disability. Admission criteria, ability to complete forms, and participation in interviews should be available to all members of the public by providing reasonable accommodations.

Self-Evaluation Findings

No departments reported having limitations or ratio requirements that would exclude persons with disabilities. Some departments noted that they have eligibility requirements. These requirements were physical or mental performance standards for staff based on performance and safety standards. Most program-related forms do not contain a nondiscrimination statement.

Recommended Actions

1. Ensure that individuals with disabilities are not excluded from regular programs and are not required to accept special services or benefits. Involve individuals with disabilities in regular programs to the maximum extent possible. ***By Jan. 1, 2019.***

2. Modify policies, practices, or procedures to avoid discrimination unless the modification would fundamentally alter the nature of the program or create a hazardous situation. ***By Jan. 1, 2019.***

3. Ensure that when specific requirements that exclude or limit the participation of persons with disabilities are necessary for the safe operation of programs, those requirements are based on real risks, not on speculation, stereotypes, or generalizations. ***By Jan. 1, 2019.***

4. Include a nondiscrimination statement on all forms. ***By Jan. 1, 2019.***

5. When interviews are required for program participation, ensure that the meetings are held in an accessible location and that auxiliary aids are provided upon request. ***By Jan. 1, 2019.***

Public Meetings

Self-Evaluation Findings

Most departments hold public meetings. All meetings are required to be held in accessible locations. Some departments reported that they provide auxiliary aids upon request to allow people with disabilities to fully participate in meetings.

Recommended Actions

1. Continue to schedule public meetings at accessible locations. An accessible location includes, but is not limited to, the following: wheelchair-accessible path of travel to the meeting room, accessible restrooms, accessible parking, an accessible route from transit and parking to the meeting facility, temperature control, signage, and the ability to provide access to fresh air for persons with chemical sensitivities. ***By Jan. 1, 2019.***

2. Maintain a list of on-call American Sign Language interpreters who may be brought to meetings to assist individuals with hearing impairments (see Section 6). ***By Jan. 1, 2019.***

3. When a fully accessible site is not available, make reasonable modifications so that an individual with a disability can participate. ***By Jan. 1, 2019.***

DRAFT

4. Make information available to City staff on the types of modification requests that may be made by persons with different types of disabilities. Provide information about auxiliary aids such as different types of assistive listening systems, sign language interpreters, readers, descriptive services, and other assistive technologies like "real-time captioning." Provide guidance in the layout of the room, sign-in table, and refreshments table to ensure these features are accessible. ***By Jan. 1, 2019.***

5. Display a notice on meeting agendas indicating the availability of accessibility modifications. ***By Jan. 1, 2019.***

6. Prepare agendas and other meeting materials in alternative formats, when requested. ***By Jan. 1, 2019.***

7. Allow flexibility in the time limit on speaking for individuals with communication difficulties. ***By Jan. 1, 2019.***

8. Provide assistive listening devices at public meetings, when requested. ***By Jan. 1, 2019.***

9. Develop a checklist for creating accessible meetings and selecting accessible meeting spaces, and make the list available to all City departments and programs. ***By Jan. 1, 2019.***

10. Prepare a list of already accessible meeting spaces to facilitate the scheduling of meetings and/or the relocation of meetings upon request. ***By Jan. 1, 2019.***

11. Move disability-related agenda items to the beginning of agendas when possible. Some people with disabilities are unable to stay late at meeting because they use paratransit or have fixed schedules and/or need to use personal care attendants. ***By Jan. 1, 2019.***

Transportation Services

Self-Evaluation Findings

Two departments reported providing transportation services to the public. One department reported that assistance is offered to people with disabilities.

Recommended Actions

1. Ensure that all transportation services are provided in a way that allows people with mobility, visual, speech, hearing, and cognitive disabilities to fully participate. ***By Jan. 1, 2019.***

2. Evaluate the trip destination to determine the level of accessibility and any accommodations or modifications that may be required. ***By Jan. 1, 2019.***

3. If a tour route or a portion of a route is not accessible, continue the practice of rerouting the tour or providing alternate accommodation (photographs, close-captioned videos, etc.) that will allow the tour to be experienced by persons with disabilities. ***By Jan. 1, 2019.***

4. Provide information to participants in advance of a tour or trip regarding the destination, transportation, and other characteristics of the event so that informed requests for accommodations can be made. ***By Jan. 1, 2019.***

5. Include information about accessibility of the tour on the program's website. ***By Jan. 1, 2019.***

Use of Consultants for Delivering Program Services

Self-Evaluation Findings

Two departments reported the use of consultants for delivering program services.

Recommended Actions

No recommendations at this time due to using consultant services.

Emergency Evacuation Procedures

Self-Evaluation Findings

Some departments were not aware if emergency evacuation procedures were available for people with disabilities.

Recommended Actions

1. Develop guidelines for the evacuation of persons with disabilities in various types of emergency situations. Each department, division, or program should use these guidelines to create emergency evacuation plans. These plans should:
    - Address what to do when an alarm is triggered. ***By Jan. 1, 2019.***
    - Establish meeting places for assistance and evacuation chairs. ***By Jan. 1, 2019.***
    - Provide direction on what to do if assistance is not available. ***By Jan. 1, 2019.***
2. Research specific suggestions for evacuation plans and procedures through the US Access Board: http://www.ada.gov/emergencyprepguide.htm and the Emergency Procedures for Employees with Disabilities in Office Occupancies document published by FEMA and the US Fire Administration. ***By Jan. 1, 2019.***
3. Train City staff regarding emergency evacuation procedures with periodic drills, both announced and unannounced. ***By Jan. 1, 2019.***
4. Review existing procedures dealing with emergencies to ensure that persons with disabilities can be alerted and that they can alert emergency service providers. Provide all evacuation policies and procedures in alternative formats when requested. Work with disability organizations to explore the use of other technologies, such as audible exit signs for orientation and direction, and vibrating paging systems. ***By Jan. 1, 2019.***
5. Train public safety personnel to enable them to communicate in basic American Sign Language in the event there is an emergency condition and the area is being evacuated. For example, this training would be provided to police officers, firefighters, lifeguards, and building inspectors involved in post-disaster emergencies. ***By Jan. 1, 2019.***
6. Take the necessary steps to ensure that emergency teams are aware of persons with disabilities in their communities who may require special assistance in the event of an emergency. ***By Jan. 1, 2019.***

DRAFT

7. Provide American Sign Language interpreters at emergency facilities, on an as-needed basis. To accomplish this, form a pool of interpreters as a resource from which to draw (see Section 6). ***By Jan. 1, 2019.***

Facilities

Self-Evaluation Findings

No department reported that it tracked accessibility complaints related to City facilities.

Recommended Actions

1. Provide information about facility accessibility in department publications, including on the department's website. ***By Jan. 1, 2019.***
2. Track all requests relating to facility access. The ADA requests should be analyzed periodically to look for global issues that can be addressed and problems than can be solved proactively. ***By Jan. 1, 2019.***

Special Events on Public Properties

Self-Evaluation Findings

One department reported that it offers special events on City property. This department has a policy in place to ensure the events are accessible to people with disabilities.

Recommended Actions

1. In situations where private organizations sponsor events in City facilities, inform private organizations about applicable ADA requirements. ***By Jan. 1, 2019.***
2. Provide a checklist and information during the application process to inform organizers of their responsibility for accessibility under the ADA. The checklist and information will be available on the City's website. ***By Jan. 1, 2019.***

Department Reports

This section documents the ways in which the City is currently providing accessible programs and services to the public. The following are survey summaries based on answers to the ADA Self-Evaluation Surveys for programs and services.

- Administration – City Manager, City Attorney, City Clerk, and Economic Development
- Community Development Department – Building, Planning, and Neighborhood Services
- Electric Utility Department – Customer Services, Public Benefits, and Field Services
- Fire Department
- Internal Services Department – Finance, Human Resources, and Information Services
- Parks, Recreation and Cultural Services – Customer Services, Recreation, Parks/Facilities, and Hutchins Street Square

- Police Department – Records/Customer Services
- Public Works Department – Administration/Engineering, Transit, and Municipal Utilities

Administration – City Manager, City Attorney, City Clerk, and Economic Development

Description of Programs and Services

The City Manager's Office is responsible for the management of all City functions. The City Attorney's Office provides legal services for the City. The City Clerk's Office coordinates and administers the City's records retention and management; maintains the legislative history, including preparation of City Council minutes, resolutions, and ordinances; and is the custodian of the City seal and all official City records. In addition, the City Clerk's Office is responsible for preparing and publishing all legal notices for the City; receiving and processing initiative petitions; administering and enforcing the Local Conflict of Interest Code, as well as federal and state laws regarding election and campaign financing disclosure; and coordinating municipal elections. Economic Development serves as the liaison between businesses and commercial districts and City government. The office provides support and assistance to both existing and prospective businesses looking to locate in Lodi. The vision of Economic Development is to preserve and enhance the business climate to ensure the City is financially stable and partners with the community in its commitment to improve the quality of life.

Members of the public come into Administration offices for records, Council-related documents and questions, and election information, to file claims against the City, and to apply to serve on City boards and commissions.

Customer Service

- Administration has no policies or practices that could have the direct or indirect effect of excluding or limiting the participation of individuals with disabilities.
- Services provided by Administration can be carried out at the entry lobby tables instead of the nearby counter where the height may be uncomfortable.
- There are no circumstances in which a person with a disability would be asked to pay a fee or meet any other requirement not imposed on other program participants.
- The City does not have any policies that exclude service animals.
- Administration does not track accessibility requests; however, the City makes accommodations for people with disabilities upon request on an individual basis.

Printed Information

- Administration produces printed materials.
- Administration provides printed materials in an electronic format.

Website

- Administration has a page on the City's website.

Public Telephones and Communication Devices

- Administration does not communicate by telephone with people with a hearing or speech impairment using TTY.
- Administration staff has not received training on communication by telephone with persons with hearing or speech impairments with the assistance of a 711 operator.

Training and Staffing

- Staff in Administration have contact with the public.

Public Meetings

- Administration holds regular public meetings.
- Public meetings, hearings, and conferences are held in accessible locations.

Tours and Trips

- Administration does not provide tours and trips.

Facilities

- City Hall
- Carnegie Forum

Community Development Department

Description of Programs and Services

The Community Development Department includes the following divisions:

- Building
    - Responsible for performing architectural and structural plan checks, scheduling and performing building inspections, and providing general customer information services. The division is responsible for administering the California Building, Plumbing, and Electrical Codes and other applicable development regulations.
- Planning
    - Responsible for two major activities: current and advanced planning. The division is charged with implementing the City's General Plan and Zoning Ordinance. Staff works with developers to help them meet the standards adopted by the City Council. The Planning Division provides staff to the Planning Commission and to the Site Plan and Architectural Review Committees.
- Neighborhood Services
    - Responsible for the administration of federal funds received from the US Department of Housing and Urban Development (HUD). Federal funds administered by the division support programs and services for low- to moderate-income citizens and neighborhoods to increase self-sufficiency and meet needs that are otherwise not being met in the

community. The division works closely with the Lodi Improvement Committee in developing programs to improve the quality of life for Lodi residents.

Customer Service

- Community Development has no policies or practices that could have the direct or indirect effect of excluding or limiting the participation of individuals with disabilities.
- Services provided by Community Development can be carried out at the entry lobby tables or in an adjacent conference room instead of at the nearby counter where the height may be uncomfortable. There is an accessible pull-out counter at the front counter.
- There are no circumstances in which a person with a disability would be asked to pay a fee or meet any other requirement not imposed on other program participants.
- The City, including Community Development, does not have any policies that exclude service animals.
- Community Development tracks accessibility requests.

Printed Information

- Community Development produces printed materials.
- Community Development will provide printed materials in a variety of alternative formats.

Website

- Community Development has a page on the City's website.

Public Telephones and Communication Devices

- Community Development does not communicate by telephone with people with a hearing or speech impairment using TTY.
- Community Development staff have not received training on communication by telephone with persons with hearing or speech impairments with the assistance of a 711 operator.

Training and Staffing

- Community Development staff have contact with the public.

Public Meetings

- Community Development holds regular public meetings.

Tours and Trips

- Community Development does not provide tours and trips.

Facilities

- City Hall
- Carnegie Forum

Electric Utility Department

Description of Programs and Services

The Electric Utility Department coordinates, administers, and maintains the delivery of electric utility services throughout the community.

Customer Service

- The Electric Utility Department has no policies or practices that could have the direct or indirect effect of excluding or limiting the participation of individuals with disabilities.
- There are no circumstances in which a person with a disability would be asked to pay a fee or meet any other requirement not imposed on other program participants.
- The department does not have any policies that exclude service animals.

Printed Information

- The Electric Utility Department produces printed materials.

Website

- The Electric Utility Department has a page on the City's website.
- Material for the Electric Utility Department web page is produced by the Electric Utility Department.

Training and Staffing

- Electric Utility Department staff have contact with the public.

Program Eligibility Requirements and Admission

- There are no circumstances in which the participation of a person with a disability participating in Electric Utility Department programs, services, or activities would be restricted or excluded.

Public Meetings

- The Electric Utility Department does not hold public meetings.

Tours and Trips

- The Electric Utility Department does not provide tours and trips.

Facilities

- Municipal Service Center

Fire Department

Description of Programs and Services

The Fire Department provides emergency fire and medical response services to the Lodi community. It is responsible for the protection of life and property and for the enforcement of fire, life, and safety requirements through fire prevention and public education programs.

Customer Service

- The Fire Department has no policies or practices that could have the direct or indirect effect of excluding or limiting the participation of individuals with disabilities.
- There are no circumstances in which a person with a disability would be asked to pay a fee or meet any other requirement not imposed on other program participants.
- The Fire Department does not have any policies that exclude service animals.

Printed Information

- The Fire Department produces printed materials.

Television and Audiovisual Public Information

- The Fire Department produces presentations and audiovisual public information.
- The Fire Department does not provide alternative formats.

Website

- The Fire Department has a page on the City's website; department staff are responsible for content.

Training and Staffing

- Fire Department staff have contact with the public.

Program Eligibility Requirements and Admission

- There are no circumstances in which the participation of a person with a disability participating in Fire Department programs, activities, and services would be restricted or excluded.

Public Meetings

- The Fire Department does not hold public meetings.

Facilities

- Fire Station No. 1/Fire Administration
- Fire Station No. 2
- Fire Station No. 3
- Fire Station No. 4

Internal Services Department – Finance Division

Description of Programs and Services

The Finance Division provides fiscal and technological support services to all City departments and programs. The division manages the development and analysis of the budget, year-end audited financial statements, accounts payable, revenue tracking and collection, payroll, and the processing of all business license and other day-to-day financial transactions for the City. Finance also oversees the investment of City funds and provides strategic planning and analysis necessary to preserve the City's superior credit rating and safeguard City resources.

Customer Service

- There are no circumstances in which a person with a disability would be asked to pay a fee or meet any other requirement not imposed on other program participants.
- The Finance Division does not have any policies that exclude service animals.
- Finance provides alternatives to assist customers who are unable to stand in line for long periods of time.

Printed Information

- Finance produces printed materials.
- Finance does not make printed materials available in alternative formats.

Audiovisual Public Information

- Finance does not produce audiovisual presentation for the public.

Website

- Finance has a page on the City's website.
- The web page provides contact and financial information.

Public Telephones and Communication Devices

- Finance staff are trained on communication by telephone with persons with hearing or speech impairments with the assistance of a 711 operator.

Training and Staffing

- Finance Division staff have contact with the public.
- Finance staff do not have training on interacting with people with disabilities.

Program Eligibility Requirements and Admission

- There are certain eligibility requirements to receive some services.
- Finance provides reasonable accommodation for persons with disabilities.

Public Meetings

- Finance does not hold public meetings.

Facilities

- City Hall Annex

Internal Services Department – Human Resources Division

Description of Programs and Services

Human Resources provides employment support to all City departments. The office coordinates employee recruitment and hiring and provides ongoing salary and benefits support to the City's employees. The office works to promote positive employee and labor relations, to maximize the use of City resources toward a competitive salary and benefit program, and to minimize potential losses through a comprehensive risk management program.

Customer Service

- Human Resources is not aware of policies or practices that would require physical ability as an eligibility requirement.
- Human Resources does not consult or work with any outside organizations or groups that assist people with disabilities.
- The City, including Human Resources, does not have any policies that exclude service animals.

Notice Requirements

- The City, including Human Resources, has a nondiscrimination statement that includes persons with disabilities.
- A nondiscrimination statement and information about how to reach the ADA/Section 504 Coordinator are included in Human Resources recruitment flyers.
- Human Resources will notify all persons that meetings, hearings, interviews, and conferences will be held in accessible locations and that adaptive/auxiliary aids (such as assistive listening devices, readers for the blind, pen and paper) will be provided, upon request, to participants with disabilities.
- Human Resources has a procedure for filing a disability discrimination complaint and will notify all members of the public on how and with whom to file such a complaint. Notifications are listed on recruitment flyers.

Printed Information

- Human Resources produces and manages printed materials.
- The content of documents and publications is available in simple, easy-to-understand language for individuals with learning disabilities.

Website

- Human Resources has a page on the City's website.
- Human Resources provides information about job descriptions, salary information, benefits, and memorandums of understanding.
- Information regarding Human Resources facilities, programs, and services are created and managed by the office and in collaboration with other employees.

Public Telephones and Communication Devices

- Human Resources staff have been trained on communication by telephone with persons with hearing or speech impairments using a 711 operator.

Training and Staffing

- Human Resources staff have contact with the public.
- Human Resources informs staff of their obligations and policies that enable persons with disabilities to participate in services through training, webinars, and publications.

- Human Resources does not provide emergency services.
- There are no limitations or ratios for the number of people with disabilities who may participate in or be admitted to any department program.
- Human Resources uses minimum qualifications and requirements described in job announcements for employment criteria.
- There are no forms required for admission to programs.
- Human Resources requires interviews for employment.

Public Meetings

- Human Resources holds public meetings for recruitment testing.
- Human Resources meetings are held in accessible locations.
- Human Resources does not provide American Sign Language interpreters, readers, or adaptive equipment when requested for meetings, interviews, and conferences.
- Human Resources does not use consultants to conduct programs on its behalf.

Transportation Services

- Human Resources does not provide transportation to its programs.

Tours and Trips

- Human Resources does not provide tours and trips to the public.

Facilities

- City Hall
- Carnegie Forum

Internal Services Department – Information Technology

Description of Programs and Services

The Information Technology (IT) division IT supports key management information systems through the development and maintenance of the organization-wide network, daily desktop and office software support, systems training, web development, software updates, and equipment replacement. This division is responsible for developing a long-term technology plan for the City with a focus on mission-critical applications.

Customer Service

- There are no circumstances in which a person with a disability would be asked to pay a fee or meet any other requirement not imposed on other program participants.
- IT does not have any policies that exclude service animals.

Notice Requirements

- The City, including IT, has a nondiscrimination statement that includes information about how to reach the ADA/Section 504 Coordinator.

Television and Audiovisual Public Information

- IT produces televised presentations of City Council meetings.
- IT does not provide alternative formats to the audiovisual presentations.

Training and Staffing

- IT staff do not have contact with the public.

Parks, Recreation and Cultural Services (PRCS) Department

Description of Programs and Services

The Parks, Recreation and Cultural Services (PRCS) Department operates and maintains parks and Hutchins Street Square. It also provides and coordinates recreational and cultural activities through the following three divisions:

- Parks
    - Maintenance and operation of a variety of city parks and sports fields.
- Recreation/Facilities
    - Management and operation of a variety of both youth and adult recreational and sports programs.
- Hutchins Street Square
    - Maintenance and operation of the Hutchins Street Square facility as a local event and community center.

Accessible/Adaptive Equipment

- Assistive listening devices are made available for events/activities at Hutchins Street Square.
- Adjustable tables accommodate all age levels. Paper and pens are provided.

Customer Service

- Some PRCS staff are not aware of a policy or procedure that allows them to make reasonable accommodations to standard operating procedures for participants and their attendants.
- PRCS does not track accessibility requests.
- There are no circumstances in which a person with a disability would be asked to pay a fee or meet any other requirement not imposed on other program participants.
- The City, including PRCS, does not have any policies that exclude service animals.

Notice Requirements

- PRCS has a nondiscrimination statement that includes persons with disabilities for employment application purposes.

Printed Information

- PRCS produces printed materials.

- PRCS will make printed materials available in alternative formats when requested.

Television and Audiovisual Public Information

- PRCS makes audio recordings of its meetings.
- PRCS will provide alternative formats to audio presentations.

Website

- PRCS has a page on the City's website. The web page is managed by PRCS staff.
- PRCS provides information about classes, events, and programs.
- PRCS provides information about facility amenities and access.

Public Telephones and Communication Devices

- PRCS staff have not received training on communication by telephone with persons with hearing or speech impairments with the assistance of a 711 operator.

Training and Staffing

- PRCS staff have contact with the public.
- PRCS has not informed department staff of their obligation and policies that enable persons with disabilities to participate in services.
- PRCS staff have not been trained on interacting with people with disabilities.

Public Meetings

- PRCS holds public meetings in accessible locations.

Transportation Services

- PRCS provides transportation services.
- PRCS does not provide wheelchair-accessible transportation for people who need it to participate in the department's programs/activities.

Special Events and Private Events on Public Properties

- PRCS organizes special annual events on City property including summer concerts, fun runs, and the Easter egg hunt.
- PRCS ensures that these events are accessible to people with disabilities.

Parks/Facilities

- Beckman Park
- Blakely Park
- Candy Cane Park
- Century Meadows Park
- Century Park
- Chapman Field/Armory Park
- DeBenedetti Park
- Emerson Park

- English Oaks Commons
- Glaves Park
- Grape Bowl
- Hale Park
- Katzakian Park
- Kofu Park
- Lawrence Park
- Legion Park
- Lodi Lake Park
- Maple Square Park
- Peterson Park
- Pixley Park
- Roget Park
- Rosegate Park
- Salas Park
- Softball Complex
- Van Buskirk Park
- Vinewood Park
- Zupo Park

Additional program locations:

- Hutchins Street Square
- City Hall Annex

Police Department

Description of Programs and Services

The Police Department provides law enforcement and public safety services to the Lodi community. It is responsible for the protection of life and property, the maintenance of order, the control and prevention of crime, and the enforcement of motor vehicle laws and regulations. Primary activities related to these responsibilities include enforcement of the laws of the state and the city, investigation of crimes, apprehension of criminals, and maintenance of a crime prevention program.

Customer Service

- The Police Department has no policies or practices that could have the direct or indirect effect of excluding or limiting the participation of individuals with disabilities.
- The Police Department does not track accessibility requests.
- There are no circumstances in which a person with a disability would be asked to pay a fee or meet any other requirement not imposed on other program participants.
- The Police Department does not consult or work with any outside organizations that assist people with disabilities.

- The Police Department does not have any policies that exclude service animals.

Printed Information

- The Police Department produces printed materials.
- The Police Department does not provide alternative formats of printed materials.

Website

- The Police Department has a page on the City's website.
- The Police Department web page has general law enforcement information and statistics.

Public Telephones and Communication Devices

- The Police Department communicates by telephone with persons with a hearing or speech impairment using accessible technology.
- Police Department dispatch is trained in how to use accessible technology to communicate with a person with a hearing or speech impairment.

Training and Staffing

- Police Department staff have contact with the public.
- The public is informed on an individual basis about the department's obligation and policies that enable a person with disabilities to participate in Police Department programs.
- Police Department staff are trained regarding their obligation and policies that enable persons with disabilities to participate in programs and activities.
- The Police Department provides emergency services.

Public Meetings

- The Police Department holds public meetings.
- Public meetings, hearings, and conferences are held in accessible locations.

Public Transportation

- The Police Department does provide public transportation.

Special Events and Private Events on Public Properties

- The Police Department provides public safety services for special events on City properties.

Facilities

- Lodi Police Station

Public Works Department

The Public Works Department includes the following divisions:

- Administration/Engineering
    - Planning, design, and oversight in the construction of City streets, water, wastewater, and drainage. Other functions include construction drawing and records management,

mapping and Geographic Information System maintenance and development, surveying, and cost estimating.

  - Also included under this division is Traffic Engineering, which is responsible for the design of the City's traffic control systems, preparing traffic studies/reports on pedestrian crossings, school crossings, parking and restricted parking zones, speed zones, and installation of stop and yield signs and traffic signals.

- Transit
  - The Transit Division provides a daily fixed-route bus system (GrapeLine) within the city limits, ADA paratransit service (VineLine), and a door-to-door Dial-A-Ride (DAR) service for the general public (including discounted fares for seniors/disabled/Medicare recipients) within the city limits and in immediately adjacent areas. Nearly all of this activity is performed by contracted services.

- Municipal Utilities
  - Water Services – Provides potable water to residential, commercial, and industrial customers, and provides water for adequate pressures to fire hydrants, private fire suppression systems, and private on-site hydrants. Manages all wastewater including domestic industrial and runoff flows from the City's three separate collection systems. Performs pipeline and facility maintenance.
  - Wastewater Treatment – Operation and maintenance of the White Slough Water Pollution Control Facility, which operates 7 days per week, 24 hours per day, and is staffed 16 hours per day. Analyzes untreated and treated wastewater; determines chemical, physical, and bacteriological characteristics; and analyzes City drinking water.
  - Water Treatment – Operation of the Surface Water Treatment Facility located west of Lodi Lake. Provides potable water to residential, commercial, and industrial customers in conjunction with 28 groundwater wells. In addition, the facility also monitors distribution system pressure, including fire flows, 14 stormwater lift stations, and 9 sewer lift stations. The facility is maintained, operated, and monitored 7 days a week, 24 hours per day.

Customer Service

- Public Works tracks accessibility requests.
- There are no circumstances in which a person with a disability would be asked to pay a fee or meet any other requirement not imposed on other program participants.
- The City, including Public Works, does not have any policies that exclude service animals.
- The City, including Public Works, has a nondiscrimination statement that includes persons with disabilities.
- The City, including Public Works, has procedures for making an accessibility complaint.

DRAFT

Notice Requirements

- Public Works has a nondiscrimination statement that includes persons with disabilities.
- Transit Division staff will notify all persons that meetings, hearings, interviews, and conferences will be held in accessible locations and that adaptive/auxiliary aids (such as assistive listening devices, readers for the blind, pen and paper) will be provided, upon request, to participants with disabilities.

Printed Information

- Public Works produces printed materials for the public.
- Public Works will enlarge documents upon request.

Website

- Public Works has a page on the City's website that includes City standard details, guidance specifications, information related to various engineering CIP projects, etc. The content is managed by both Public Works and other City staff.

Public Telephones and Communication Devices

- Public Works staff have not been trained on communication by telephone with persons with hearing or speech impairments using a 711 operator.

Public Meetings

- Public Works holds public meetings in accessible locations.
- Public Works does not provide American Sign Language interpreters, but would send a request to the ADA/Section 504 Coordinator if one is requested.

Television and Audiovisual Public Information

- Public Works does not prepare audiovisual presentations via web streaming to the public.

Training and Staffing

- Public Works staff have contact with the public.
- Most Public Works staff have not received training on interacting with people with disabilities.

Transportation Services

- Public Works provides transportation to the public, through contracted services with MV Transportation.

Facilities

- City Hall
- Municipal Service Center
- Transit Station
- Water Treatment Facility
- White Slough Waste Treatment Facility

DRAFT

SECTION 3 –TRANSITION PLAN

Title II of the ADA requires that public entities having responsibility for or authority over facilities, streets, roads, sidewalks, and/or other areas meant for public use develop a Transition Plan so that their facilities meet the standards for program accessibility. Program accessibility means that a program, activity, and/or service are accessible when viewed in its entirety. Simply put, a Transition Plan transitions inaccessible facilities into environments that are accessible to and functional for individuals with disabilities.

This Transition Plan combines the findings of the facility surveys, public rights-of-way surveys, policy assessments, and program evaluations. Specific policy and program recommendations can be found in Section 2. The specific architectural modifications required to make programs accessible are listed in the City of Lodi—Facility Reports (please see Appendix C). Each facility report contains a complete list of architectural barriers and barrier removal actions. Not all of these barriers must be removed in order to facilitate program access. The first priority is to remove those barriers limiting access to programs.

This Transition Plan is divided into two parts: facilities, which include buildings, parks, and their related grounds; and public pedestrian rights-of-way, which include sidewalks and curb ramps in front of City-owned facilities and public schools, as well as downtown parking lots.

In compliance with the requirements of the ADA, the City will maintain in working order equipment and features that are required to provide access to individuals with disabilities.

Appendix C provides a list of the facilities that the City plans to improve with list of anticipated improvements, timeline, and cost.

3.1 Facilities

A. Program Barrier Removal Priorities

Each of these criteria is deemed by the City to have equal importance, with no single criteria having priority over another:

- Level of use by the public: Does the facilities receive a high level of public use?
- Program uniqueness: Some programs are unique to a building, facility, or park and cannot occur at another location.
- Geographic distribution: By selecting a range of facilities that are distributed throughout Lodi, the City can ensure maximum access for all residents.
- Citizen rights: Facilities where services are provided to exercise citizen rights—voting, right to a trial, access to elected officials, etc.
- Citizen responsibilities: Facilities where taxes are paid, permits and licenses are obtained, and services are obtained.
- Social need: Facilities that meet social needs such as homeless shelters, health clinics, etc.
- Identified complaints: Efforts should focus on identified accessibility complaints.

B. Prioritizing Access to Programs, Activities, and Services

City staff from each department listed the programs, activities, and services provided to the public and locations where the programs are offered. Each program was evaluated using the criteria listed above.

C. Priorities for Barrier Removal within Facilities

The following guidelines will assist the City to prioritize barriers found in City facilities:

1. Priority One: The highest priority is placed on those barrier removal items that provide accessibility at the main entrance of a facility or improve a path of travel to the portion of the facility where program activities take place.

   Examples:

   - Connection to the public right-of-way
   - Parking and passenger loading
   - Entrance walks
   - Entrance ramps
   - Entrance stairs
   - Entrance doors

2. Priority Two: A second level priority is placed on those barrier removal items that improve or enhance access to program use areas. Examples:

   - Transaction counters
   - Conference and meeting rooms
   - Public offices
   - Recreation environments/features
   - Public restrooms

3. Priority Three: A third level priority is placed on those barrier removal items that improve access to amenities serving program areas. Examples:

   - Drinking fountains
   - Public telephones
   - Vending machines

4. Priority Four: A fourth level of priority is assigned to areas or features that are not required to be modified because there are no public programs located in the facility or a portion of the facility, or because there are other locations that provide access to the program.

DRAFT

D. Transition Plan for Facilities

The Transition Plan for the removal of architectural barriers to program access must contain the following information:

- Identification of the barriers to program access
- Identification of the specific barrier removal action(s)
- Identification of a schedule for barrier removal
- Identification of responsibility for ensuring barrier removal

The facility reports appended to this document identify the barriers and the specific barrier removal actions. The City will accomplish barrier removals based on two strategies: (1) policy and procedure modifications to remove programmatic barriers; and (2) construction projects to remove architectural barriers.

The City of Lodi's ADA/Section 504 Coordinator is responsible for ensuring both programmatic and architectural barrier removal.

E. Phasing Schedule for Facilities

Barriers in City facilities will be removed systematically, citywide, based on established program priorities. It is the City's intent to address and remove barriers to accessibility in public buildings and parks based on the immediate necessity of programmatic access, degree of complexity, and overall cost.

The City of Lodi reserves the right to modify barrier removal priorities to allow flexibility in accommodating community requests, petitions for reasonable modifications from persons with disabilities, changes in City programs, and funding opportunities and constraints. It is the goal of this Transition Plan to facilitate access to the programs, activities, and services provided by the City. Interim measures will be explored and implemented in order to provide programmatic access to the public pending the implementation of physical barrier removal projects.

The following tables describe the priorities and schedule for barrier removal in public facilities owned by the City of Lodi. This preliminary schedule represents a 15-year plan for barrier removal. It is the City's intent to review all barriers during the first year of the implementation of this plan and to address those barriers that can be resolved through programmatic modifications. The City will then revise the following schedule for the removal of the remaining barriers.

DRAFT

Barrier Removal Schedule for City-Owned Facilities

Time Frame	City Parks	Total Estimated Cost
1–3 Years	• Blakely Park (Approach & Entrance) • Blakely Park (Toilet Rooms) • Century Meadows Park (Approach & Entrance) • DeBenedetti Park (Approach & Entrance) • Grape Bowl – ADA Parking (Approach & Entrance) • Grape Bowl (Access to Goods & Services) • Kofu Park (Approach & Entrance) • Kofu Park (Access to Goods & Services) • Roget Park (Additional Access) • Zupo Field Park (Approach & Access) • Zupo Field Park (Access to Goods & Services)	$661,000
4–6 Years	• Blakely Park (Access to Goods & Services) • Blakely Park (Additional Access) • Chapman Field/Armory Park (Approach & Entrance) • Chapman Field/Armory Park (Access to Goods & Services) • Chapman Field/Armory Park (Toilet Rooms) • Chapman Field/Armory Park (Additional Access) • Emerson Park (Approach & Entrance) • Emerson Park (Toilet Rooms) • Emerson Park (Additional Access) • Hale Park (Approach & Entrance) • Hale Park (Access to Goods & Services) • Hale Park (Toilet Rooms) • Hale Park (Additional Access) • Katzakian Park (Approach & Entrance) • Katzakian Park (Toilet Rooms) • Kofu Park (Additional Access) • Kofu Park (Toilet Rooms) • Legion Park (Approach & Entrance) • Legion Park (Access to Goods & Services)	$925,000

DRAFT

Time Frame	City Parks	Total Estimated Cost
	• Legion Park (Toilet Rooms) • Lodi Lake Park (Approach & Entrance) • Lodi Lake Park (Toilet Rooms) • Lodi Lake Park (Access to Goods & Services) • Roget Park (Access to Goods & Services) • Salas Park (Approach & Entrance) • Salas Park (Access to Goods & Services) • Salas Park (Toilet Rooms) • Salas Park (Additional Access) • Softball Complex (Approach & Entrance) • Softball Complex (Access to Goods & Services) • Softball Complex (Toilet Rooms) • Softball Complex (Additional Access) • Zupo Field Park (Toilet Rooms)	
7–9 Years	• Beckman Park (Approach & Entrance) • Beckman Park (Toilet Rooms) • Candy Cane Park (Approach & Access) • Henry Glaves Park (Toilet Rooms) • Peterson Park (Approach & Entrance) • Peterson Park (Toilet Rooms) • Peterson Park (Access to Goods & Services) • Van Buskirk Park (Access to Goods & Services) • Vinewood Park (Approach & Entrance)	$74,000
10–12 Years	• Century Meadows (Approach & Entrance) • English Oaks Commons (Approach & Entrance) • Vinewood Park (Toilet Rooms) • Vinewood Park (Additional Access)	$75,000
Total Estimated Cost		**$1,735,000**

DRAFT

Time Frame	Civic Center	Total Estimated Cost
1–3 Years	• Carnegie Forum (Approach & Entrance) • Carnegie Forum (Access to Goods & Services)	$50,000
4–6 Years		
7–9 Years		
10–12 Years		
Total Estimated Cost		**$50,000**

Time Frame	Public/City Buildings	Total Estimated Cost
1–3 Years	• Hutchins Street Square – North Entrance (Approach & Entrance) • Hutchins Street Square (Access to Goods & Services) • Hutchins Street Square (Toilet Rooms) • Hutchins Street Square (Additional Access) • Lodi Animal Shelter Facility (Approach & Entrance) • Lodi Parks Administration Office (Approach & Entrance) • Lodi Parks Administration Office (Access to Goods & Services) • Lodi Parks Administration Office (Toilet Rooms) • Lodi Library (Approach & Entrance) • Lodi Library (Toilet Rooms) • Municipal Service Center (Approach & Entrance)	$475,000
4–6 Years	• Lodi Animal Shelter (Access to Services) • Lodi Animal Shelter (Toilet Rooms) • Lodi Library (Access to Goods & Services) • Municipal Service Center (Access to Goods & Services) • Municipal Service Center (Toilet Rooms) • Municipal Service Center (Additional Access)	$155,000

DRAFT

7–9 Years	• White Slough (Approach & Entrance) • White Slough (Access to Goods & Services) • White Slough (Toilet Rooms)	$20,000
10–12 Years		
Total Estimated Cost		**$650,000**

Time Frame	Privately Operated Facilities Owned by the City	Total Estimated Cost
1–3 Years		
4–6 Years	• CrossFit Gym (Approach & Entrance) • CrossFit Gym (Toilet Rooms)	$20,000
7–9 Years	• Mojica's Batting Cages (Approach & Entrance) • Mojica's Batting Cages (Access to Goods & Services) • Mojica's Batting Cages (Toilet Rooms)	$30,000
10–12 Years		
Total Estimated Cost		**$50,000**

DRAFT

3.2 Pedestrian Rights-of-Way (PROW)

A. Overview of the PROW

The ADA addresses accessible pedestrian rights-of-way where sidewalks are provided by the City of Lodi. The ADA does not mandate the installation of sidewalks, but does require curb ramps at intersections where existing sidewalks are on both sides of the roadway. Most neighborhoods in the city have sidewalks.

Chapter 5, Transportation, in the City's General Plan includes recommendations on pedestrian improvements. The General Plan outlines the City's desire to provide safe and convenient pedestrian connections to and between downtown, other commercial districts, neighborhoods, and major activity centers in the city, as well as to surrounding jurisdictions.

B. Surveys of Existing PROW Conditions

For the ADA Transition Plan, the City used the existing survey list that included sidewalks and curb ramps associated with the PROW of City-owned facilities. Additionally, the study analyzed the designated accessible parking spaces in City-owned parking lots in the downtown area.

C. Pedestrian Rights-of-Way Prioritization

Under Title II of the ADA, the City is not necessarily required to construct curb ramps at every point where a sidewalk intersects a curb. Traffic safety considerations may make construction of ramps undesirable at some locations. Alternative routes to buildings that make use of existing curb ramps may be acceptable under the concept of program accessibility in the limited circumstances where individuals with disabilities need only travel a marginally longer route. In addition, the undue financial or administrative burden limitation recognized by Title II may limit the number of curb ramps that the City is required to provide.

The City will prioritize PROW projects at the following locations, in the order listed:

1. Government offices and facilities
2. Bus stops and transportation facilities
3. Places of public accommodation such as commercial and business areas
4. Facilities containing employers
5. Other areas such as residential neighborhoods and underdeveloped regions of the city

Additional criteria for prioritization may be developed for replacing existing curb ramps. For example:

- Repair of hazardous conditions
- Distance from a City-operated program or building
- Distance from a bus stop
- Proximity to a facility serving disabled clients
- Level of pedestrian traffic

- Lack of feasible alternate routes
- Distance from non-City-owned public facilities

D. Time Period for Pedestrian Rights-of-Way Improvements

The City should establish a 15-year time frame to remove PROW barriers that limit program accessibility. Funding improvements for pedestrian facilities is costly and competitive for state and federal funding sources. Pedestrian improvements are often paired with other roadway improvements, Safe Routes to School projects, and Capital Improvement Projects. The ADA Title II regulations state that if a transition plan will take more than one year to fully implement, it must contain interim steps that will be undertaken to provide program accessibility.

Facility	Estimated Cost
Downtown Parking Lots	$90,000
PROW Adjacent to City Facilities and Public Schools	$600,000
Total	$690,000

E. PROW Construction Details

The City of Lodi's standard construction details are available on the City's website:

http://www.lodi.gov/public_works/std/stdplans.html

The plans and specifications are consistent with state and federal accessibility requirements.

F. Accessibility During Construction

The City ensures that an accessible path of travel is available during construction.

Large City Projects: The engineer or architect who designs the project describes the project conditions and includes in the design a construction detour plan for vehicles and pedestrians. Modifications may be requested by the contractor and are reviewed for accessibility before approval by the project engineer.

Large Private Projects: City Engineering conditionally approves the project before a building permit is issued and requires that the contractor develop and submit for Engineering approval a detour plan for pedestrians, emergency vehicles, and traffic if necessary.

G. Street or Sidewalk Closure for Special Events

When there is special event that requires street or sidewalk closure, an encroachment permit is required. The applicant is then responsible to ensure accessibility at the event. The City also has an outdoor display program for downtown merchants. To participate in this program, the vendor must acquire a permit. The permit includes specific instructions for providing pedestrian passway and other clearances related to complying with the ADA in the pedestrian rights-of-way.

H. Citizen Request Process

See Section 4 for the City's formal grievance procedure.

I. Street-Related Capital Improvement Projects

The City engages in annual maintenance efforts to repair cracked or heaved sidewalks and to address sidewalk improvements based on citizen requests and/or needs at specific locations as budget allows. Street overlay and street reconstruction projects include repair of sidewalks and construction of ADA-compliant curb ramps. Other CIP projects with ADA components are completed every year, and there is a requirement for developers to install ADA-compliant driveways, sidewalks, and curb ramps through conditions of approval. Additionally, the City has an annual concrete maintenance program that focuses on the installation of high priority sidewalks along school routes and in other areas. The program includes methods such as grinding to help mitigate trip hazards, as well as replacing damaged sidewalks.

Some recently completed ADA PROW projects are listed below by year of completion.

2013:

- Church Street Parking Lot ADA Improvements
- HSS South Entrance ADA
- Kofu Park ADA Improvements
- HSS Pool Chair Lift
- City Hall Annex ADA
- Mills Avenue Overlay (included 4 ADA ramps)
- Multimodal Station Concrete Pavement (3 ramps, crosswalk)
- City Hall Parking Lot Reconstruction (4 ADA parking stalls, 2 ADA-compliant driveways, ramp, path of travel improvements)
- Softball Complex & Salas Park (12 ADA stalls, 4 ramps, path of travel improvements)
- DeBenedetti Park ADA Access Improvement Project (2 ADA stalls, 2 ramps, 2 paths of travel to the bottom of the basin)
- Alley Improvement Project – Phase 4 (4 accessible alley approaches/ramps)
- 2013–2015 Sidewalk Repair Program (1 ADA alley approach, 1 ramp in 2013)
- Ham Lane Overlay (26 ADA ramps, 3 ADA driveways)
- Stockton Street Off-Site Improvements (1 ADA ramp, 1 ADA driveway, path of travel improvements)
- Kofu Park Parking Lot Improvement (2 ADA stalls, accessible driveway)

2014:

- Hutchins Street Square North Entrance ADA, Phase 1
- Cherokee Lane ADA Improvements Phase 1
- Church Street Parking Lot ADA Improvements Phase 2
- Kofu Park ADA Improvements
- 2013–2015 Sidewalk Repair Program (6 ramps in 2014)
- Sacramento Street – Streetscape Project (13 ADA ramps)
- Fire Station 3 Parking Lot Improvements (1 ADA stall, 1 ADA driveway)
- ADA Improvements Phase 3 – Church Street Parking Lot (3 ADA stalls, path of travel improvements)
- Hutchins Street Square – South Entrance ADA (10 ADA stalls, 2 ramps)
- Lodi Lake Park – Youth Area Pathway Improvements (ADA path of travel improvements)
- White Slough – Control Building Remodel/Additional Project (2 ADA stalls, ADA bathroom improvements)

2015:

- 2015 Grapeline Bus Stop Accessibility and Shelter Improvements (10 ADA ramps, 2 ADA alley approaches, path of travel improvements)
- Transit Station Restroom (accessible bathrooms, ADA restrooms)
- 2015–2017 Sidewalk Repair Program (10 ramps in 2015)

2016:

- Lawrence Avenue ADA Parking
- 2015–2017 Sidewalk Repair Program (5 ramps in 2016)
- Lodi Lake Boat Ramp Replacement (4 ADA stalls, 3 ramps, path of travel improvements)
- Alley Improvement Project – Phase 5 (2 ADA alley approaches)
- Kofu Park – West Parking Lot ADA Improvements (2 ADA stalls)
- 2016 Grapeline Bus Stop Accessibility and Shelter Improvements (16 ramps)
- 2016 Cherokee Lane Accessibility Improvements (10 ramps, path of travel improvements)

2017 (in progress):

- Grace and Mercy ADA Accessibility Improvements
- City Hall/Carnegie Forum ADA Improvements
- Public Counter ADA Improvements
- Hutchins Street Square North Entrance ADA Improvements (2 ADA stalls, ramp, path of travel improvements)
- Lawrence Avenue Accessibility Parking (4 ADA stalls)
- 2017 Grapeline Bus Stop Accessibility and Shelter Improvements (16 ramps, path of travel improvements)
- 2017 DeBenedetti Park Trail and Parking Lot Improvements (4 ADA stalls, path of travel improvements)
- 2017–2019 Sidewalk and Miscellaneous Concrete Repair (5 ramps in 2017)

SECTION 4 – ADA POLICY AND COMPLAINT PROCEDURE

ADA Grievance Procedure

If a public entity has 50 or more employees, it is required to designate at least one responsible employee to coordinate ADA compliance. The City of Lodi has designated the Public Works Director as its primary ADA/Section 504 Coordinator. The ADA/Section 504 Coordinator is responsible for coordinating the City's efforts to comply with Title II and for investigating any complaints that the City has violated Title II of the ADA. The ADA/Section 504 Coordinator is also responsible for coordinating the City's efforts to comply with Title 24 and all other applicable state and federal physical and program accessibility requirements.

All complaints or grievances submitted to the City of Lodi must be in writing on the designated form and contain specific information about the alleged violation or discrimination, including name; address; telephone number of the complainant; and the location, date, and a complete description of the problem. Anonymous complaints or grievances will not be accepted. Complaints or grievances will be kept confidential to the greatest extent possible, unless ordered released by a court of competent jurisdiction (see California Evidence Code Section 1040). Alternative means of filing complaints or grievances may be accepted at the discretion of the ADA/Section 504 Coordinator. These may be

submitted by telephone, email (confidentiality cannot be assured), letter, personal interview, or tape recording, upon request. However, all complaints or grievances must include all the required information consistent with the format of the official complaint form. See Appendix E.

All complaints must be submitted by the complainant or his/her designee to the ADA/Section 504 Coordinator at the below location or, upon approval of a request to submit via an alternative method, by telephone at (209) 333-6706 (voice) or via online submission at http://www.lodi.gov/accessibility.html.

Complaints should be submitted as soon as possible, but no later than 60 calendar days after the date of the alleged violation or discriminatory act.

City of Lodi
ADA/Section 504 Coordinator
PO Box 3006
221 W. Pine Street
Lodi, CA 95241

Within 15 calendar days after receipt of the complaint, the ADA/Section 504 Coordinator or Title VI Coordinator (as deemed appropriate) or his/her designee will contact the complainant to discuss the complaint and the possible resolutions.

Within 15 calendar days after that discussion, the ADA/Section 504 Coordinator or Title VI Coordinator (as deemed appropriate) or his/her designee will respond in writing, and where appropriate, in an accessible format, such as large print, Braille, or audiotape. The response will explain the position of the City of Lodi and offer options for substantive resolution of the complaint.

If the response by the ADA/Section 504 Coordinator or Title VI Coordinator (as deemed appropriate) or his/her designee does not satisfactorily resolve the issue, the complainant and/or their designee may appeal the decision to the City Manager within 15 calendar days after receipt of the coordinator's or his/her designee's response.

Within 15 calendar days after receipt of the appeal, the City Manager or his/her designee will meet with the complainant/appellant to discuss the complaint and possible resolutions. Within 15 calendar days after the meeting, the City Manager or his/her designee will respond in writing, and, where appropriate, in a format accessible to the complainant, with a final resolution of the complaint.

All written complaints received by the ADA/Section 504 Coordinator or Title VI Coordinator (as deemed appropriate) or his/her designee, appeals to the City Manager or his/her designee, and responses from these two offices will be retained by the City of Lodi for at least three years.

If any Title 24 Building Code or ADA complaint or grievance is under the jurisdiction of another public entity, the complainant will be notified that the City of Lodi lacks jurisdiction and will be referred to the appropriate jurisdiction.

SECTION 5 – DEFINITIONS

The following is a summary of many definitions found in the ADA. Please refer to the Americans with Disabilities Act for the full text of definitions and explanations (http://www.ada.gov/).

5.1 Auxiliary Aids and Services

The term *auxiliary aids and services* includes:

1. Qualified interpreters or other effective methods of making orally delivered materials available to individuals with hearing impairments;
2. Qualified readers, taped texts, or other effective methods of making visually delivered materials available to individuals with visual impairments; and
3. Acquisition or modification of equipment or devices; and
4. Other similar services and actions as allowed under the ADA.

5.2 Complaint

A *complaint* is a claimed violation of the ADA.

5.3 Disability

The term *disability* means, with respect to an individual:

1. A physical or mental impairment that substantially limits one or more of the major life activities of such individual;
2. A record of such impairment; or
3. Being regarded as having such impairment.

5.4 Discrimination on the Basis of Disability

Discrimination on the basis of disability means to:

- Limit, segregate, or classify a citizen in a way that may adversely affect opportunities or status because of the person's disability;
- Limit, segregate, or classify a participant in a program or activity offered to the public in a way that may adversely affect opportunities or status because of the participant's disability;
- Participate in a contract that could subject a qualified citizen with a disability to discrimination;
- Use any standards, criteria, or methods of administration that have the effect of discriminating on the basis of disability;
- Deny equal benefits because of a disability;
- Fail to make reasonable accommodations to known physical or mental limitations of an otherwise qualified individual unless it can be shown that the accommodation would impose an undue burden on the City's operations;
- Use selection criteria that exclude otherwise qualified people with disabilities from participating in the programs or activities offered to the public; and

- Fail to use tests, including eligibility tests, in a manner that ensures that the test results accurately reflect the qualified applicant's skills or aptitude to participate in a program or activity.

5.5 Having a Record of Impairment

An individual is disabled if he or she has a history of having an impairment that substantially limits the performance of a major life activity or has been diagnosed, correctly or incorrectly, as having such impairment.

5.6 Physical or Mental Impairments

Physical or mental impairments may include, but are not limited to, vision, speech, and hearing impairments; emotional disturbance and mental illness; seizure disorders; mental retardation; orthopedic and neuromotor disabilities; learning disabilities; diabetes; heart disease; nervous conditions; cancer; asthma; Hepatitis B; HIV infection (HIV condition); and drug addiction if the addict has successfully completed or is participating in a rehabilitation program and no longer uses illegal drugs.

The following conditions are not physical or mental impairments: transvestitism; illegal drug use; homosexuality or bisexuality; compulsive gambling; kleptomania; pyromania; pedophilia; exhibitionism; voyeurism; pregnancy; height; weight; eye color; hair color; left-handedness; poverty; lack of education; a prison record; and poor judgment or quick temper if not symptoms of a mental or physiological disorder.

5.7 Qualified Individual with a Disability

The term *qualified individual with a disability* means an individual with a disability who, with or without reasonable modification to rules, policies, or practices; the removal of architectural, communication, or transportation barriers; or the provision of auxiliary aids and services, meets the essential eligibility requirements for the receipt of services or the participation in programs or activities provided by the City.

5.8 Reasonable Program Modifications

If the individual's disabilities prevent him or her from performing the essential functions of the program or activity, it is necessary to determine whether reasonable program modifications would enable an individual to perform the essential functions of the program or activity.

Reasonable program modification is any change in program or activity or in the way things are customarily done that enables an individual with a disability to enjoy equal program opportunities. Accommodation means modifications or adjustments:

1. To a registration or application process to enable an individual with a disability to be considered for the program or activity;

2. To the program or activity environment in which the duties of a position are performed so that a person with a disability can perform the essential functions of the program or activity; and
3. That enables individuals with disabilities to enjoy equally the benefits of the program or activity as other similarly situated individuals without disabilities enjoy.

Modification includes making existing facilities and equipment used by individuals readily accessible and usable by individuals with disabilities.

Modification applies to:

- All decisions and to the application or registration process;
- All services provided in connection with the program or activity; and
- Known disabilities only.

Modification is not required if:

- It changes the essential nature of a program or activity of the person with a disability;
- It creates a hazardous situation;
- Adjustments or modifications requested are primarily for the personal benefit of the individual with a disability; or
- It poses an undue burden on the City.

5.9 Regarded as Having a Disability

An individual is disabled if she or he is treated or perceived as having an impairment that substantially limits major life activities, although no such impairment exists.

5.10 Substantial Limitations of Major Life Activities

An individual is disabled if she or he has a physical or mental impairment that (a) renders her or him unable to perform a major life activity, or (b) substantially limits the condition, manner, or duration under which she or he can perform a particular major life activity in comparison to other people.

Major life activities are functions such as caring for oneself, performing manual tasks, walking, seeing, hearing, speaking, breathing, learning, and working.

In determining whether physical or mental impairment substantially limits the condition, manner, or duration under which an individual can perform a particular major life activity in comparison to other people, the following factors shall be considered:

1. The nature and severity of the impairment;
2. The duration or expected duration of the impairment; and
3. The permanent or long-term impact (or expected impact) of or resulting from the impairment.

5.11 Undue Burden

The City of Lodi shall not provide an accommodation that imposes an undue burden on the operation of the City's business.

The term *undue burden* means significant difficulty or expense incurred in the provision of accommodation. Undue burden includes, but is not limited to, financial difficulty. Undue burden refers to any modification that would be unduly costly, extensive, substantial, or disruptive, or that would fundamentally alter the nature of operation of the business of the City.

Whether a particular accommodation will impose an undue hardship is determined on a case-by-case basis. If a particular modification is determined to cause an undue burden to the City of Lodi, the City will attempt to identify another modification that would not pose such a burden. If cost causes the undue burden, the City must consider whether funding for the modification is available from an outside source. If no such funding is available, the City must give the person with a disability the opportunity to provide the modification or to pay for that portion of the modification that constitutes an undue burden.

The following factors are considered in determining whether a program modification would create an undue burden: the nature and cost of the modification; the financial resources of the City available to make the modification; the impact the expense of the accommodation will have on the affected City operation; and the permanence of the alterations affecting the site.

SECTION 6 – PROGRAM ACCESSIBILITY GUIDELINES, STANDARDS, AND RESOURCES

6.1 Introduction

In order to facilitate access to all City programs and departments, the City will maintain these program accessibility guidelines, standards, and resources. This information is available to all employees and volunteers. The City will add to these guidelines when necessary to address its needs and include information and technological devices that help staff and volunteers communicate with individuals with a variety of disabilities. The City will periodically review the components of this section, as new technologies are developed, to ensure that the best types of modifications are included. This section also contains the accessibility standards of care that govern new construction and alterations to facilities.

Both state and federal regulations apply to accessible facilities. Described below are resources for both federal and State of California standards and regulations.

6.2 Federal Accessibility Standards and Regulations

US Department of Justice

The US Department of Justice provides many free ADA materials, including text of the Americans with Disability Act (ADA). Printed materials may be ordered by calling the ADA Information Line [(800) 514-0301 (Voice) or (800) 514-0383 (TTY)]. Publications are available in standard print as well as large print,

audiotape, Braille, and computer disk for people with disabilities. Documents, including the following publications, can also be downloaded from the Department of Justice website (http://www.ada.gov/).

- ADA Regulation for Title II: This publication describes Title II of the Americans with Disabilities Act, which prohibits discrimination on the basis of disability by public entities. Title II of the ADA protects qualified individuals with disabilities from discrimination on the basis of disability in the services, programs, or activities of all state and local governments. This rule adopts the general prohibitions of discrimination established under Section 504, as well as the requirements for making programs accessible to individuals with disabilities and for providing equally effective communications. It also sets forth standards for what constitutes discrimination on the basis of mental or physical disability, defines disability and qualified individual with a disability, and establishes a complaint mechanism for resolving allegations of discrimination.
- Title II Technical Assistance Manual (1993) and Yearly Supplements: This 56-page manual explains in lay terms what state and local governments must do to ensure that their services, programs, and activities are provided to the public in a nondiscriminatory manner. Many examples are included for practical guidance.
- Accessibility of State and Local Government Websites to People with Disabilities: The 5-page publication provides guidance on making state and local government websites accessible.
- ADA Information for Law Enforcement: This page contains compliance assistance materials to help state and local law enforcement officers understand how to interact with victims, witnesses, suspects, and others who have disabilities.

US Access Board Publications

The full texts of federal laws and regulations with guidelines for the design of accessible facilities and programs are available from the US Access Board. Single copies of publications are available free and can be downloaded or ordered by completing a form available on the Access Board's website (http://www.access-board.gov/). In addition to regular print, publications are available in large print, on disk or audiocassette, and in Braille.

Communications & IT

Access to information and communication technology (ICT) is addressed by Access Board standards and guidelines issued under Section 508 of the Rehabilitation Act and Section 255 of the Telecommunications Act.

- Section 508 Standards: http://www.access-board.gov/guidelines-and-standards/communications-and-it/about-the-section-508-standards
- Refresh of the Section 508 Standards and the Telecommunications Act Guidelines: http://www.access-board.gov/guidelines-and-standards/communications-and-it/about-the-ict-refresh
- Telecommunications Act Accessibility Guidelines : http://www.access-board.gov/guidelines-and-standards/communications-and-it/about-the-telecommunications-act-guidelines

Buildings & Sites

Standards issued under the ADA address access to buildings and sites nationwide in new construction and alterations.

- 2010 ADA Standards for Accessible Design: This document contains scoping and technical requirements for accessibility to buildings and facilities by individuals with disabilities under the ADA of 1990. These requirements are to be applied during the design, construction, and alteration of buildings and facilities covered by Titles II and III of the ADA to the extent required by regulations issued by federal agencies, including the US Department of Justice and the US Department of Transportation, under the ADA. This document must be used in conjunction with Title 24 of the California Building Code (see subsection 6.4, State of California Accessibility Standards and Regulations).
- 2010 ADA Standards: http://www.access-board.gov/guidelines-and-standards/buildings-and-sites/about-the-ada-standards

Recreation Facilities

Access to recreation facilities, including play areas, swimming pools, sports facilities, fishing piers, boating facilities, golf courses, and amusement rides, is addressed in the ADA and Architectural Barriers Act (ABA) standards. New provisions will cover access to trails, picnic and camping sites, and beach access routes.

- Recreation Facilities: http://www.access-board.gov/guidelines-and-standards/recreation-facilities/about-recreation-facilities
- Outdoor Developed Areas: http://www.access-board.gov/guidelines-and-standards/recreation-facilities/outdoor-developed-areas

Streets and Sidewalks

New guidelines the Access Board is developing will cover access to public rights-of-way, including sidewalks, intersections, street crossings, and on-street parking. The Access Board is also addressing access to shared use paths providing off-road means of transportation and recreation.

- Public Rights-of-Way: http://www.access-board.gov/guidelines-and-standards/streets-sidewalks/public-rights-of-way
- Shared Use Paths: http://www.access-board.gov/guidelines-and-standards/streets-sidewalks/shared-use-paths/about-this-rulemaking

6.3 Publications for Title II: US Department of Justice

Title II Technical Assistance Manual | Supplement

This 56-page manual explains in lay terms what state and local governments must do to ensure that their services, programs, and activities are provided to the public in a nondiscriminatory manner. (1993) http://www.ada.gov/taman2.html

The ADA and City Governments: Common Problems
The 9-page document contains a sampling of common problems shared by city governments of all sizes, provides examples of common deficiencies, and explains how these problems affect persons with disabilities. (2000) http://www.ada.gov/comprob.htm

ADA Guide for Small Towns
This 21-page guide presents an informal overview of some basic ADA requirements and provides cost-effective tips on how small towns can comply with the ADA. (2000) http://www.ada.gov/comprob.htm

Accessibility of State and Local Government Websites to People with Disabilities
The 5-page publication provides guidance on making state and local government websites accessible. (2003) http://www.ada.gov/websites2.htm

ADA Checklist for Polling Places
This 39-page checklist is a self-help survey that voting officials can use to determine whether a polling place has basic accessible features needed by most voters with disabilities. (2004) http://www.ada.gov/votingchecklist.htm

An ADA Guide for Local Governments: Making Community Emergency Preparedness and Response Programs Accessible to People with Disabilities
This 11-page illustrated publication provides guidance on preparing for and carrying out emergency response programs in a manner that results in the services being accessible to people with disabilities. (2006) http://www.ada.gov/emergencyprep.htm

Access for 9-1-1 and Telephone Emergency Services
The 10-page publication explains the requirements for direct, equal access to 9-1-1 for persons who use teletypewriters (TTYs). (1998) http://www.ada.gov/911ta.htm

Commonly Asked Questions About the ADA and Law Enforcement
This 12-page publication includes information for law enforcement agencies in a simple question and answer format. (2006) http://www.ada.gov/q&a_law.htm

Communicating with People Who Are Deaf or Hard of Hearing: ADA Guide for Law Enforcement Officers
This 8-panel pocket guide provides basic information for officers about ADA requirements for communicating effectively with people who are deaf or hard of hearing. (2006) http://www.ada.gov/lawenfcomm.htm

Model Policy for Law Enforcement on Communicating with People Who Are Deaf or Hard of Hearing
This 4-page document serves as a model for law enforcement agencies when adopting a policy on effective communication with people who are deaf or hard of hearing. Agencies are encouraged to download and adapt the policy to suit their needs. (2006) http://www.ada.gov/lawenfmodpolicy.htm

Questions and Answers: The ADA and Hiring Police Officers
The 5-page publication includes information on ADA requirements for interviewing and hiring police officers. (1997) http://www.ada.gov/copsq7a.htm

6.4 State of California Accessibility Standards and Regulations and Additional Resources

Title 24, California Building Code

The State of California has adopted a set of design guidelines for accessible facilities, which can be found in the California Code of Regulations, Title 24, Part II, California Building Code (CBC). The CBC contains general building design and construction requirements relating to fire and life safety, structural safety, and access compliance. CBC provisions establish minimum standards to safeguard life or limb, health, property, and public welfare by regulating and controlling the design, construction, quality of materials, use and occupancy, location, and maintenance of all buildings and structures and certain equipment. Although California has adopted most of the ADAAG requirements, there are some differences. In general, the more restrictive requirement (whether federal or state) should be applied when designing accessible facilities. The complete Title 24 or any of its parts is available for purchase from the International Code Council (ICC), 5360 Workman Mill Road, Whittier, CA 90601; (800) 423-6587, (http://www.iccsafe.org) or at various bookstores that carry technical books.

Since the CBC is updated every three years, the City should have an ongoing program of regularly reviewing these changes and updating City policies and procedures related to accessibility to keep them current.

Division of the State Architect

The Division of the State Architect (DSA) also has information and resources related to accessible or universal design. Publications available for downloading at DSA's website (http://www.dgs.ca.gov/dsa) include:

- DSA's 2011 California Access Compliance Reference Manual: The purpose of this book of regulations and statutes is to clarify the obligations for architectural accessibility in California.

For further technical assistance, contact DSA's Access Compliance Program at 1102 Q Street, Suite 5100, Sacramento, CA 95811; (916) 445-8100.

Resources for Providing Accessible Programs and Facilities

- ADA Document Portal: This website includes links to an ADA Collection consisting of more than 7,400 documents on a wide range of topics. The ADA Document Portal is supported by the ten ADA & IT Technical Assistance Centers (https://adata.org/ada-document-portal).

- American Alliance of Museums: Accessible exhibit design publications are available for purchase from the alliance's website, including Everyone's Welcome (available in a variety of formats), which addresses museum programs and the ADA; The Accessible Museum, which offers model programs of accessibility for older people and people with disabilities; and What Museum Guides Need to Know to provide access to blind and visually impaired visitors (http://www.aam-us.org).

- Beneficial Designs: Beneficial Designs works toward universal access through research, design, and education. Beneficial Designs develops assistive and adaptive technology, performs rehabilitation research, contract design, legal consultation, and standards development, and serves as a rehabilitation information resource. Contact Beneficial Designs, Inc., at 2240

Meridian Blvd., Suite C, Minden, NV 89423-8628; (775) 783-8822); (http://www.beneficialdesigns.com/).

- California State Parks Accessibility Guidelines: A state outdoor recreation resource (http://www.parks.ca.gov).
- DisabilityInfo.Gov: A one-stop interagency portal for information on federal programs, services, and resources for people with disabilities, their families, employers, service providers, and other community members.
- National Center on Accessibility (NCA): The center is a cooperative project between the National Park Service and Indiana University to provide information and technical assistance, primarily on recreation access. An example of NCA's research activities is the National Trails Surface Study. This study is primarily the result of questions that the center has received for many years and continues to receive from organizations, agencies, and individuals who desire to make their trails accessible, are interested in an unobtrusive surface that blends and is friendly to the environment, and provides a quality trail experience for people with and without disabilities. NCA also publishes "What Is an Accessible Trail?," which summarizes the federal guidelines for outdoor developed areas and is available for download from its website. The website also has information on campground accessibility, accessible picnic tables, access to beaches, and inclusion of people with disabilities in aquatic venues (http://www.ncaonline.org/).
- National Center on Physical Activity and Disability: The center provides information and resources on physical activity to help people with disabilities find ways to become more active and healthier. The center also has information on how to provide access to fitness centers, schools, recreation facilities, camps, and health and leisure services (http://www.ncpad.org/).
- Smithsonian Institution: The Accessibility Program has developed the Smithsonian Guidelines for Accessible Exhibition Design (1996), which are available for download from its website (http://accessible.si.edu). Further information is available from the Smithsonian Accessibility Program at the Arts and Industries Building, Room 1239 MRC 426, Washington, DC 20560; (202) 786-2942.

Resources for Assistive Technologies (General)

The City should utilize the many disability-related resources available through the Internet.

- AbleData: The National Institute on Disability and Rehabilitation Research of the US Department of Education maintains a national web-based service with up-to-date links to assistive technologies and disability-related resources (http://www.abledata.com/).
- California Assistive Technology System (CATS): CATS is a statewide project of the California Department of Rehabilitation that promotes access to assistive technologies, related services, and information to enable people with disabilities to be successful, independent, and productive. CATS maintain several directories on its website (http://www.atnet.org) including:
    - On-site and remote real-time captioning services
    - American Sign Language (ASL) interpreters

- Ergonomic office equipment vendors
- Augmentative and assistive communications manufacturers and vendors
- Organizations that provide low-cost and donated computers for organizations that provide services to people with disabilities
- Assistive technology vendors and service providers for the hard of hearing/deaf, learning disabled, mobility/physical/orthopedic, speech/language, and visually impaired/blind

Alternative Format Communications

Resources to produce standardized publications such as applications and registration forms in Braille, audiotape, large-print text, and accessible electronic media will be assembled. Information regarding Braille services and other accommodations for people with visual disabilities is available by contacting:

- American Council of the Blind (ACB): ACB (http://www.acb.org/) is a national organization advocating on behalf of persons who are blind or have low vision. ACB also publishes "A Guide to Making Documents Accessible to People Who Are Blind or Visually Impaired," which is available online, in regular print, large print, or Braille, or on cassette tape. ACB is located at 1155 15th St. NW, Suite 1004, Washington, DC 20005 and may be contacted at (800) 424-8666 or by email at info@acb.org.
- National Center on Accessibility: NCA publishes "What Are Alternative Formats? How Do They Apply to Programs and Services?," which is available for downloading from the NCA website (http://www.ncaonline.org/).
- National Center for Accessible Media (NCAM): NCAM is a research and development facility dedicated to the issues of media and information technology for people with disabilities in their homes, schools, workplaces, and communities. Developers of Web- and CD-ROM-based multimedia need an authoring tool for making their materials accessible to persons with disabilities. NCAM has developed two such tools, version 1.0 and 2.01 of the Media Access Generator (MAGpie), for creating captions and audio descriptions for rich media. MAGpie is available for download from NCAM's website (http://ncam.wgbh.org).

American Sign Language Interpreters

A pool of on-call American Sign Language interpreters should be developed. The list of such interpreters should be routinely updated to ensure their availability. Some programs may need to have a pool of interpreters who are available on a 24-hour basis to handle emergency procedures.

The required qualifications of these interpreters should be established. Many non-certified interpreters provided by local services may have excellent skills and be qualified to handle most circumstances. However, certain circumstances, such as the provision of emergency medical services, may require interpreters who are approved by the courts and can ensure a level of confidentiality. The City may want to contact each agency in advance of a need for services to determine their rates so that it is prepared to cover the communication expenses, should the need arise. The City should always request RID certified interpreters. Only in the event that certified interpreters are unavailable should non-certified interpreters be relied on.

Individuals who are hard of hearing generally do not use ASL interpreters. The individual requesting an accommodation should be asked what type of accommodation works best for them. Determining what accommodation(s) will be provided is an interactive process. Depending on the situation, accommodating an individual who is hard of hearing may include note writing, use of assistive listening devices, and/or provision of Computer Assisted Real-Time (CART) captioning.

Assistive Listening Systems and Devices

Systems and devices to amplify sound for persons with hearing disabilities should be available for public meetings and events. Various technologies exist for these devices. Different types of devices are more suitable for different types of hearing disabilities. Devices should be chosen to accommodate the greatest number of individuals.

- See the online directory of augmentative and assistive communications manufacturers and vendors available at the California Assistive Technology System website (http://www.atnet.org).
- See also the Assistive Listening Systems Technical Bulletins available on the US Access Board's website (http://www.access-board.gov/).

Closed Caption Machine

To the extent practical, City departments should have access to a device for encoding closed captioning on films and videotapes used for training and other programs.

- See the online directory of on-site and remote real-time captioning services available at the California Assistive Technology System website (http://www.atnet.org).

Optical Readers

Equipment that can translate printed information into an audio format should be available to the City programs.

Text Telephone (TTY)

City programs should have access to a text telephone or to a telephone transfer service as required by law and offered by public telephone companies.

- TDI: TDI's (formerly known as Telecommunications for the Deaf, Inc.) mission is to promote equal access in telecommunications and media for people who are deaf, hard of hearing, late deafened, or deaf blind. TDI's online resources include information about telecommunications access such a TTY, pagers, telephony, VoIP, and more (http://tdiforaccess.org/).
- See the Text Telephones Technical Bulletin available on the US Access Board's website (http://www.access-board.gov/).

Video Relay Services (VRS)

Video Relay Service (VRS) is a form of Telecommunications Relay Service (TRS) that enables persons with hearing disabilities who use American Sign Language to communicate with voice telephone users through video equipment, rather than through typed text. Video equipment links the VRS user with a TRS operator—called a communications assistant (CA)—so that the VRS user and the CA can see and communicate with each other in signed conversation. Because the conversation between the VRS user and the CA flows much more quickly than with a text-based TRS call, VRS has become a popular form of TRS (www.fcc.gov/guides/video-relay-services).

- Hands on Video Relay Service: (877) 467-4877 English or (877) 467-4875 Spanish
- Sorenson Video Relay: Using a standard telephone, call the toll-free number at (866)-327-8877. Have the contact information of the deaf or hard-of-hearing individual (i.e., name, videophone number, or IP address) ready. Remain on hold until the call is answered by the next available interpreter.
- Sprint VRS Directions: (877) 709-5776 or website (www.sprintvrs.com)

Enlarging Printed Materials

A copy machine capable of enlarging printed materials should be available for staff.

Guide to Disabilities and Disability Etiquette

A guide to disabilities and disability etiquette should be assembled and distributed to staff and volunteers. The guide will ensure that staff and volunteers are familiar with a variety of types of disabilities and that they are sensitive to the abilities and needs of people with disabilities in order not to offend or demean them. The guide should be periodically updated to ensure it includes current acceptable language for talking about disabilities.

- Disability Etiquette: Interacting with People with Disabilities is available online (http://www.courts.ca.gov/documents/access-fairness-etiquette-2009.pdf).

Lending Library of Assistive Technology Equipment

The City should establish a "Resources Toolkit" of adaptive aids and resources that will be available for use by staff and volunteers without the means to assemble their own. It is recommended that the City explore local sources of assistive technology.

- The US Department of Labor's online resources have guides and information for educators and high schools students, including inclusion materials, educational technology, a comprehensive list including college preparatory materials, transition issues for children with special needs, and more (https://www2.ed.gov/about/offices/list/ocr/transitionguide.html; https://www.dol.gov/odep/topics/disability.htm).
- Accessibility Connections Community Map: A Directory of Bay Area Assistive Technology Services is an online service available at http://www.cforat.org/ BARD/.
- Accessible Technology Coalition: An interactive website for information on accessible technology resources related to vision, hearing, computer access, workplace, learning, communication, seating and mobility, recreation and leisure, environmental controls, and aging (https://atcoalition.org/).
- American Association of People with Disabilities: The association is the largest nonprofit, nonpartisan, cross-disability organization in the United States (http://www.aapd.com/).
- American Foundation for the Blind (AFB): The foundation is committed to improving accessibility in all aspects of life—from cell phones to ATMs, on websites and in workplaces. Services include assistance in making products and services accessible to people with visual impairments. AFB offers expert consulting services and accessible media production. AFB provides objective

product evaluations of adaptive technologies through its assistive technology product database (http://www.afb.org/). Local assistance is available through the California Assistance for the Blind and a directory of services for the blind and visually impaired in California is available on its website (http://www.ccbnet.org/calif.htm)..

- Institute for Human Centered Design: This educational nonprofit organization is committed to advancing the role of design in expanding opportunity and enhancing experience for people of all ages and abilities. The institute provides education and consultation to public and private entities about strategies, precedents, and best practices that go beyond legal requirements to design places, things, communication, and policy that integrate solutions to the reality of human diversity (http://www.adaptenv.org/).
- The Arc: The Arc (formerly Association for Retarded Citizens of the United States) is the country's largest voluntary organization committed to the welfare of all children and adults with mental retardation and their families. Local information is available from Arc Alameda County, 14700 Doolittle Drive, San Leandro, CA 94577; (510) 357-6619 or by email via the website (www.arcalameda.org) and The Arc San Francisco, 1500 Howard Street, San Francisco, CA 94103; (415) 255-7200 or by email via the website (www.thearcsf.org).
- Environmental Health Network (EHN): EHN's focus is on issues of access and developments relating to the health and welfare of the environmentally sensitive and to promote public awareness of environmental sensitivities and causative factors. EHN provides information on environmental and chemical sensitivities at EHN, P.O. Box 1155, Larkspur, CA, 94977-1155; (415) 541-5075 and on its website (http://ehnca.org/)
- National Association of the Deaf (NAD): NAD is a national consumer organization representing people who are deaf and hard of hearing. NAD provides information about standards for American Sign Language interpreters and the Captioned Media Program on its website (http://www.nad.org/).
- National Federation of the Blind (NFB): NFB is a national organization advocating on behalf of persons who are blind or have low vision. NFB provides online resources for technology for the blind, including a technology resource list, a computer resource list, screen access technology, sources of large-print software for computers, and sources of closed circuit televisions (http://www.nfb.org/).
- National Organization on Disability: The organization promotes the full and equal participation and contribution of America's 54 million men, women, and children with disabilities in all aspects of life. NOD maintains an online directory of information and links, including transportation-related resources (http://www.nod.org/).
- Paralyzed Veterans of America (PVA): PVA is a national advocacy organization representing veterans. PVA's Sports and Recreation Program promotes a range of activities for people with disabilities, with special emphasis on activities that enhance lifetime health and fitness. PVA's website (http://www.pva.org) has information on useful sports publications and a list of contacts.

- State Council on Developmental Disabilities: This council works to ensure that people with developmental disabilities and their families receive the services and supports they need. The council is an independent state agency established by federal and state law. The council's contact information is: 1507 21st Street, Suite 210, Sacramento, CA 95814-5299; (916) 322-8481; email scdd@dss.ca.gov or website (http://www.scdd.ca.gov/).
- Office of Deaf Access, California Department of Social Services, 744 P Street, MS 6-91, Sacramento, CA 95814; (916) 653-8320; email deaf.access@dss.ca.gov or website (http://www.cdss.ca.gov/Deaf-Access).
- Office of Services to the Blind, California Department of Social Services, 744 P Street, MS 6-94, Sacramento, CA 95814; (916) 657-3327; email BlindAccess@dss.ca.gov or website (http://www.cdss.ca.gov/Blind-Services).
- United Cerebral Palsy (UCP): UCP's mission is to advance the independence, productivity, and full citizenship of people with cerebral palsy and other disabilities, through their commitment to the principles of independence, inclusion, and self-determination (http://www.ucp.org).
- United Spinal Association: The association is a membership organization serving individuals with spinal cord injuries and disorders. Formerly known as the Eastern Paralyzed Veterans Association, the organization expanded its mission to serve people with spinal cord injuries or disorders regardless of their age, gender, or veteran status (http://www.unitedspinal.org).
- World Institute on Disability (WID): WID is an international public policy center dedicated to carrying out research on disability issues. WID maintains an online information and resource directory on technology, research, universal design, and ADA (http://www.wid.org/resources/).

Resources for Persons with Disabilities in Lodi

4299 Lodi Toastmasters Club
643 California Baseball Academy
A T Valdez Foundation
A Way Out Inc.
Alpha Delta Chapter of Lodi California of Omega Nu Sorority
Anapa Nui Inc.
Animal Friends Connection Humane Society
Arthur C. Boehmer and Florence Shubert Boehmer Scholarship Fund
Beth Hallel Messianic Fellowship
Bethel 276 International Order of Jobs Daughters
Bethel Church of San Francisco Open Bible
Bethel Gardens
Beyond Partnership
Big Valley Bible Church
Big Valley Seniors Softball Club of Lodi-Stockton, California
Boosters of Boys/Girls Sports
Pentecostes Monte Sinai de la Biblia Abierta
People Assisting Lodi Shelter
Phrabuddhivongsamunee Buddhist Temple
Pixie Woods
Pleasant Grove Community Church
Police Officers Association of Lodi
Pregnancy Resource Center of Lodi
Pro Elite Baseball Club
Providence Reformed Church Inc.
Racers Under the Son North
Radiant Life Church of Lodi
Redeemer Lutheran Church of Lodi
Reese Parents Club
Remedy Church of Lodi
Renew Church of Stockton
Respiratory Works Inc.
Rivergate Mokelumne Owners Association
Rosa de Saron Church Inc.
Rotary Club of Lodi

Borchardt PTA
Buddhist Church of Lodi
Building Blocks Neighborhood Corporation
Burson Full Gospel Church
California Interscholastic Federation Sac-Joaquin Section
California Islamic Center
California Wine Education Foundation
Calvary Chapel Lodi Inc.
Casa de Refugio de la Biblia Abierta
Cats of All Colors Inc.
Century Assembly Inc.
Champion Ministries
Chapter 6 Lodi Widowed Persons Association of California Inc.
Cherokee Memorial Park
Christ Evangelical Lutheran Church of Lodi
Christian Women's Renewal
Church of Christ Washington Street
Church of God Seventh Day of Lodi, California
Citizens Church of Open Bible
City of Lodi Employees Association
Cornerstone Evangelical Free Church of Lodi
Corvettes of Lodi
Daughters of Isabella Saint Anne's Circle 1332
Delta Fly Fishers
Deshmesh Darbar of Lodi and Stockton
Dhamarangsey Cambodia Buddhist Wat
Duncan Ministries Inc.
El Solyo Foundation
Elm West Homes Association
Emanuel American Lutheran Church of Lodi
Emanuel Lutheran Church Lodi
Faith Community Church of the Nazarene
Feel the Power Impact Ministries
First Baptist Church of Lodi, California
First Church of Christ Scientist Lodi, California
Flora Rebekah Lodge No 162 Independent Order of Odd Fellows
FOE Auxiliary, California State
French Camp Jail Neighborhood Lighthouse Aglow International
Friends of the Lodi Library Incorporated
Generations Church of Pleasant Hill
San Joaquin County Chapter Thrivent Financial for Lutherans
San Joaquin County Historical Society
San Joaquin County Zoological Society
San Joaquin Dog Training Club
San Joaquin Valley Mens Ministry
School of Prophets Ministry
SFDFA Inc.
Share Homes
Sigma Nu Iota Kappa Chapter Housing Corporation
Solid Rock Fellowship Open Bible Church
Solutions
Sons in Retirement Tokay Branch 145 Incorporated
Sons of California Galt Chapter
Sonshine Specialized Camping Ministries
Soroptimist International of Lodi
Spirit Life Fellowship
Sri Aurobindo Association of America
Sri Aurobindo Sadhana Peetham
St. Anne's Endowment
St. John the Baptist Parish
St. Paul Lutheran Church
St. Peter Lutheran Church of Lodi, California
Stockton Chapter No. 266 National Sojourners
Stockton Christian Life Foundation Inc
Stockton Commandery No. 8
Stockton LLL
Stockton Opera Association Inc.
Stockton Pupil Personnel Association Inc.
Stockton Singles Inc.
Stockton YMI Elderly Housing
Stonetree Condominiums Owners Association
Stress and Grief Relief Inc.
Sunny Malhotra Singh
Tamarack Springs Mutual Water Company Inc.
Temple Baptist Church of Lodi, California
Tenrikyo Western Church
The American Association of University Women Lodi, California
The Bridge of Faith Open Bible Church
The Charles and Shirlene Clark Family Foundation
The Doves Guidance Program
The First United Methodist Church of Lodi, California
The Founder Rehabilitation Ranch

DRAFT

Genesis Forum Academy
Giving Opportunities to Kids Got Kids
Go Foundation
Gold Country Irish Red and White Setter Society
Golden Trumphets
Golden Valley Kennel Club
Grace and Mercy Charitable Foundation
Grand Chapter of California Order of Eastern Star 150 Lodi
Grand Lodge of the Order of Hermann Sons of the State of California
Grape Bowl Classic
Gratitud
Gujarati Community of San Joaquin County
Guthrie Consulting Inc.
Harvest Worship Center Pentecostal Church of God Northern Calif
Hideaway Homeowners Association
Hill House Historical Society Inc.
Hole in My Heart Ministries
Holt Counseling Center
Hope Floats
Hope for a Better Tomorrow Inc.
Hope Initiative Inc.
HopeNet Resources International Inc.
Hutchins Street Square Foundation
Iglesia Biblica El Calvario
Iglesia Cristiana Biblia Abierta
Iglesia Cristiana Casa de Restauracion
Iglesia Cristiana Vino Nuevo
Iglesia El Mesias
Iglesia Faro de Luz de la Biblia Abierta
Inspiring Hope Community Dancers
International Ballet Theater Institute Monterey Bay
Islamic Cemetery of California
Odd Fellows Hall Association of Lodi
Open Bible Christian Center
Open Bible Church
Operation Troop Outreach
Order of Hermann Sons of California Group Return
Orthodox Church Capital Improvement Fund
Outreach Ministries International
Pacific Region of Open Bible Standard Churches
Pastor of St. Anne's Church
The Geweke Foundation
The Golden State Institute
The Grace Presbyterian Church of Lodi, California
The Home Church Bible Baptist of Stockton, California
The LG Anderson Family Foundation Inc.
The Lodi Police Partners Foundation
The Loel Foundation
The Maley-Thawley Family Foundation
The Michael-David Family Foundation
The Pixie 12 Arts Foundation
The Rocky Robinson Charity Organization
The Spiritual Assembly of the Bahais of Lodi
The Vaccarezza-Murdaca Family Foundation
The Village Adult Developmental and Community Center
The Womans Club of Lodi
Thomas Onoyama Memorial Scholarship Fund
Thunder Media Ministries Inc.
Tienda Place Homeowners Association
Tip Your Heart Foundation
Tokay AS
Tokay Band Boosters Club Inc.
Tokay FFA Ag Boosters
Tokay High PTSA
Tokay Stitch N Quilt Guild
Tower Park Yacht Club
Tree Lodi
Truckers United Fraternity Super Offspring of the Boss
Unfettered Ministries Inc.
United Congregational Christian Church of Lodi
Urban Life Christian Church of Open Bible
Valley Rose Court No 158
Valley Waterfowl
Valley Womens Community Club
Victory Outreach, Lodi
Vinewood Community Church
Vinewood Parent Club
Vista Oaks Charter School Inc.
Willow Glen Property Owners Association
Woodbridge PTA
World Autism and Savant Foundation
World of Wonders Science Museum Inc.

DRAFT

Peace4Youth Inc.

Wrestling Booster Club of Tokay High
Young Ladies Grand Institute 91 Queen of Peace
Zion Lutheran Church of Lodi

Appendices

Appendix A: ADA Self-Evaluation Survey

Appendix B: Public Comment

Appendix C: Facility Report

Appendix D: Public Rights-of-Way City Standard Details

Appendix E: Grievance Form

DRAFT

Appendix A: Program Self-Evaluation Survey

City of Lodi
ADA Self-Evaluation Survey

Please list your department, division & program:

Department:	Department
Division/Bureau:	Division
Program (as named on survey notice):	Program/Service

Copyrighted and used with the permission of the City and County of San Francisco, Mayor's Office on Disability.

Survey Instructions

The Self-Evaluation Survey is designed so that you have to answer only those questions that are relevant to your program. It is divided into six sections according to different types of services and activities, as follows:

I. Program Background

II. General Public Contact

III. Intensive "Client" Contact

IV. Contracting

V. Purchasing

VI. Staff Training & Technical Assistance

Start at Section I and continue from there. At the beginning of each section is an explanation of the types of programs that are covered by that section. Please, read each section description carefully to determine whether the questions in that section apply to your program. If your program does not fit the section description, you may skip to the next section.

There is a space for comments at the end of every section, as well as at the end of the survey.

Please keep in mind that the Survey is not a test. The survey is a tool that is being used to gather baseline data about the accessibility of city benefits and services. We hope to identify best practices as well as areas where improvement is needed. The City and County will use the data gathered to determine where resources and training are needed to improve access across all programs.

If you have any questions about the survey, please contact City ADA Coordinator Joseph Wood at x2467.

Frequently Asked Questions

My Department has already evaluated the accessibility of our facilities. How does the Self-Evaluation Survey relate to that evaluation?
The Self-Evaluation Survey is focused on programmatic and communication access. It does not address architectural issues. Even if your Department has already developed, or is in the process of developing a Transition Plan, *you must complete the Self-Evaluation Survey.*

Is the survey asking about my Department's policies?
No. The Survey is an evaluation of City *programs*, not Departments. While there may be some overlap with your department, the survey asks questions about the policies, procedures and practices of your *individual program*. In answering the questions, you should limit your responses to the service or cluster of services you oversee.

How are you defining "program"? What about "program manager"?
For the purposes of the Self-Evaluation:

> *A "program" is a service or cluster of services with a single purpose*. Because Departments vary significantly in structure and type of service provided, programs within these Departments also vary. In some cases, smaller clusters of services were grouped together as one because they act as one program when developing and implementing policies, procedures and practices.
>
> *A "program manager" is the person who is responsible for the program*. For the purpose of the Self-Evaluation, a program manager is the responsible individual who is close enough to the day-to-day workings of the program to have a sense of the actual practices, and who has some authority over the program's policies and procedures.

How are you defining disability?
This survey uses the term disability as it is defined in the Americans with Disability Act: *"a physical or mental impairment that substantially limits a major life activity; a record of such an impairment; or being regarded as having such an impairment."* "Physical or mental impairment" includes, but is not limited to: visual, speech and hearing impairments, cerebral palsy, diabetes, mental retardation, emotional illness, HIV disease and drug addiction. Examples of "major life activities" include: caring for one's self, performing manual tasks, walking, seeing, hearing, speaking, breathing, learning and working.

I don't see a lot of "don't know" answer options. If I don't know the answer to a question, should I research the question or just answer "no"?
If you don't immediately know the answer to a question, we prefer that you ask around to find an answer. If you can't get an answer after asking around, you should answer "no."

Section I. Program Background

Who must complete this section? All programs must complete this section.

1. Name of person completing this survey:
   Title:

   Phone:

   Fax:

   E-mail:

2. Primary Location of Program:
   Street Address:

   City:

   State:

   Zip:

3. How many employees work in this program?
   ☐ 0 – 10
   ☐ 11 – 20
   ☐ 21 – 50
   ☐ over 50

4. What is the approximate total budget for this program?
   ☐ under $500,000
   ☐ $500,000 - $1,000,000
   ☐ $1,000,001 - $5,000,000
   ☐ over $5,000,000

5. Does your program issue licenses or certifications (e.g., foster home, marriage, dog licenses, etc.)?
   ☐ Yes ☐ No

6. In three sentences or less, please describe the contact your program has with the public (e.g., people come into our office for x, y, and z; no one ever comes to our office but we buy information kiosks that are used by the public; we do fieldwork and interact with members of the public in the field; we give grants to organizations that provide x, y and z services to the public; we have clients who must apply for our program and meet certain criteria for continuing to receive service from us; etc.)."

Section II. General Public Contact

Who must complete this section? Complete this section if your program has **any direct contact** with the public. This includes programs that lead tours, recruit and hire members of the public, provide information, issue citations or licenses, host meetings, collect fees, provide job training, administer benefits, etc. This does not include programs that provide public service through contracted agencies (see Section IV, below). If your program provides service through contracted agencies or does not have direct contact with the public (e.g., purchasing programs), you may skip this section.

A. Population Information

1. Approximately how many members of the public receive service from your program each year?
   - ☐ Under 1000
   - ☐ 1,000 – 5,000
   - ☐ 5,001 – 10,000
   - ☐ Over 10,000

2. Approximately what percentage of these individuals has disabilities? *[Note: We understand that your program may not collect this data and do not expect you to do so. However, your best estimate of this percentage will give us a clearer picture of your program. In your estimate, please be sure to consider those people with hidden disabilities (e.g., psychiatric illness) as well as those with visible disabilities (e.g., visual impairment).]*
   - ☐ NONE
   - ☐ Under 10%
   - ☐ 10% – 25%
   - ☐ 26% - 50%
   - ☐ over 50%
   - ☐ Have no idea

B. General Policies, Procedures & Practices

1. How do you inform members of the public about your program? (Check all that apply.)
   - ☐ Verbal outreach
   - ☐ Brochure
   - ☐ Flyer/notice in community
   - ☐ Advertisement in newspaper, bulletin, etc.
   - ☐ Website
   - ☐ Other, please name: _____

2. Does your program ever provide transportation for its applicants or participants?
   ☐ Yes [GO TO 2.1] ☐ No [GO TO 3]

   2.1 If yes, what type?
   - ☐ Mini-van
   - ☐ Ramp-taxi
   - ☐ Bus pass or tokens
   - ☐ Other, please name: _____

2.2 Do you provide wheelchair accessible transportation for people who need it?
☐ Yes ☐ No

3. Does your program or service have safety standards (e.g., applicants must be able to care for themselves, participants may not have a history of violent or criminal behavior)?
☐ Yes [GO TO 3.1] ☐ No [GO TO 4]

3.1 If yes, please briefly describe the standards:

3.2 How do you determine whether an individual meets these standards?
☐ Self-identification by individual
☐ Staff observation
☐ Staff interview
☐ Testing
☐ Records check
☐ Other, please name: _____

4. Does your program have any components or services that are exclusively for people with disabilities (e.g., a housing program designated for persons with disabilities, an alternate employment program, a different application process, special meeting times, etc.)?
☐ Yes [GO TO 4.1] ☐ No [GO TO SECTION C]

4.1 If yes, please list these components or services:

4.2 May people with disabilities also participate in the general program if they so choose?
☐ Yes, always
☐ Yes, under special circumstances
☐ No

4.2a If you answered "Yes, under special circumstances" or "No" please explain:

C. <u>Communications</u>

1. Does your program use an automated phone menu system to access staff and/or information on services (i.e., push 1 for… push 2 for…)?
☐ Yes [GO TO 1.1] ☐ No [GO TO 2]

1.1 If yes, does the system offer a simple (1 step) way for a caller to bypass the menu and speak directly with a program representative?
☐ Yes ☐ No

2. Does your program have a TTY/TDD (text telephone for communicating with people with hearing and/or speech impairments)?
   ☐ Yes [GO TO 2.1] ☐ No [GO TO 3]

   2.1 If yes, do you have a dedicated phone line for the TTY/TTD?
   ☐ Yes ☐ No

   2.2 What is the TTY/TDD number?

   2.3 Where is the TTY/TDD number listed? (Check all that apply.)
   ☐ Brochure or other distributed written material
   ☐ Public phone directory
   ☐ Recorded message
   ☐ Website
   ☐ Other, please name: _____

   2.4 Does the TTY/TTD have an answering machine that receives calls when a live person is not available (i.e., is your TTY/TTD functional 24 hours a day)?
   ☐ Yes ☐ No

   2.5 Are members of your staff trained in how to use the TTY/TDD?
   ☐ Yes [GO TO 2.5A] ☐ No [GO TO 3]

   2.5a If yes, please briefly describe the training they receive:

   2.5b How frequently is this training provided?
   ☐ At orientation
   ☐ On request
   ☐ Semi-annually
   ☐ Annually
   ☐ Other, please name: _____

3. Does your program provide phones for the public to use to make outgoing calls when needed (e.g., to call for transportation or to track down a required document)?
   ☐ Yes [GO TO 3.1] ☐ No [GO TO 4]

   3.1 If yes, is there a TTY/TTD available for making these calls?
   ☐ Yes ☐ No

4. Is your program staff trained in how to use the California Relay Service?
   ☐ Yes ☐ No

5. Are people with disabilities portrayed in any of the materials used by your program (e.g. written descriptions, pictures, videos etc.)?
   ☐ Yes [GO TO 5.1] ☐ No [GO TO 6]

   5.1 If yes, please describe briefly:

6. Does your program notify the public about whether your program office(s) is/are architecturally accessible (e.g., whether or not it is accessible to people in wheelchairs, whether or not there are obstructions that would hinder people who are blind)?

☐ Yes [GO TO 6.1] ☐ No [GO TO 7]

6.1 If yes, please indicate the methods you use to communicate this information: (Check all that apply.)

☐ Verbal outreach
☐ Posted notice outside facility
☐ Brochure
☐ Flyer, notice in community
☐ Advertisement in newspaper, bulletin, etc.
☐ Website
☐ Other, please name: _____

7. Do you ever provide information to the public through videos, movies or television broadcasts?

☐ Yes [GO TO 7.1] ☐ No [GO TO 8]

7.1 If yes, do these videos, movies, or broadcasts have captioning for individuals with visual impairments (i.e., is the verbal portion of the broadcast transcribed and displayed at the bottom of the screen)?

☐ Yes ☐ No

7.2 Do these videos, movies or broadcasts have an audio narration option for individuals who have visual impairments?

☐ Yes ☐ No

8. Does your program include exhibits and/or interpretive displays (e.g., art exhibits, historical displays, information kiosks, etc.)?

☐ Yes [GO TO 8.1] ☐ No [GO TO 9]

8.1 If yes, is information in the exhibit/display provided in a variety of formats?

☐ Written
☐ Audio
☐ Graphic/Pictorial
☐ Other, please name: _____

9. Does your program use any of the following alternative formats and/or auxiliary aids to make program materials and services accessible to people with disabilities (e.g., to make written materials accessible to people with visual impairments, to make interviews accessible to people who are deaf)? (Check all that apply.)

Alternative Formats

☐ Audiotape
☐ Enlarged print
☐ Braille
☐ Computer disk

☐ Website
☐ E-mail
☐ Other, please name: _____

Auxiliary Aids

☐ Sign language interpreters
☐ Assistive listening devices
☐ Real-time captioning
☐ Readers
☐ Call-in/speakerphone capability
☐ Assistants (who perform tasks such as translating for a person with speech impairment)
☐ Other, please name: _____

9.1 Please briefly describe the procedure someone must follow to request materials in alternative formats and/or auxiliary aids:

9.1a Is this procedure documented in written form?
☐ Yes ☐ No

9.2 Do you notify the public that they may request alternative formats and/or aids if needed?
☐ Yes [GO TO 9.2A] ☐ No [GO TO 9.3]

9.2a How are members of the public notified that they may request alternative formats and/or auxiliary aids if needed? (Check all that apply.)
☐ Verbal explanation at service window
☐ Posted notice program office
☐ Brochure or other distributed written material
☐ Recorded message
☐ Website
☐ Other, please name: _____

9.3 What is the average length of time that someone must wait for approval of a request?
☐ Less than 1 hour
☐ 1 hour – 24 hours
☐ 25 hours – 72 hours
☐ 73 hours to 1 week
☐ over 1 week

9.4 Please list the firm(s) and/or organization(s) you use to access auxiliary aids (e.g., the firm you use to access ASL interpreters, etc.):

10. Does your program hold public meetings, hearings or other events?

☐ Yes [GO TO 10.1] ☐ No [GO TO 11]

10.1 If yes, does your program hold public meetings, hearings or other events regularly at specific locations (i.e., at locations other than your program locations listed in Section I)?

☐ Yes [GO TO 10.1A] ☐ No [GO TO 10.2]

10.1a If yes, please list these specific locations:

10.2 Does your program notify the public about whether or not the locations of public meetings, hearings or other events are architecturally accessible?

☐ Yes [GO TO 10.2A] ☐ No [GO TO 10.3]

10.2a If yes, please indicate the methods you use to communicate this information: (Check all that apply.)

☐ Verbal outreach
☐ Written meeting notice
☐ Posted notice outside facility
☐ Advertisement in newspaper, bulletin, etc.
☐ Website
☐ Other, please name: _____

10.3 Do you use any of the following alternative formats and/or auxiliary aids to make public meetings, hearings or other events accessible to people with disabilities?

Alternative Formats

☐ Audiotape
☐ Enlarged print
☐ Braille
☐ Computer disk
☐ Website
☐ E-mail
☐ Other, please name: _____

Auxiliary Aids

☐ Sign language interpreters
☐ Assistive listening devices
☐ Real-time captioning
☐ Readers
☐ Call-in/speakerphone capability
☐ Assistants (who perform tasks such as translating for a person with speech impairment)
☐ Other, please name: _____

10.3a If you answered yes to any of the above, is the procedure for requesting and receiving alternative formats and/or auxiliary aids for public meetings, hearings or other events **different** from the procedure for requesting these formats and aids for program services?

☐ Yes [GO TO 10.3A1] ☐ No [GO TO 11]

10.3a1 If yes, please explain these differences. (Be sure to note any differences in the ways the public is notified, request procedure, length of request approval period, firms used, etc.):

11. How does your program pay for costs incurred from accommodating people with disabilities (e.g., paying for interpreters, alternative formats, individual staff assistance, etc.)?

☐ Fees from participants with disabilities
☐ Fees from all participants
☐ Specific budget line item
☐ Included in general budget
☐ Other, please name: _____

D. Modification of Policies, Procedures & Practices

1. Does your program allow an individual to request a modification of program policies, procedures or practices to accommodate his/her disability (e.g., a waiver of an orientation requirement for someone who cannot attend at the required time due to a disability, a home visit for someone who is homebound and cannot come into the program office, assistance completing a required form for someone with a cognitive impairment, etc.)?

☐ Yes [GO TO 1.1] ☐ No [GO TO 2]

1.1 If yes, please briefly describe the procedure for requesting and providing modifications:

1.1a Is this procedure documented in written form?

☐ Yes ☐ No

1.2 Do you notify the public that they may request such modifications when needed?

☐ Yes [GO TO 1.2A] ☐ No [GO TO 1.3]

1.2a If yes, what does the notice include?

☐ Notice of right to non-discrimination
☐ Notice of right to reasonable modification of policies, procedures and practices
☐ Information on how to request a modification
☐ Phone number to call to request a modification
☐ TTY number to call to request a modification
☐ A form to complete to request a modification
☐ An address at which to make the request in person
☐ Contact information of an advocate or ombudsperson

☐ Other, please name: _____

1.2b How are members of the public notified they may request modifications if needed)? (Check all that apply.)

☐ Verbal explanation at service window
☐ Posted notice in program office
☐ Brochure or other distributed written material
☐ Recorded message
☐ Website
☐ Other, please name: _____

1.3 What is the average length of time that someone must wait for approval of a request?

☐ Less than 1 hour
☐ 1 hour – 24 hours
☐ 25 hours – 72 hours
☐ 73 hours to 1 week
☐ over 1 week

1.4 How are staff (including receptionists, service window attendants, client service staff, etc.) informed about how to handle requests for modification? (Check all that apply.)

☐ Word-of-Mouth/Experience
☐ Employee Handbook
☐ Other documented procedure
☐ Training
☐ Other, please name: _____

1.5 Approximately how frequently does your program receive requests for modification of policies, procedures or practices?

☐ Never
☐ 1 – 10 x per year
☐ 11 – 25 x per year
☐ 25 – 50 x per year
☐ More than 50 x per year

1.6 In the last year, has your program modified a policy, procedure and/or practice for a person with a: (Check all that apply.)

☐ psychiatric disability?
☐ learning or Cognitive disability?
☐ speech impairment?
☐ hearing impairment?
☐ visual impairment?
☐ mobility impairment?
☐ immune disorder (such as HIV, Multiple Chemical Sensitivities, etc.)?

1.6a Please give an example of a modification that was made for each "yes" checked:

1.7 Does your program provide alternatives to an individual whose request for modification is denied (e.g., instead of a home visit to fill out an application, you offer a phone interview and mail the application to be signed by the homebound individual)?

☐ Yes [GO TO 1.7A] ☐ No [GO TO 2]

1.7a If yes, please give an example of a situation in which an alternative to a requested modification was provided:

2. Does your program require applicants or participants to wait in line at any time (e.g., at information window, to apply for service, etc.)?

☐ Yes [GO TO 2.1] ☐ No [GO TO 3]

2.1 If yes, are there alternatives available for individuals whose physical or mental disabilities make it unduly difficult to stand or wait for an extended period of time (e.g., a means of holding someone's place in line, staff available to assist people with disabilities, etc.)?

☐ Yes [GO TO 2.1A] ☐ No [GO TO 3]

2.1a If yes, please briefly describe the alternatives:

2.1b Can any staff offer these alternatives or must a request be approved by a designated staff member?

☐ Any staff may offer upon request
☐ Request must be approved by designated staff member
☐ Other, please name: _____

3. Does your program, and/or the facility in which the program is located, have a policy that restricts animals?

☐ Yes [GO TO 3.1] ☐ No [GO TO SECTION E]

3.1 If yes, may this policy be modified to allow for service or companion animals used by people with disabilities (e.g., the guide dog of a person who is blind, or the cat of a person with post-traumatic stress syndrome)?

☐ Yes [GO TO 3.1A] ☐ No [GO TO SECTION E]

3.1a May any staff modify this policy or must a request be approved by a designated staff member?

☐ Any staff may offer upon request
☐ Request must be approved by designated staff member
☐ Other, please name: _____

E. Grievance Policies & Procedures

1. Does your program have a grievance procedure (i.e., a procedure for resolving complaints by the public alleging noncompliance with the ADA in any of your program's services, activities and/or benefits)?

☐ Yes [GO TO 1.1] ☐ No [GO TO SECTION F]

1.1 If yes, please briefly describe this procedure:

1.1a Is this procedure documented in written form?

☐ Yes ☐ No

1.2 Do you notify the public of the grievance procedure?

☐ Yes [GO TO 1.2A] ☐ No [GO TO 1.3]

1.2a If yes, what does the notice include? (Check all that apply.)

☐ Information about how to file a grievance
☐ Phone number to call to register the grievance
☐ TTY number to call to register the grievance
☐ A form to complete to register the grievance
☐ An address where to register the grievance in person
☐ Contact information to an ombudsperson or advocate
☐ Other, please name: _____

1.2b How are program applicants or participants notified of the grievance procedure? (Check all that apply.)

☐ Verbal explanation at service window
☐ Posted notice program office
☐ Brochure or other distributed written material
☐ Recorded message
☐ Website
☐ Other, please name: _____

1.3 Does your program modify the grievance procedure for individuals whose disabilities prevent them from meeting the requirements of the procedure (e.g., providing an alternative to completing a complaint form)?

☐ Yes [GO TO 1.3a] ☐ No [GO TO 1.4]

1.3a If yes, is the procedure for requesting a modification included in the public grievance notice?

☐ Yes ☐ No

1.4 Approximately how frequently is the grievance procedure used?

☐ Never
☐ Once every couple of years
☐ 1 - 10 x per year
☐ 11 - 20 x per year
☐ More than 20 x per year

1.5 Do staff members who make decisions on grievances receive training in the requirements of federal and state disability rights laws?

☐ Yes [GO TO 1.5A] ☐ No [GO TO SECTION F]

1.5a If yes, please briefly describe the training provided:

1.5b How frequently is this training provided?

☐ At orientation
☐ Semi-annually
☐ Annually
☐ Bi-annually
☐ Other, please name: _____

F. <u>Emergency Policies, Procedures & Practices</u>

1. Does the building or site that houses your program have emergency evacuation procedures?

☐ Yes [GO TO 1.1] ☐ No [GO TO 2]

1.1 If yes, please briefly describe these procedures:

1.2 Are these procedures documented in written form?

☐ Yes ☐ No

1.3 Do these evacuation procedures include specific provisions for evacuating people with disabilities?

☐ Yes [TO TO 1.3A] ☐ No [GO TO 1.4]

1.3a If yes, please describe these provisions:

1.4 How are members of <u>the public</u> notified of the emergency evacuation procedures? (Check all that apply.)

☐ Verbal explanation
☐ Posted notice program office
☐ Brochure or other distributed written material
☐ Recorded message
☐ Not notified
☐ Other, please name: _____

2. Is the building where your program is located equipped with visual emergency alarms (e.g., flashing lights) in addition to audio alarms?

☐ Yes ☐ No

Comments for Section II:

Section III. Intensive ("Client") Contact

Who must complete this section? Complete this section if your program has intensive and/or ongoing contact with the public. This includes all programs that have applications and requirements for continued service such as mental health, job training or public benefits programs, etc. This section should be completed in addition to (not instead of) Section II. If your program does not have intensive, ongoing contact with the public, you may skip this section.

A. Application Policies, Procedures & Practices

1. Does your program have eligibility requirements (e.g., evidence of particular skills, record of good tenancy, completion of a training program, etc.)?
   ☐ Yes [GO TO 1.1] ☐ No [GO TO 2]

   1.1 If yes, may these eligibility requirements be modified to accommodate individuals whose disabilities prevent them from meeting them?
   ☐ Yes [GO TO 1.1a] ☐ No [GO TO 2]

   1.1a If yes, are members of the public notified before they are enrolled in the program that they may request modifications (i.e., are individuals who aren't already participants in your program notified of your program's modification procedures)?
   ☐ Yes [GO TO 1.1A1] ☐ No [GO TO 2]

   1.1a1 If yes, please briefly describe how these individuals are notified:

2. Where is the application for your program available? (Check all that apply.)
   ☐ Program office(s)
   ☐ Community-based organization(s)
   ☐ Website
   ☐ Other, please name: _____

3. How may a member of the public apply to your program? (Check all that apply)
   ☐ In person at program office
   ☐ In person at community-based organization
   ☐ By authorized representative
   ☐ By mail
   ☐ By phone
   ☐ By TTY/TTD
   ☐ Through website
   ☐ Through home visit upon request
   ☐ Other, please name: _____

4. Is a member of your staff available to help those individuals who may require assistance in completing an application?
   ☐ Yes ☐ No

5. Does your program require documentation (e.g. birth certificate, driver's license, medical records, etc.) in order for an individual to participate or receive services?
   ☐ Yes [GO TO 5.1] ☐ No [GO TO 6]

   5.1 If yes, does your staff provide any of the following services to assist an individual in obtaining required documentation? (Check all that apply.)
   ☐ Make phone calls to request/retrieve documentation
   ☐ Make photocopies of original documentation
   ☐ Obtain documentation directly (with signed release)
   ☐ Other, please name: _____

   5.1a If you answered yes to any of the above, please describe the circumstances under which these services would be provided:

6. Does your program prohibit service to individuals based on their illegal use of drugs?
   ☐ Yes [GO TO 6.1] ☐ No [GO TO SECTION B]

   6.1 How do you determine whether an individual is <u>currently using</u> drugs illegally?
   ☐ Self-identification by individual
   ☐ Staff observation
   ☐ Staff interview
   ☐ Testing
   ☐ Records check
   ☐ Other, please name: _____

B. <u>General Service Policies, Procedures & Practices</u>

1. Does your program have staffed drop-in hours for potential applicants or program participants who may not have an appointment?
   ☐ Yes ☐ No

2. Does your program have a waiting room?
   ☐ Yes [GO TO 2.1] ☐ No [GO TO 3]

   2.1 If yes, how are people who are waiting notified when it is their turn? (Check all that apply.)
   ☐ Verbal announcement by receptionist/other staff
   ☐ Loudspeaker announcement
   ☐ Notice board or other visual display
   ☐ Individual contact by receptionist/other staff
   ☐ Other, please name: _____

3. If a participant in your program has a disability that requires a regular (as opposed to one time) modification of a policy, procedure or practice, is this information recorded in his/her file or must he/she make a new request at each visit?
   - ☐ Recorded in file
   - ☐ New request at each visit
   - ☐ Other, please name: _____

4. Does your program have requirements that a person must meet in order to remain in the program/continue to receive service (e.g. submit forms, attend meetings, complete assignments)?
   ☐ Yes [GO TO 4.1] ☐ No [GO TO SECTION C]

   4.1 If yes, may these requirements be modified to accommodate individuals whose disabilities prevent them from meeting these requirements?
   ☐ Yes [GO TO 4.1A] ☐ No [GO TO SECTION C]

   4.1a If yes, please give one or two examples of recent modifications your program has made:

C. Service Termination Policies, Procedures & Practices

1. Does your program have service termination criteria?
   ☐ Yes [GO TO 1.1] ☐ No [GO TO SECTION IV]

   1.1 If yes, please list criteria:

   1.2 Does the termination process include an effort to determine whether the cause for termination is related to the participant's disability (e.g., client's failure to call or appear for appointment was result of psychiatric crisis)?
   ☐ Yes [GO TO 1.2A] ☐ No [GO TO 1.3]

   1.2a If yes, please describe this effort:

   1.3 Are participants notified that their participation in the program/service is going to be terminated before actual termination?
   ☐ Yes [GO TO 1.3A] ☐ No [GO TO 1.4]

   1.3a If yes, how are participants notified? (Check all that apply.)
   - ☐ In-person at office
   - ☐ Home visit by staff
   - ☐ Mailed letter
   - ☐ Phone call
   - ☐ Other, please name: _____

1.4 Does your program have a process through which someone can appeal a service termination?

☐ Yes [GO TO 1.4A] ☐ No [GO TO SECTION IV]

1.4a If yes, is the appeal process explained in the termination notice?

☐ Yes [GO TO 1.4A1] ☐ No [GO TO SECTION IV]

1.4a1 If yes, what does the notice include? (Check all that apply.)

☐ Phone number to call to register the appeal
☐ TTY number to call to register the appeal
☐ A form to complete to register the appeal
☐ An address at which to register the appeal in person
☐ Contact information to an ombudsperson or advocate

Comments for Section III:

Section IV. Contracting

Who must complete this section? Complete this section if your program awards and/or monitors contracts to agencies or organizations that provide services to the public. This includes programs that contract work to community-based organizations through an RFP process. If your program does not award and/or monitor contracts, you may skip this section.

1. Does your Request for Proposal/Qualification process include any of the following criteria for evaluating proposals?

   1.1 Potential contractor's history of providing service to people with disabilities?
   ☐ Yes ☐ No

   1.2 Training of potential contractor's staff in serving people with disabilities?
   ☐ Yes ☐ No

   1.3 Potential contractor's ability to modify services to accommodate people with disabilities (e.g., ability to provide additional time or assistance to participants with learning disabilities, established relationships with agencies that provide specialized services to people with disabilities, etc.)?
   ☐ Yes ☐ No

   1.4 Potential contractor's ability to provide written materials in alternative formats (e.g., braille, audiotape, large print, floppy disk, email, website, etc.)?
   ☐ Yes ☐ No

   1.5 Potential contractor's experience using auxiliary aids or services (e.g., sign language interpreters, captioning, readers, etc.)?
   ☐ Yes ☐ No

   1.6 Potential contractor's ability to provide transportation to people with disabilities (if appropriate)?
   ☐ Yes
   ☐ No
   ☐ N/A

   1.7 Whether or not a potential contractor has a written grievance procedure (i.e., a procedure for resolving complaints by the public alleging noncompliance with the ADA in any of the contractor's services, activities and/or benefits)?
   ☐ Yes ☐ No

2. Are your Program Officers/Contract Monitors trained in recognizing programmatic and communication access problems?
   ☐ Yes [GO TO 2.1] ☐ No [GO TO 3]

   2.1 If yes, please briefly described training provided:

2.2 How frequently is training provided?

☐ At orientation
☐ Semi-annually
☐ Annually
☐ Bi-annually
☐ Other, please name: _____

3. In their regular contract monitoring process, do your Program Officers/ Contract Monitors monitor for any of the following criteria?

3.1 Whether contractor notifies the public about how to request modifications or accommodations?

☐ Yes ☐ No

3.1 Whether the contractor has a waiting list?

☐ Yes [GO TO 3.1A] ☐ No [GO TO 3.2]

3.1a If yes, whether an individual can get on the waiting list through means other than standing in line (e.g., with a phone call, mail in form, etc.)?

3.2 Training of contractor's staff in serving people with disabilities?

☐ Yes ☐ No

3.3 Contractor's record of accommodating people with disabilities?

☐ Yes ☐ No

3.4 Contractor's record of providing written materials in alternative formats (e.g., braille, audio tape, large print, floppy disk, email, website, etc.)?

☐ Yes ☐ No

3.5 Contractor's record of using auxiliary aids and services (e.g., sign language interpreters, captioning, readers, etc.)?

☐ Yes ☐ No

3.6 Contractor's record of providing transportation to people with disabilities (when appropriate)?

☐ Yes
☐ No
☐ N/A

3.7 Whether contractor has a written grievance procedure?

☐ Yes ☐ No

3.8 Whether the contractor has designated staff who are trained in resolving grievances?

☐ Yes ☐ No

4. How frequently are programs monitored?
   - ☐ Never
   - ☐ Semi-anually
   - ☐ Annually
   - ☐ Bi-anually
   - ☐ Other, please name: _____

Comments for Section IV:

Section V. Purchasing

Who must complete this section? Complete this section if you oversee purchasing for your program or other programs. Purchasing includes purchasing of computer systems, equipment, etc. If you do not oversee purchasing for your own or other programs, you may skip this section.

1. Do you purchase computer equipment or applications for use by the public?
   ☐ Yes [GO TO 1.1] ☐ No [GO TO 2]

   1.1 If yes, do you make an effort to research state of the art products that may provide greater accessibility for people with disabilities?
   ☐ Yes [GO TO 1.1A] ☐ No [GO TO 2]

   1.1a If yes, please describe this effort:

   1.1b How frequently is the additional cost of accessible equipment or products a bar to purchasing them?
   ☐ Never
   ☐ Occasionally
   ☐ Often

2. Do you purchase large systems or equipment (e.g. new crosswalk signals, voting machines, medical examining tables, kiosk information systems, computer workstations, etc.) for use by the public?
   ☐ Yes [GO TO 2.1] ☐ No [GO TO SECTION VI]

   2.1 If yes, do you make an effort to research state of the art products that may provide greater accessibility for people with disabilities?
   ☐ Yes [GO TO 2.1A] ☐ No [GO 3]

   2.1a If yes, please describe this effort:

   2.1b How frequently is the additional cost of accessible equipment or products a bar to purchasing them?
   ☐ Never
   ☐ Occasionally
   ☐ Often

3. Do you ever put equipment or large system purchases out to bid?
   ☐ Yes [GO TO 3.1] ☐ No [GO TO SECTION VI]

3.1 If yes, does your RFP/Q have a standard component about accessibility features (i.e., do you request vendors to show how their equipment may be used by people with disabilities, such as those with mobility impairments, or who are blind)?

☐ Yes [GO TO 3.1A] ☐ No [GO SECTION VI]

3.1a If yes, please describe this standard component:

3.1b How frequently is the additional cost of accessible equipment or products a bar to purchasing them?

☐ Never
☐ Occasionally
☐ Often

Comments for Section V:

Section VI. Staff Training & Technical Assistance

Who must complete this section? All programs must complete this section. Note: In these questions, the term "staff" refers to all full-time employees (including management/supervisory, client/customer service, clerical, etc.) who work for your program.

1. Do members of your staff receive information on any of the following?
   ☐ Yes (Check all that apply.) ☐ No [GO TO 2]

   ☐ Americans with Disabilities Act (ADA)
   ☐ Fair Housing Amendments Act
   ☐ Section 504 of the Rehabilitation Act
   ☐ State Disability Laws

   1.1 If yes, does this information provide a general overview of the regulations, specific information on how the regulations relate to the services provided by the program, or both?
   ☐ General
   ☐ Specific
   ☐ Both

   1.2 How frequently is training provided?
   ☐ At orientation
   ☐ Semi-annually
   ☐ Annually
   ☐ Bi-annually
   ☐ Other, please name: _____

   1.3 Do all members of your staff receive the above training or only staff at specific levels/classifications?
   ☐ All staff
   ☐ Management/supervisory staff
   ☐ Client contact/customer service staff
   ☐ Clerical/administrative support staff
   ☐ Other, please name: _____

2. Do members of your staff receive training in working with people who have: (Check all that apply.)
   ☐ psychiatric disabilities?
   ☐ learning or Cognitive disabilities?
   ☐ speech impairments?
   ☐ hearing impairments?
   ☐ visual impairments?
   ☐ mobility impairments?
   ☐ immune system disorders (such as HIV, Multiple Chemical Sensitivities, Lupus, etc.)?

2.1 If yes, please briefly describe the training provided:

2.2 How frequently is training provided?

☐ At orientation
☐ Semi-annually
☐ Annually
☐ Bi-annually
☐ Other, please name: _____

2.3 Do all members of your staff receive the above training or only staff at specific levels/classifications?

☐ All staff
☐ Management/supervisory staff
☐ Client contact/customer service staff
☐ Clerical/administrative support staff
☐ Other, please name: _____

3. Do members of your staff receive training in how to use auxiliary aids and services, (e.g., sign language interpreters, live computer captioning, audio narration devices, etc.)?

☐ Yes [GO TO 3.1] ☐ No [GO TO 4]

3.1 If yes, please briefly describe training provided:

3.2 How frequently is training provided?

☐ At orientation
☐ Semi-annually
☐ Annually
☐ Bi-annually
☐ Other, please name: _____

3.3 Do all members of your staff receive the above training or only staff at specific levels/classifications

☐ All staff
☐ Management/supervisory staff
☐ Client contact/customer service staff
☐ Clerical/administrative support staff
☐ Other, please name: _____

4. Does your program have an ADA Coordinator(s) (either dedicated to your program or shared with other programs in your department)?

☐ Yes [TO TO 4.1] ☐ No [GO TO 5]

4.1 If yes, please provide the following:

Name:

Title:

Phone:

Fax:

E-mail:

4.1a For which of the following is this ADA Coordinator responsible? (Check all that apply.)

☐ Architectural access issues
☐ Employment access issues
☐ Communication access issues
☐ Programmatic access issues
☐ Other, please name: _____

4.2 If you have more than one ADA Coordinator, please provide the following additional information for the second ADA Coordinator:

Name:

Title:

Phone:

Fax:

E-mail:

4.2a If yes, for which of the following is this ADA Coordinator responsible? (Check all that apply.)

☐ Architectural access issues
☐ Employment access issues
☐ Communication access issues
☐ Programmatic access issues
☐ Other, please name: _____

5. Would your staff benefit from training and/or technical assistance in providing programmatic and communication access?

☐ Yes [GO TO 5.1] ☐ No [GO TO 6]

5.1 If yes, what kind of training or technical assistance would be helpful? (Check all that are needed/of interest.)

☐ Assistance developing policies and procedures
☐ Training in how to work w/ people with disabilities
☐ Taining in legal requirements
☐ Training in providing accommodations
☐ Resources for alternative formats & auxiliary aids
☐ Other, please name: _____

6. Does your program use the services of contract employees (e.g., security guards, janitors, etc.)?

☐ Yes [GO TO 6.1] ☐ No [GO TO SECTION VII]

6.1 If yes, does your program have a procedure that contract employees are to follow in assisting people with disabilities (e.g., contacting a member of your staff, providing certain accommodations, etc.)?

☐ Yes [GO TO 6.1A] ☐ No [GO TO 6.2]

6.1a If yes, please describe this procedure:

6.2 Does the contract require that employees receive training in interacting with people with disabilities?

☐ Yes ☐ No

Comments for Section VI:

End of Survey

Thank you for completing the ADA Self-Evaluation Survey. We would like to hear from you! Before you submit your survey, please write any comments here:

Please send your survey to:

ADA Coordinator
Office of the City Manager
PO Box 3006
Lodi, CA 95241-1910

Appendix B: Public Comments to be received

Appendix C: Facility Report

Appendix C: Transition Plan / Facility Report		
Animal Services – Shelter Facility **1345 W. Kettleman Lane**		
Barriers Identified	**Cost Estimate**	**Timeline**
Priority 1 – Approach and Entrance • 12 of the 15 doors do not have the proper hardware (door handles) • 11 of the 15 doors have threshold problems • 11 of the 15 doors do not have a clear path for approaches • No direct path of travel between the main building and the office • Drainage causes slope problems throughout • No path of travel to or from outside dog pen	$50,000	2018–2020
Priority 2 – Access to Goods & Services • All doors close in under 5 seconds • All light switches are not complaint	$25,000	2020–2022
Priority 3 – Toilet Rooms • Bathroom is not ADA compliant	$20,000	2020–2022
Priority 4 – Additional Access • None	—	—
City Hall **221 W. Pine Street**		

Priority 1 – Approach and Entrance
• Provide minimum width for access aisle at north handicap parking stall
• Signage for "Van Accessible" parking space needs to be relocated to required height
• Curb ramp at north entrance:
  o Running slopes exceed 1:12
  o Cross slope exceeds 1:48
  o Bottom landing slope exceeds 1:48
• Both sides of front entrance ramps (south entrance) exceed 1:12
• Minimum 60" landing needed at bottom of east ramp for south entrance
• Landings exceed 1:48
• Diameters of the gripping surfaces for the ramp handrails exceed 1.5"
• Clear spaces between the handrails and walls at the ramps exceed 1.5"
• Provide signage at inaccessible entrances indicating the location of the nearest accessible entrance
• Install sign at accessible entrance with International Symbol of Accessibility
	$200,000	2020–2022

DRAFT

• Outer door at north entrance closes in less than 5 seconds. Edges of carpet/mat at north entrance are not firmly tacked down		
Interim-Alternative Methods • Provide temporary signage at inaccessible entrances indicating the location of the nearest accessible entrance (north entrance). • Provide temporary signage indicating elevator as part of accessible route. • During open hours, put up a sign redirecting persons with disabilities to an accessible entrance and contact number of who they can call should they need additional direction/assistance. Multiple directional signs will be provided to get the person to the location desired within the building.	$1,500	Starting November 2017, and ongoing until priority 2 tasks are addressed
Priority 2 – Access to Goods & Services • No directional signage to accessible route (north entrance) or indicating elevator as part of accessible route. • No signage on the elevator door jambs at any floor identifying floor • No tactile star on both sides of the elevator door jambs at the main entry level • Audible signals in elevator do not announce up or down • Elevator door reopening device does not remain in effect for at least 20 seconds • No required accessible counter space at the public counters for Community Development, Public Works, Administration, or Human Resources	$200,000	2020-2022
Interim-Alternative Methods • Put up temporary directional signage to an accessible route (north entrance) and indicate the elevator as part of an accessible route • Put up a sign with instructions to call for assistance at the LULA elevator; this information will also be available on the City's website. Provide assistance, if requested, in going to second floor and directing the person to desired office. • Consider holding meetings at a different location, such as Carnegie Forum, if interested persons are not able to attend. • To access public counters for Community Development and Public Works, use accessible table space located in the meeting room behind the Community Development public counter, called the Community Development Conference Room can be used. To access Administration or Human Resources offices, one of the following meeting rooms can be used: City Manager Conference Room, City Attorney Conference Room, Human Resources Conference Room.	$1,500	Starting November 2017, and ongoing until priority 2 tasks are addressed

DRAFT

• Provide contact information on City's website for requesting any additional needed accommodations.		
Priority 3 – Toilet Rooms • None	—	—
Priority 4 – Additional Access • None	—	—
Carnegie Forum **305 W. Pine Street**		
Priority 1 – Approach and Entrance • Provide signage at inaccessible entrances indicating the location of the nearest accessible entrance • Install sign at accessible entrance with International Symbol of Accessibility	$1500.00	June 2018
Priority 2 – Access to Goods & Services • Provide accessible interior access route within the Council Chambers to the Council and Staff seating areas, as well as to the "media area" • Interior ramp in Council Chambers exceeds 1:12, with no handrail • In-car controls for the LULA elevator are not centered on a side wall • Tactile stars on both jambs of the elevator have been placed on the upper-floor level rather than the main entry level • Install appropriate room identification signage • Width of the door opening going from the front lobby area to the Council Chambers is less than 32" • Insufficient number of wheelchair spaces within the Council Chambers—provide an additional three • Existing wheelchair space is less than the required 60" depth • Information tables at the back of the Council Chamber lobby are not accessible • Speaking podium is not accessible	$250,000	2023–2025
Interim-Alternative Methods • Provide a temporary route within the Council Chambers to the Council and staff seating areas, as well as to the media area, until a permanent route is provided. Signage to be provided. • Put up a sign with instructions to call for assistance at the LULA elevator. • Provide warning in public notices and on the City's website that persons with certain mobility, vision, or other impairments might have difficulty accessing Carnegie Forum, and to contact the City as soon as possible.	$1,500	Starting November 2017, and ongoing until priority 2 tasks are addressed

DRAFT

• Provide contact information in public notices so that interested persons can reach out to the City to ask questions or request assistance. • Identify temporary wheel chair spaces within Council Chambers and place "reserved for handicapped" signs on the chairs. • Provide a temporary information table at the back of the Council Chambers lobby that is accessible. • Provide an additional temporary podium/table that is accessible. • Consider holding meetings at a different location if interested persons are not able to attend due to accessibility barriers.		
Priority 3 – Toilet Rooms • Signage on the toilet room doors do not contrast with their background • No Braille signs • Coat hooks on the toilet compartment doors are higher than 48" above the floor • Front of the lavatory counter surface is higher than 34" above the floor • Toilet stall in the women's restroom, which is intended to be accessible, does not meet the minimum requirements for clear space around the water closet • Grab bar in the men's restroom does not extend at least 54" from the rear wall • Flush control in the women's restroom is not on the open side of the water closet • Toilet paper dispensers are located farther than 9" from the front of the water closet • Toilet paper dispensers do not allow continuous paper flow • Toilet compartment doors are not self-closing • Door pulls are not operable with one hand and require tight grasping and twisting of the wrist • Door locks require grasping, pinching, or twisting of the wrist • Compartment in the women's restroom is less than 60" wide	$200,000	2023–2025
Interim-Alternative Methods • Provide signage during meetings and on public notices that before improvements are made, bathrooms may not be fully accessible to those with certain disabilities and that the City should be contacted for additional information and assistance.	$1,500	Starting November 2017, and ongoing until priority 2 tasks are addressed
Priority 4 – Additional Access • Fire alarm system does not have both flashing lights and audible signals	$5,000	2023–2025

DRAFT

Fire Station No. 1 **210 W. Elm Street**		
ADA Improvements – Completed 2015		
Fire Station No. 2 **2 S. Cherokee Lane**		
New Construction – Completed 2015		
Fire Station No. 3 **2141 S. Ham Lane**		
Priority 1 – Approach and Access • Paint for the parking stall is not contrasting • Parking stall sign is not meeting the 60" minimum height requirement • Curb ramp exceeds 2% at the base • Flares for the ramp are greater than 8.3% • Main entrance is not accessible • Secondary entrance is not accessible • No signs that designate the nearest accessible route • No sign of accessibility on-site • Front door has a bench that is in the area of clearance and back door has a hose hanging in the area of clearance • Both the front door and the back door have a lip greater than 1/4 inch • Doors are not equipped with operable hardware • Front door has a closer that closes in under 5 seconds • Floor mats in at the back and front doors are not secured to the ground	$250,000	2018–2023
Priority 2 – Access to Goods & Services • Path of travel in the bedroom is not at least 36" wide • All signs present do not meet standards • Pull side for the doors in the bay does not have 18" minimum of the required space • Threshold to the BBQ area is higher than 1/4 inch • All door knobs need to be replaced • No designated seating at the dinner table • Front service counter is higher than 36" • No clearance for space for a parallel approach • Not enough room for a parallel approach	$100,000	2018–2023
Priority 3 – Toilet Rooms • None of the bathrooms at Fire Station 3 are accessible	$50,000	2018–2023

DRAFT

• Reasons listing problems with bathroom signs are on the checklist • No clearance on the pool side of the door for the bathrooms • Door knobs require twisting of the wrist • Back bathroom door requires more than 5 lbs of pressure to open • Back bathroom door closes in under 5 seconds • Openings to the bathrooms are too narrow and do not meet the needed dimensions for path of travel with privacy wall • No clear path of travel to the bathroom in the back • No clear floor space to make a 360 degree turn in a wheelchair • Front bathroom does not have the needed 30"x48" inches beyond the door for clear floor space • Coat hook is too high • Insufficient space for 48" of minimum clearance • No clearance under the sink for a front approach • Lavatory is 35" in height • Faucet requires twisting of the wrist • No mounted soap dispensers • Paper towel dispenser is higher than 48" • Compartment stalls are too small to access • No grab bars on the side wall • No grab bars behind the toilet • Flusher is not on the open side of the toilet • Some of the stall doors are too narrow, not meeting the 32" minimum width • The 18" of space is not met on the pull side of the door • Stall doors are not self-closing • No pulls on the stall doors • Door locks require pinching • Toilet stalls are not at least 60" width • Toilet stalls are not at least 59" length • Stalls do not meet the required dimensions • Showers do not meet the requirements: area is too small in dimensions, no folding seat, and no grab bars		
<u>Additional Access</u> • Drinking fountain (has less than 17" underneath) • Operable with one hand, but requires more than 5 lbs • Spout is higher than 36" • Spout does not meet the minimum 15" from back of wall	$30,000	2018–2023

DRAFT

• No second fountain • No fire alarms on site		
Fire Station No. 4 **180 N. Lower Sacramento Road**		
Priority 1 – Approach and Access • Loading zone needs to be repainted • Fix areas that have greater than 2% • No $250 fine for the accessible parking • No $250 fine for the van-accessible parking • Alternative entrance for the fire station is not accessible but is open to the firefighters only during all hours • Inaccessible entrances do not have signs that direct to the nearest accessible entrance • Accessible entrance does not have sign of accessibility • Front door (accessible entrance) does not have a level landing • Locks require pinching on the door handles • Doors close in under 5 seconds • Carpet at the front door is not secured to the ground • Sidewalk path of travel exceeds more than 9% and there is no level landing that is under 2%	$250,000	2018–2023
Priority 2 – Access to Goods & Services • No signs designating permanent rooms • Thresholds for the door are higher than a quarter inch • Handle for the sliding door requires tight grasping • Multiple doors require more than 5 lbs of pressure to open • Multiple doors close in under 5 seconds • Mats are not secured to the ground • No open space on the side of the bench; bench seat is less than 17 inches above the floor • Counter is not at least 36" long and is higher than 36" tall	$100,000	2018–2023
Priority 3 – Toilet Rooms • No signs that direct to the nearest accessible bathroom from the inaccessible bathrooms • No signs mounted on the latch side of the door • For the bathrooms used by the firefighters, the 18" of space on the latch side of the door is not met • Hardware requires twisting of the wrist • No coat hooks in the bathrooms	$50,000	2018–2023

DRAFT

• Bottoms of the pipes are higher than 9", but they are not less than 6" from the wall • More than 5 lbs of pressure to operate soap dispenser • Paper towel dispenser is higher than 48" from the ground • Center rim of the toilet is at 19" from the wall • Pprotruding objects under and above the grab bar behind the toilet • Flush control is not on the open side • Toilet paper dispenser is farther than 9" from the rim of the toilet • Toilet paper does not have continuous flow • Thresholds for the showers are too high • Spacing (66"x60") is not met for the showers • No grab bars in the showers • No folding seat in the showers		
<u>Priority 4 – Additional Access</u> • No water fountains on-site • No public telephones on-site • No fire alarm systems with lights and audible signals	$30,000	2018–2023
Hutchins Street Square **125 S. Hutchins Street**		

<u>Priority 1 – Approach and Entrance</u>
• North Parking Lot
  o Shrubs covering “unauthorized vehicle” wordage
  o Access aisles slopes > 5%
  o 4 spaces required, only 1 present
  o No van-accessible parking
  o No truncated domes, visible crosswalk
  o Accessible aisle missing “no parking” wordage
  o Path of travel > 2%
  o Curb ramp lip @ 1.5”
  o Ramp near door landing raised, which causes a 5.5% slope
  o Multiple cracks along sidewalk
  ▪ Cracks range from ¼” to 1”
  o Stair uniformity not present, last riser off by ½”
  o Handrail does not have extension (12”)
  o Level landing near gate exceeds slope maximum
	$150,000	June 2017

<u>Priority 2 – Access to Goods & Services</u> • Conference/Administration	$150,000	2023–2025

DRAFT

o Doors ▪ Door pushing force exceeds maximum ▪ Door hardware issues ▪ Door closer missing on 1 door ▪ At entrances, door thresholds exceed maximum height ▪ Door closer either not attached or not attached properly ▪ Door timing issues near Crete Hall ▪ Door maneuvering clearance issues ▪ Door landing not level near office break room o Counters ▪ Service counters in lobby area – 30" width & depth issues • Kirst Hall o Doors ▪ Door pressure issues, exceeding 5 lb, and are not fire-rated doors • Door pressures range from 9 to 10 lb ▪ Door hardware is of type that requires twisting of wrist ▪ Door closing time issues: • Doors close 1 to ½ second faster than what code regulates ▪ Door landing issues, such as cross slope exceeding 2%, cracked elevation of 3/8" ▪ Door threshold – problem exists when door opens out to patio, scrapes against threshold, cannot measure door closing time • Senior Complex o Doors ▪ Door pressure issues throughout senior complex, ranging from 9 to 15 lb ▪ Door closing time fails both ADA and CBC codes ▪ Door landing, ½" crack elevation, landing slopes exceed 2% ▪ Door thresholds exceeding maximum height ▪ Door encroaching into landing, electrical obstruction in the way ▪ Door closer not attached at west pool exit, door closing time not able to be measured o Counters ▪ Depth doesn't meet minimum requirement ▪ Height at several counters exceeds maximum requirement o Stairs ▪ Exterior stairs at pool exit do not have contrasting striping at		

DRAFT

bottom riser and top riser o Elevators ▪ No tactile star ▪ Elevator handrail height exceeds maximum requirement • Theater o Doors ▪ Door closing time issues, fails ADA/CBC codes ▪ North entrance door to theater, cannot close on its own, gets stuck to carpet ▪ Door pressure issues, ranging from 6 to 18 lb ▪ Door landing issue, does not meet width requirement ▪ Door maneuvering clearance to amphitheater at 4” ▪ Alcove doors with virtually no clearance ▪ Side note: amphitheater does not have accessible route for seating o Walkways ▪ Walkway between seating 5.3% at bottom and 6.4% at top o Seating ▪ Total number of seats = 795 ▪ Room for approximately 10 accessible spots in front side rows, although not “specified” with signage o Stairs ▪ Stairway not continuous at intermediate landing ▪ Rail clearance from wall less than 2” ▪ Floor identification signage missing (Braille, appropriate height) ▪ Stage staircase issues at both ends, namely rail extension length (less than 12”) and not parallel to surface, rail height and contrasting striping at bottom/top riser ▪ Basement staircase width does not meet minimum requirement o Elevators ▪ Basement elevator • Depth issues, width okay ▪ East elevator • No tactile present on first floor • No hall lantern • Fine Arts o Doors		

DRAFT

▪ Threshold exceeds maximum height ▪ Door timing issues in second floor arts room, dance studio, green room ▪ Doors pressure exceeding maximum force ▪ Several hallway doors with opening widths below 26” ▪ Green room door has no closer o Stairs ▪ Contrasting striping ▪ Riser uniformity issue off by ½” ▪ Directional signage not present ▪ Stable and firm ground level ▪ Rail extension (top/bottom) (essentially 0”) ▪ Landing issue at the exterior stairs near north main entrance, slope > 2% • Swimming Pool o Deck ▪ Slope exceeds 2%, which is maximum ▪ Distance of centerline from seat to edge of deck does not meet minimum ▪ Rail height does not meet minimum requirement ▪ Handrail extension is below 12” ▪ Requirements for toilet rooms in “Toilet Room” section of Senior Complex ▪ Door pressure 15 lb and gets stuck on threshold o Locker Rooms/Showers ▪ No handheld sprayer with hose present ▪ Folding seat inside shower area is missing ▪ Roll-in shower area ▪ Bench depths all are at 17”, fails depth minimum ▪ Hook exceeds maximum of 48” inside shower area		
<u>Priority 3 – Toilet Rooms</u> • Conference/Administration o Bathroom signage not present at door/wall (unisex, pictogram, or Braille) o Minimum clearance on accessible route inside room not met o Lavatory heights either exceed maximum or don’t meet minimum o Lock hardware missing in toilet stalls o Stall door opening width minimum not met	E$55,000	2020–2022

DRAFT

o Stall doors are not self-closing o Toilet paper dispenser exceeds distance from both wall and water closet o Flush control pressure exceeds maximum o Clearance from wall – side & rear grab bars o Hook missing o Piping underneath lavatory not allowing enough clearance (toe/knee) o Mirror height exceeds maximum o Water closet proximity to wall issue o Clearance issue between water closet and lavatory o Hazard caused by outlet near lavatory o Urinal flush control exceeds maximum height o Urinal lip height issues (both kids and adult) • Kirst Hall o Door pressure issue @ 7 lb o Door maneuvering clearance (both men's and women's) o Toilet paper dispenser location from water closet @ 1" • Senior Complex o Door closing time less than 4 seconds o Door pressure exceeds maximum o Bathroom signage not present at door/wall (pictogram, Braille, or both) o Door maneuvering clearance on latch side not met o Vestibule with doors in series fails clearance requirement when fully opened o Hooks on door exceed maximum height o Mirror height at 41" for men's and women's o Dispenser height is at 45" does not meet requirement o Lavatory height exceeds maximum @ 35" o Distance from wall to centerline of lavatory o Clearance underneath lavatory; distance from wall to pipe edge exceeds maximum o On some lavatories, piping is not insulated o Door stalls not self-closing o Door stile clearance exceeds 4" o Rear grab bar clearance from wall not compliant o Rear grab bar length, either on "closed" side or "open" side, not compliant		

DRAFT

o Side grab bar length not compliant o Grab bar height exceeds maximum o Clearance between rear grab bar and objects above is not sufficient o Flush control is on "closed" side o Toilet paper dispenser height exceeds maximum o Toilet paper dispenser location from water closet exceeds range of 7–9" o Clearance from water closet tip to door is not sufficient o Distance from centerline of water closet to wall doesn't meet 18" • Theater o Door pressure exceeds maximum o Door closing time exceeds maximum o Hooks are at above maximum height allowed o No accessible stall in toilet room adjacent to dressing room o No accessible shower o Urinal width clearance does not meet minimum requirement o Urinal lip height exceeds maximum o Flush control height exceeds maximum o Depth from wall to lip does not meet minimum requirement • Fine Arts o Bathroom signage missing (pictogram, Braille, or both) o Door closing time issues @ entrance o Lavatory depth fails @ 28" o Knee/toe clearance issues underneath lavatory o Mirror height exceeds maximum o Stall doors are not self-closing o Stall door hardware requires twisting o Hook either too high or missing in stalls o Maneuvering door clearance issues at stall or toilet room entrance o Water closet centerline distance to wall is incorrect o Rear grab bar length/height issues o Side grab bar distance from wall incorrect and height issues o Toilet seat height @ 15–16.5"; incorrect height o Toilet paper dispensers from rear wall exceed maximum o Toilet paper dispensers from water closets exceed maximum o Flush control on closed side o Soap dispenser too high o Urinal width clearance @ 26"		

DRAFT

o Folding seat height in shower room fails minimum height o Depth clearance inside toilet stall not compliant		
Priority 4 – Additional Access • Conference/Administration o Paper towel dispenser inside kitchen/lavatory area at 55” • Senior Complex o Drinking fountains ▪ Height at spout exceeds maximum @ 37” • Fine Arts o Drinking fountains ▪ Drinking fountain spout height exceeds maximum • Playground o No accessible ramp leading to the play area from the accessible path/walkway	$10,000	2020–2022
Lodi Public Library **201 W. Locust Street**		
Barriers Identified	**Cost Estimate**	**Timeline**
Priority 1 – Approach and Entrance • Front parking has a 3% slope • No $250 signs • Striping is not hatched	$50,000	2020–2022
Priority 2 – Access to Goods & Services • Staff Room sink is not compliant • No maneuverability in Staff Room • Desks in Staff Room have no clearance underneath	$11,000	2023–2025
Priority 3 – Toilet Rooms • Soap dispensers go off at random times • Mirrors are too high • Bathroom doors require more than 10 lbs of force to open • Bathroom doors close in under 5 seconds (average of 3 seconds) • Coat hooks in the (office) bathrooms are too high • Sinks do not have a clear area	$24,000	2023–2025
Priority 4 – Additional Access • Obstructed inside staff kitchen area • No clearance in staff kitchen area	$20,000	2023–2025
Municipal Service Center (MSC)		

DRAFT

1331 S. Ham Lane		
Barriers Identified	**Cost Estimate**	**Timeline**
Priority 1 – Approach and Entrance • Parking stall has a slope of 2.2% • No clear path of travel to the joining MSC buildings • Add $250 sign outside of fleet service • Replace "Van Accessible" sign • Ramp to Electric Utility is @ 8.7% • Electric Utility's main entrance is not accessible • No signage • None of the mats throughout the entire facility are secured	$40,000	Dec. 2018
Priority 2 – Access to Goods & Services • All have routes but they are not compliant • Route in main offices are @ 29" • Eating area in fleet service is @ 32" • Multiple obstructions • Handrails outside Electric Utility do not extend to the minimum 12" • Main Office-Hallway door @ 28"; warehouse-Closet door @ 28" • Door in the main office leading to the hallway has no maneuvering clearance • List and location of failing switches is in the report	$70,000	2019–2022
Priority 3 – Toilet Rooms • No signs to direct to accessible bathroom • Routes are not accessible • Bathroom at warehouse requires twisting of the wrist • Bathroom doors at Fleet Shop, Warehouse, Electric Utility, and Main offices do not meet standards • Fix coat hook at unisex bathroom in the Main Office • Men's Fleet Shop bathroom @ 11" • Pipes in warehouse bathroom are not covered • Repair electric Utility- Bathroom in the men's locker room • Bathrooms at the fleet shop have no closers	$12,000	2019–2022
Priority 4 – Additional Access • The fire alarm systems have no flashing lights.	$13,000	2020–2022

DRAFT

Parks & Recreation Field Office **125 N. Stockton Street** **Parks & Recreation Annex** **111 E. Elm Street**		
Barriers Identified	**Cost Estimate**	**Timeline**
Priority 1 – Approach and Entrance • Access aisle is not hatched in contrasting colors • North warehouse parking exceeds 2% • Access aisle does not adjoin an accessible route; ends at wall • No "$250.00" minimum fine • No "$250.00" minimum fine signage • Direct access to Mojica's batting cage and Parks and Rec. annex is not available • Running slope needs to be redone for south side entrances for the warehouse • Both entrances to warehouse are not accessible • Both entrances to Mojica's are not accessible • Secondary entrance to CrossFit is nog accessible • No signage directing to an accessible entrance • No signage indicating accessible entrance • North warehouse doors have a slope of 6.5%; 60" moving space not available • Thresholds at the warehouse doors do not meet the requirements • Hardware at the parks annex is not compliant • All mats on location are not secured to the ground	$100,000	2020–2022
Priority 2 – Access to Goods & Services • Entrance to main office provides access but is not compliant • Obstructions in warehouse reduce required width of circulation path • Objects protrude into circulation paths in warehouse and in main office • All interior doors in main office and the back door to the warehouse are less than required width • No maneuvering and latch side clearance space in several locations throughout the buildings • Door hardware does not comply in the main office and in the warehouse • Storage areas in warehouse and back rooms in storage areas have objects that reduce required aisle width	$36,000	2023–2025

DRAFT

• Lack of clear floor space approaching light switches and other systems, and switches locations above maximum height in several areas in main office, in storage rooms		
Priority 3 – Toilet Rooms • No signage directing to accessible bathrooms in Parks and Rec. Annex • No Braille signs for toilet rooms in Parks and Rec. Annex • Inadequate front approach to pull side of the door in main office (women's) and warehouse (both) • Main building and warehouse have threshold problems, exceed ¼" • All bathroom door hardware in the main building and warehouse need to be replaced • No coat hook for warehouse bathroom • Warehouse toilet rooms lack clearances for lavatories	$17,000	2023–2025
Priority 4 – Additional Access • Lack of floor clearance for approach to drinking fountain in CrossFit • There is a fire alarm system, but no flashing lights or audible signals	$10,000	2019–2022
Parks & Recreation Annex ***Leased Space to CrossFit and Mojica's Batting Cages*** **111 E. Elm Street**		
Priority 1 – Approach and Entrance • Direct access to Mojica's batting cage and Parks and Rec. annex is not available • Entrance for Mojica's batting cages is not accessible. • Secondary entrance to CrossFit is not accessible • No signage directing to an accessible entrance • All mats on location are not secured to the ground	$54,000	2026–2028
Priority 2 – Access to Goods & Services • Entrance to main office provides access but is not compliant • Objects protrude into circulation paths in CrossFit • Room identification signage is noncomplaint at CrossFit and Mojica's • All interior doors in Mojica's are less than required width • No maneuvering and latch side clearance space in several locations throughout the buildings • Door hardware does not comply in Mojica's • Lack of clear floor space approaching light switches and other systems, and switch locations above maximum height in several areas in CrossFit and Mojica's	$40,000	2026–2028

DRAFT

• Hand control: switches for the batting machine at Mojica's; switches for heater and fans at CrossFit • During competitions at CrossFit, there are no designated spaces for wheelchairs • CrossFit has benches in dressing rooms, but does not have spaces on the end for wheelchairs • Mojica's batting cages is at 38"; CrossFit is at 43.5" • CrossFit does not have a front or parallel approach to the service counter		
Priority 3 – Toilet Rooms • No signage directing to accessible bathrooms in Mojica's batting cage • No Braille signs for toilet rooms in Mojica's • No closers on doors at Mojica's • No coat hook for Mojica's batting cage • Knee clearance for lavatories: 6" of leg space at CrossFit; 3" of leg space at Mojica's • Mojica's has no protection from contact for lavatory drains • Faucet in CrossFit requires more than 5 lb of pressure • Mojica's paper towel dispenser is at 49" – 1 inch above maximum allowed height • Water closet centerline between 16 and 18 inches: Mojica's is at 19", CrossFit is at 19" • Toilet paper dispensers beyond required distance: CrossFit is at 11", Mojica's is at 12"	$18,000	2026–2028
Priority 4 – Additional Access • Lack of floor clearance for approach to drinking fountain in CrossFit • There is a fire alarm system in both, but no flashing lights or audible signals	$10,000	2026–2028
Transit Station **24 S. Sacramento Street**		
Barriers Identified	**Cost Estimate**	**Timeline**
Priority 1 – Approach and Entrance • Numerous gaps and gratings throughout accessible routes from the public right-of-way and from public transportation • Excessive cross slope along accessible routes from the public right-of-way and from public transportation • No accessible paths from the public right-of-way to each Amtrak boarding platform • Abrupt elevation changes along the accessible routes from the public right-	—	—

DRAFT

of-way • Sidewalk narrows more than allowed along accessible routes from the public right-of-way • Protruding objects and head clearance issues along the circulation paths from the public right-of way • Surface conditions along the circulation paths from the public right-of way and from public transportation are in bad repair • Excessive cross slope from accessible parking • Passenger Loading Zone is not marked to discourage parking and is overlapping the vehicular way • Passenger Loading Zone slope exceeds 2% maximum • Passenger Loading Zone lacks sufficient accessible loading for each continuous 100 feet of loading area • No accessible route from the bus stop to an accessible station entrance • Bus boarding area has a different slope than the adjacent roadway • Less than 60% of the public entrances are accessible • Some perpendicular curb ramps do not have a flush transition at the bottom • Corner curb ramps do not have a flush transition at the bottom, and there are changes in the levels • Slopes exceed 2% at exterior landing at Door "A" at front of station building • Slopes exceed 2% at exterior landing at Door "A" at station building platform side • Insufficient pull side maneuvering space at Door "A" • Station entrances lack accessible tactile and visual signage • Informational and directional signage is too small • Station identification signage is not compliant		
<u>Priority 2 – Access to Goods & Services</u> • Gaps and gratings along the accessible routes to and between interior public use areas • No accessible route from each accessible station entrance to each Amtrak boarding platform • Train brochures are not within accessible height in the station waiting room • Counter and display case protrude more than 4" into the station waiting room	—	—

DRAFT

• Fire alarm pull station is not within accessible height in the station waiting room • Ticket counter lacks minimum knee clearance height and toe clearance height and depth		

<u>Priority 3 – Toilet Rooms</u>
• Women's Restroom
  • Lacks an accessible privacy lock
  • Opening force and closing speed of door exceed allowable limits
  • Hand dryer protrudes farther than allowed
  • Baby changing station is not accessible due to height and inadequate clear floor space for forward approach
  • Mirror at lavatory is mounted above allowable height
  • Soap dispenser is not accessible due to force needed to operate
  • Water closet compartment lacks minimum width
  • Flush is not on open side
  • Rear grab bar lacks adequate clearance
  • Side grab bar lacks adequate clearance
  • Seat protector dispenser is not adjacent to clear floor space
• Men's Restroom
  • Lacks an accessible privacy lock
  • Opening force and closing speed of door exceed allowable limits
  • Hand dryer protrudes farther than allowed
  • Mirror at lavatory is mounted above allowable height
  • Soap dispenser is not accessible due to force needed to operate
  • Water closet compartment lacks minimum width
  • Rear grab bar lacks adequate clearance
  • Side grab bar lacks adequate clearance
	—	—

<u>Priority 4 – Additional Access</u> • Drinking fountain outside of station does not provide a high enough water arc • Payphone on exterior of station is not equipped with volume control or a volume symbol • Payphone is not accessible due to reach height and handset cord length • Audible announcements are not provided in a visual format • Real-time messaging is not provided in both audio and visual formats	—	—
White Slough		

DRAFT

12751 N. Thornton Road		
Barriers Identified	**Cost Estimate**	**Timeline**
Priority 1 – Approach and Entrance • Signage - The bottom of the sign is not above 60" • The handrails are not 12" from the edge • Handrails do not extend at least 12” beyond the inside face of the handrail, and there is no curb or barrier that prevents the passage of a 4-inch diameter sphere • No alternative accessible entrance • Door closer does not close at 5 seconds • Mats are not secured	$36,000	December 2018
Priority 2 – Access to Goods & Services • Mounted First Aid box protrudes into the circulation path • Door hardware is not compliant • Doors to men’s and women's restroom require more than 5 lb of force • Men’s and women's restroom doors close in under 5 seconds • No clear floor space to approach light switches • No clearance to accessible seating in break room • No back support and bench is too low in men’s locker room • Front counter exceeds 36” height; no accessible counter space	$25,000	December 2019
Priority 3 – Toilet Rooms • No toe clearance at women’s lavatory	$10,000	2020–2022
Priority 4 – Additional Access • No flashing lights for fire alarm system	—	—
Beckman Park **1426 W. Century Blvd.**		
Barriers Identified	**Cost Estimate**	**Timeline**
Priority 1 – Approach and Entrance • All parking is along the sidewalk • The sidewalk is stable, but not the grass • The main entrance is not accessible • No alternative entrance • No proper hardware on the doors	$150,000	2026–2028
Priority 2 – Access to Goods & Services • No goods or services at Beckman Park	—	—
Priority 3 – Toilet Rooms	$10,000	2023–2025

DRAFT

• There is 6.5” of space • The center of the waterline is 18.5” from the wall		
Priority 4 – Additional Access • None	—	—
Blakely Park **1050 S. Stockton Street** ***Including the Boys and Girls Club and the Enze Pool Facility***		
Barriers Identified	**Cost Estimate**	**Timeline**
Priority 1 – Approach and Entrance • No accessible parking for the pool house or baseball fields • No contrasting colors on the striping • Accessible parking areas have slopes greater than 2% in all directions • No $250 sign on-site • No van accessible sign • Path is not 60" wide, and there is no 60 x 60 space along the path of travel • Approaching slope is greater than 5% • No alternative entrance that is open to the public • Inaccessible entrances do not have signs that point to the nearest accessible entrance • No accessible sign at the point of arrival • Front approach has a slope of 2% and greater • Blakely Park Pool House and the Upstart entrances do not have the proper hardware • Doors close in under 5 seconds • The mats are unsecured to the ground	$20,000	2016–2019
Priority 2 – Access to Goods & Services • No signage designating permanent rooms • No signage designating interior rooms • Door does not open fully to a 90 degree angle • There is not 18" of clear space to open the door • Threshold is higher and steeper than 5% • Doors not equipped with proper hardware • Hardware is lower than 34" • All entrance, office, bathroom, and doors to the basketball court require more than 5 lbs of pressure • Some doors have no closers and other close in under 5 seconds	$20,000	2020–2022

DRAFT

• There is not 36" of clear space in the student room and teen center • Carpet is not secured to the ground • No designated seating at the Boys and Girls Club for wheelchairs • Space requirements are not met • Dimensions are not met under the tables • The benches are not fixed to the wall and there is no space next the benches • The sale service counter is higher than 36" • The accessible countertop at the Boys and Girls Club does not extend the same length as the countertop		
Priority 3 – Toilet Rooms • Entrances to the pool house bathrooms have slopes greater the 3% • Problems with the signage: no Braille, not on latch side, no clear side on latch side of the door, and the sign is higher than 60" • Inside of the bathroom does not have clear maneuvering clearance on a forward approach • Five pounds of pressure is needed to open the door • Doors close in under 5 seconds • Mirrors are higher than 40" from the ground at the pool house bathrooms • Coat hook is at 68" in the Upstart adults bathroom and 72" at the pool house bathrooms • The Upstart bathrooms do not have a clear approach to the lavatory • All bathrooms fail except M1 and W2 • Both bathrooms at the pool house have 8" under the sink • All bathrooms have piping that is 6" or more from the wall at the Boys and Girls Club and the pool house • Bathrooms do not have pipe coverage • The faucets at the pool house need twisting of the wrist to turn on • Soap dispensers too far from the edge of the sink in the kids Upstart bathroom; soap dispenser is too high off the ground in M1 and W1 • Paper towel dispensers at the pool house are higher than 48" and need tight grasping to operate • The rim is 20" away from the wall in the men's bathroom, pool house • All bathrooms do not have grab bars exceeding the minimum 54" long • Women's 2 bathroom and the women's pool house do not meet the requirements for the bar spacing behind the lavatory • The bathroom for the kids Upstart bathroom does not have the flush	$25,000	2016–2019

DRAFT

control on the open side • All toilet paper dispensers are too far from the rim of the toilet • The germ protector is too high from the ground at 57" • The stall door in W3 is not self-closing		
Priority 4 – Additional Access • Two water fountains need clear space for the approach • The water fountain at the kids Upstart is at 8" • Controls for the water fountains need to be fixed	$7,500	2020–2022
Candy Cane Park **1324 Holly Drive**		
Barriers Identified	**Cost Estimate**	**Timeline**
Priority 1 – Approach and Entrance • No parking for an accessible handicap spot • There is an accessible curb ramp • There is no alternative entrance	$50,000	2023–2025
Priority 2 – Access to Goods & Services • None	—	—
Priority 3 – Toilet Rooms • None	—	—
Priority 4 – Additional Access • None	—	—
Century Meadows Park **1833 Lexington Drive**		
Barriers Identified	**Cost Estimate**	**Timeline**
Priority 1 – Approach and Entrance • No accessible parking spaces • Alternative entrance is not accessible • No signage that indicates the nearest accessible entrance • Not all entrances are accessible and there is no signage to indicate the park is accessible	$175,000	2029–2031
Priority 2 – Access to Goods & Services • None	—	—
Priority 3 – Toilet Rooms • None	—	—
Priority 4 – Additional Access • None	—	—

DRAFT

Century Park **130 W. Century Blvd.**		
Barriers Identified	**Cost Estimate**	**Timeline**
Priority 1 – Approach and Entrance • None	—	—
Priority 2 – Access to Goods & Services • None	—	—
Priority 3 – Toilet Rooms • None	—	—
Priority 4 – Additional Access • None	—	—
Chapman Field/Armory Park **333 N. Washington Street**		
Barriers Identified	**Cost Estimate**	**Timeline**
Priority 1 – Approach and Entrance • All parking is along the street • No designated accessible parking • Parking east of the field, where rocks are everywhere, can be slippery and unstable • West side of the field cannot be worked upon because the sidewalk is not part of Chapman Field • No flares on the curb ramps, but some could use them • No alternative to the "main" entrance at Chapman field • Gate does not have the proper hardware to access alone	$150,000	2020–2022
Priority 2 – Access to Goods & Services • There are no signs designating permanent rooms besides for the bathrooms • There is no space inside the concession stand • The floors inside the concession are not slip resistant • All switches do not have a clear space to be accessed • Stadium seating are pre-built and assembled • The great majority of the concession stand does not meet requirements and expectations; concession stand is not in use and it is recommended	$200,000	2020–2022

DRAFT

that a new one be built.		
Priority 3 – Toilet Rooms • No Braille on the signs • Thresholds in the bathrooms are higher than 1/4 • Doors require more than 5 lbs of pressure to open • Reflection is not clear on the bathroom mirrors • No clearance for the lavatory in the women's restroom • Sink does not meet the 17" minimum requirement • Pipes under the sink do not have proper cover • Sinks require more than 5 lbs of pressure to operate • Soap dispensers are not in operation • Hand dryers require more than 5 lbs of pressure to operate • Toilets are farther than 18" from the wall • Toilets are higher than 19" from the ground • Not a minimum of 12" of grab bar on the closed side of the bathroom • Flusher for the toilets require more than 5 lbs of pressure to operate • Flush control is above the toilet • Toilet paper dispenser is farther than 9" from the rim of the toilet • No continuous flow for the toilet paper • Stall doors are not self-closing • No pulls on both sides of the doors	$200,000	2020–2022
Priority 4 – Additional Access • Ground is not stable under the fountain • Space under the water fountain is not meeting the requirements • Operable parts are less than 20" from the wall to the current position • Fountain needs twisting of the wrist to operate • Spout is not at least 15" from back of the wall • No fountain for a standing person • No fire alarms on-site	$30,000	2020–2022
DeBenedetti Park **2150 S. Lower Sacramento Road**		
Barriers Identified	**Cost Estimate**	**Timeline**
Priority 1 – Approach and Entrance • Entry sidewalk to the south end of the park has a 4.2% slope • Handrails needed at ramps	$75,000	2020–2022

DRAFT

Priority 2 – Access to Goods & Services • None	—	—
Priority 3 – Toilet Rooms • None	—	—
Priority 4 – Additional Access • None	—	—
Emerson Park **11 N. Hutchins Street**		
Barriers Identified	**Cost Estimate**	**Timeline**
Priority 1 – Approach and Entrance • No designated accessible parking, all parking is along the street • Sidewalks are not 60" wide • Running slope for the curbs are steeper than 1:12 • Not a level surface on top of curb	$200,000	2026–2028
Priority 2 – Access to Goods & Services • None	—	—
Priority 3 – Toilet Rooms • No Braille on the bathroom signs • Not a level surface outside the bathrooms • Not enough room in the bathrooms • No pipe coverage • Hand dryers are not in operation • There is not an inch and a half of space from under the grab bar to the toilet paper dispenser • There is not 60" of depth clearance to open the stall door in the men's restroom • Stall doors are not self-closing • There is not pull handles on both sides of the doors	$200,000	2026–2028
Priority 4 – Additional Access • No clearance for a front approach for the water fountain • Only one water fountain on-site, and it's for a standing person	$10,000	2026–2028
English Oaks Commons **2184 Newbury Circle**		
Barriers Identified	**Cost Estimate**	**Timeline**
Priority 1 – Approach and Entrance • All parking is along the street	$150,000	2026–2028

DRAFT

• Exterior entrance has a slope of 8.4% at the entrance • Driveway seems to be in use for curb ramp (east side of the park) • Ramp is at 9.1% • Not a level landing at the top of the curb ramp		
Priority 2 – Access to Goods & Services • None	—	—
Priority 3 – Toilet Rooms • None	—	—
Priority 4 – Additional Access • None	—	—
Glaves Park **2206 Oxford Way**		
Barriers Identified	**Cost Estimate**	**Timeline**
Priority 1 – Approach and Entrance • No accessible parking on-site • *No events take place at the bottom the park, so no need for a walkway inside the park*	$250,000	2023–2025
Priority 2 – Access to Goods & Services • None	—	—
Priority 3 – Toilet Rooms • Signs on the latch of the doors are not centered 18" from the door • Men's bathroom has a trash can outside the maneuvering clearance • Doors require more than 5 lbs of pressure to open • Doors close in under 5 seconds • Hand dryer dispensers do not work	$15,000	2023–2025
Priority 4 – Additional Access • None	—	—
Grape Bowl **221 Lawrence Street**		
Barriers Identified	**Cost Estimate**	**Timeline**
Priority 1 – Approach and Entrance • Path of travel to the bathrooms to the field house is inaccessible • Parking stall next to field house has a slope • Northeast side (visitors side) of the Grape Bowl is not ADA accessible. Starting from the entrance, there is no direct path of travel to seating	$1.25M	2023–2025

DRAFT

(HV04). To have an accessible path to visitor seating, replicating the path to the home side seating is best suggested (HV01, HV07, HV08, HV09, HV10). Replicating the path of travel will result in removing seating (HV05). Suggestion, install new seating on both sides of current seating just like the home side (HV06, HV10). Path of travel on visitors side is not compliant (PT06, PT08). Ramp is needed on visitors side as is on the home side (HV03, HV11). • New hardware needed for entrance doors at the field house and for the back doors		
Priority 2 – Access to Goods & Services • Visitors side needs wheelchair seating • No clearance surrounding the switches in the concession stand • Office at the concession stand is not ADA accessible because there is no clearance for maneuverability	$150,000	2023–2025
Priority 3 – Toilet Rooms • None	—	—
Priority 4 – Additional Access • None	—	—
Hale Park **209 E. Locust Street**		
Barriers Identified	**Cost Estimate**	**Timeline**
Priority 1 – Approach and Entrance • No sign of International Accessibility and no "Minimum $250 sign" • Sign for van accessibility and $250 sign are needed at parking stall • Slope of curb is steeper than 10% • Cross slope is greater than 2% • Top of curb is not leveled and flares are steeper than 10% • There is not 18" of free space on the pull side of the door • No alternative entrance • There is not 18" of free space on the pull side of the door • No closer on door	$100,000	2020–2022
Priority 2 – Access to Goods & Services • Route is not a minimum 36" wide • Protrudes more than 4" into the path of travel • No sign for the party room • No designated seating for people in wheelchairs • No clear path of travel to all seating	$100,000	2020–2022

DRAFT

• No floor space and space under the table for someone in a wheelchair		
Priority 3 – Toilet Rooms • Color of the sign does not contrast with the back, there is no Braille, and there is not a sign on the latch side of the door • Door needs more than 5 lbs of pressure to open • Doors have no closer installed • Sinks are at 8" in length • There is not 8" of knee clearance under the sink • Pipes are not covered • Faucet needs more than 5 lbs of pressure to operate	$300,000	2020–2022
Priority 4 – Additional Access • Water fountain is unsanitary and is recommended to be removed • Water fountain needs more than 5 lbs of pressure to operate • No second water fountain for a standing person • No fire alarm system in the Hale Park party room	$40,000	2020–2022
Katzakian Park **2735 W. Turner Road**		
Barriers Identified	**Cost Estimate**	**Timeline**
Priority 1 – Approach and Entrance • Striping does not contrast • Path of travel is not ADA equivalent, path of travel has a slope of 8.9% • Parking stalls do not have "Minimum Fine $250" signs • Parking does not have "van accessible" sign • Route has a slope of 8.9% • Slope of curbs is at 10% • Cross slopes are greater than 2.1% • No level landings at the top of curbs and the flares are off	$80,000	2020–2022
Priority 2 – Access to Goods & Services • None	—	—
Priority 3 – Toilet Rooms • Bathroom doors need more than 5 lbs of pressure to open • Doors close in under 5 seconds • Sinks do not meet the 17" minimum requirement • Pipes under the sink are not covered	$5,000	2020–2022
Priority 4 – Additional Access • Water fountain requires more than 5 lbs of pressure to operate	$5,000	2016–2019

DRAFT

Kofu Park **1145 S. Ham Lane**		
Barriers Identified	**Cost Estimate**	**Timeline**
Priority 1 – Approach and Entrance • No designated van accessible parking on-site • The access aisle is 4' wide • If there was an accessible van parking spot, the access aisle would not be wide enough • Parking stall has a 3.0% slope • Access aisle has a slope of 8.7% • Curb ramp near Ham Lane has a slope of 8.6% • Top of curb has a slope of 3.1% • There is sign that routes to the nearest accessible entrance • No sign of accessibility at the accessible entrance	—	*Completed 2016*
Priority 2 – Access to Goods & Services • Running slope to the bathrooms is greater than 5%, but there are handrails on the side to make it an accessible ramp • Ramp rises higher than 6" with a slope of 11.6% and 12.5%; cross slope for the concession ramp is 2.6% • Landings at the top and bottom of the ramp are not level • Landing is at 2.6% for the walkway to the skate park • Rails do not extend 12" from the end of the ramp • Bottom of the rail does not meet the 12" minimum requirement from the rail • Door to the party room does not have 18" of clearance for a front approach • No clear landing to the concession stand • Hardware for the concession needs to be replaced • The doors to the concession stand and party room require more than 5 lbs of pressure to open • The doors are not self-closing • No clear floor space for the light switch in the concession stand or the party room • 57" for the A/C control panel • No designated spaces for wheelchair seating • Sales service counter is 42" high	—	*Completed 2016*

DRAFT

• There is not 48" of clearance inside the concession stand adjacent to the service counter • Soda dispenser in the concession stand fails everything		
Priority 3 – Toilet Rooms • Both bathrooms are not accessible • No sign of accessibility outside the bathrooms • There is not 60" of clear depth to a front side approach to the door • The faucets need twisting of the wrist to operate and require more than 5 lbs of pressure to operate • Dimensions are not met in the bathroom stalls • No grab bars behind the toilet • Flush control in the women's bathroom is not on the open side • No continuous flow for the toilet paper dispenser • There is not 60" of depth to the front approach of the stall door in the women's bathroom • Door is not self-closing • No pull handles on the stall doors • Locks require pinching • Stalls are not 60" wide	$200,000	2020–2022
Priority 4 – Additional Access • Water fountain requires more than 5 lbs of pressure • Spout of the water fountain is 6" from the front of the fountain	$10,000	2020–2022
Lawrence Park **350 N. Washington Street**		
Barriers Identified	**Cost Estimate**	**Timeline**
Priority 1 – Approach and Entrance • None	—	—
Priority 2 – Access to Goods & Services • None	—	—
Priority 3 – Toilet Rooms • None	—	—
Priority 4 – Additional Access • None	—	—
Legion Park **835 S. Hutchins Street**		
Barriers Identified	**Cost Estimate**	**Timeline**

DRAFT

Priority 1 – Approach and Entrance • No designated parking to the park; all parking is along the street • Sidewalk is not 60" wide • Running slope for the curb is greater than 1:12 • Top of curb is not leveled • No alternative entrance to the party room • No sign of accessibility outside the room • There is not a level landing out the party room entrance • Lock on the door requires twisting of the wrist • No closer on the door	$175,000	2023–2025
Priority 2 – Access to Goods & Services • No permanent signage for the party room • Switches do not have a clear floor space • Sink inside the party room does not meet the requirements as if it were used in a bathroom	$25,000	2023–2025
Priority 3 – Toilet Rooms • Text does not contrast with the background, and there is no Braille on the signs. The center of the sign is not 9" from the arc of the door, and the sign exceeds the maximum height from the ground to the baseline of the characters. • There is not a minimum of 60" beyond the latch side of the door and is not a level landing outside the doors • Not enough space to maneuver through the privacy wall, into the bathroom • Not enough floor space inside the bathroom • Sink is at 14.5" from the wall to the front • No knee space under the lavatory • No pipe coverage • Faucets need twisting of the wrist to operate • Toilet paper dispenser is farther than 9" from the rim of the toilet • There is not 60" of clear depth when opening the toilet stall door • Stall door is not self-closing • No pull handles on both side of the doors • No locks on the stall doors	$150,000	2023–2025
Priority 4 – Additional Access • None	—	—

DRAFT

Lodi Lake Park **1101 W. Turner Road**		
Barriers Identified	**Cost Estimate**	**Timeline**

<u>Priority 1 – Approach and Entrance</u>
• Parking Lots
  o Accessible parking requirements are not posted throughout the parking lot areas
  o Accessible routes needed throughout the parking lot areas
  o Appropriate signage required throughout
• Water Park
  o Water park does not have a level surface for a front approach
  o Water park does not have proper hardware for entrance
• Maintenance Office
  o Grates are larger than half an inch at the maintenance office
  o No alternative entrance if needed
  o No closers on any of the entrance doors
• Discovery Center
  o Has a mat that is not secured to the ground
	$1.5M	2029–2031

<u>Priority 2 – Access to Goods & Services</u>
• No tactile characters at either the water park or the discovery center
• Maintenance office interior doors cannot open fully to a 90 degree angle
• Interior doors do not have a clear front approach (locations in report)
• Water park interior doors requires more than 5 lbs of pressure to open
• Discovery center does not meet the requirements (in report)
• Light switches do not have a clear front approach (locations in report)
• Water Park
  o Switches are not compliant
  o Handrails for the ramp do not extend past the 12" minimum requirement
  o No tactile characters on room signs
  o The benches inside the women's bathroom (at the water park) have seats that do not meet the requirements of a minimum of 20"
  o Front counter at the water park is higher than 36"
  ▪ The portion on top does not extend the same depth
  ▪ Forward approach is not possible
• Discovery Center
  o No tactile characters on room signs
	$400,000	2029–2031

DRAFT

<u>Priority 3 – Toilet Rooms</u> ▪ Maintenance Office/Front Restrooms o No signage at the maintenance bathroom o Running cross slope greater than 2% o No grab bars o No tactile signage or proper location for sign o Improper door hardware for both men's and women's o Doors require more than 5 lbs of force o No closers on bathroom doors o Clear path not available for hand dryer in men's room o Sink in the maintenance bathroom lacks required clear floor space under the sink o Lack of required knee clearance under the sink in the maintenance office bathroom o Lack of required toe clearance in the maintenance bathroom o Lack of required insulation around drain pipes in maintenance bathroom o Men's and women's hand drying dispensers in the front restrooms are not operable o Paper towel dispenser in maintenance restroom is too high o Toilets in both men's and women's restrooms and the maintenance restroom are not accessible o Side grab bars in the maintenance restroom are not compliant o Size and placement of the rear grab bar for the women's restroom are not compliant o Toilet flush controls require more than 5 lbs of pressure in both the men's and women's restrooms and the maintenance restroom o Toilet flush control in the men's room is not in the correct location. o The stall doors in both the men's and women's restrooms and the maintenance restroom (pull side) do not have operable parts o The men's room stall door does not have the required 18" pull side clearance. ▪ Water Park o No tactile signage or proper location for sign o Improper door hardware for both men's and women's o Doors require more than 5 lbs of force o No closers on bathroom doors	$800,000	2029–2031

DRAFT

o Mirror too high in men's bathroom o Coat hook too high in the men's bathroom o Paper towel dispensers in both the men's and women's restrooms are not accessible o Side grab bars in both the men's and women's restrooms are not compliant o Toilet flush controls require more than 5 lbs of pressure in both the men's and women's restrooms o Toilet paper dispensers pressure in both the men's and women's restrooms do not allow continuous flow o Stall door in the men's restroom requires more than 5 lbs of pressure o Stall doors in both the men's and women's restrooms are not self-closing o Stall doors in both the men's and women's restrooms (pull side) do not have operable parts o Stall in the women's restroom is not at least 60" wide and does not meet the required area o Locker rooms need roll-in showers for wheelchair access ▪ North Restrooms o No tactile signage or proper location for sign o Improper door hardware for both men's and women's o Doors require more than 5 lbs of force o No closers on bathroom doors o Sink is higher than 34" in both bathrooms o Toilets in both men's and women's restrooms are not accessible o Toilet paper dispenser encroaches on grab bar clearance in both the men's and women's restrooms o Toilet flush controls require more than 5 lbs of pressure in both the men's and women's restrooms o Toilet paper dispensers in both the men's and women's restrooms are not within the required reach o Stall doors in both the men's and women's restrooms (pull side) do not have operable parts		
<u>Priority 4 – Additional Access</u> o Water fountains throughout the site are not accessible o No fire alarm systems on-site that meet the requirements	$40,000	2026–2028
Maple Square Park **2 E. Lodi Avenue**		

DRAFT

EVALUATION PENDING		
Barriers Identified	**Cost Estimate**	**Timeline**
Priority 1 – Approach and Entrance	—	—
Priority 2 – Access to Goods & Services	—	—
Priority 3 – Toilet Rooms	—	—
Priority 4 – Additional Access	—	—
Peterson Park **199 Evergreen Drive**		
Barriers Identified	**Cost Estimate**	**Timeline**
Priority 1 – Approach and Entrance • No parking stalls on-site • At the top of the curb, the level landing is at 3.3% • No main entrance to Peterson Park	$175,000	2026–2028
Priority 2 – Access to Goods & Services • Grass is slippery when wet • No walkway inside of the park to the fields • Light switches require more than 5 lbs of pressure to operate • No standing space for someone in a wheelchair to use	$250,000	2026–2028
Priority 3 – Toilet Rooms • No sign of accessibility at either bathroom on-site • No Braille on the signs • Baseline of the signs is higher than 60" from the ground • The total length of the lavatory is 15", not meeting the minimum 17" requirement • Not enough knee space under the lavatory • There is no baggage or covering on the pipes under the lavatory • Faucet requires more than 5lbs of pressure to operate • Hand dryer requires more than 5 lbs of pressure to operate • Rims of the toilets are 15.5" from the ground • Requires more than 5 lbs of pressure to operate • Door doesn't self-close all the way	$50,000	2026–2028
Priority 4 – Additional Access	$5,000	2020–2022

DRAFT

• There is a water fountain, but it no longer works		
Pixley Park **876 E. Vine Street**	**NOT YET DEVELOPED**	
Roget Park **2229 Tienda Drive**		
Barriers Identified	**Cost Estimate**	**Timeline**
Priority 1 – Approach and Entrance • None		
Priority 2 – Access to Goods & Services • Lack of required clear floor space under outdoor tables • No clear space adjacent to benches with back support	$5,000	2016–2019
Priority 3 – Toilet Rooms • None	—	—
Priority 4 – Additional Access • Drinking fountain requires 10 lbs of pressure to operate	—	—
Rosegate Park **2801 Ambrosia Street**		
Barriers Identified	**Cost Estimate**	**Timeline**
Priority 1 – Approach and Entrance • No parking stalls on-site	—	—
Priority 2 – Access to Goods & Services • None	—	—
Priority 3 – Toilet Rooms • None	—	—
Priority 4 – Additional Access • Water fountains require more than 5 lbs of pressure to operate	$0	2016–2019
Salas Park **2001 S. Stockton Street**		
Barriers Identified	**Cost Estimate**	**Timeline**
Priority 1 – Approach and Entrance • Route on the sidewalk is greater than 200' and does not have a 5'x5' passing • Slope is at 5.4% at the entrance • Running slope is at 8.6% • Landing at the curb is at 3.6%, with flares are at between 13% and 15.5%	$150,000	2020–2022

DRAFT

• There are alternative entrances, but they are not compliant • Inaccessible entrances do not have signage that points to the nearest accessible entrance • No sign that indicates the accessible entrance • Gate to the baseball fields does not have the required approach and maneuvering clearance • Gate at the entrance lacks accessible hardware		
<u>Priority 2 – Access to Goods & Services</u> • Running slope to the entrance and to the baseball seating is greater than 5% • Ramp inside the park is 8.4–8.9% and has no rails on the side • All entrances to the baseball seating do not have a clear landing for approach • Threshold for the concession stand is higher than ¼ inch • Lock is higher than 48" from the ground • Door to the snack shop needs more than 5 lbs of pressure to open • Door to the snack shop does not have a closer • No seating for anyone in a wheelchair • Counters are 40" high from the ground	$200,000	2020–2022
<u>Priority 3 – Toilet Rooms</u> • No sign on the latch side of the door • Drain pipes for the sink in the women's restroom are beyond 6" from the wall • Drain pipes for the sinks in both the men's and women's restrooms are not insulated • More than 5 lbs of force is required to activate the faucets in both the men's and women's restrooms • Toilets in both the men's and women's restrooms are lower than 17" from the ground • Side and rear grab bars are not positioned correctly • Toilet flush control requires more than 5 lbs of pressure to flush • Toilet flush controls in both the men's and women's restrooms are located above the toilet, and not on the open side • Toilet paper dispensers in both the men's and women's restrooms extend more than 9" from the rim • Toilet paper dispensers in both the men's and women's restrooms do not have continuous flow	40,000	2020–2022

DRAFT

• Stall doors in both the men's and women's restrooms are not self-closing • There is not proper hardware for the stall doors in both the men's and women's restrooms • Locks on the stall doors are not accessible		
Priority 4 – Additional Access • D fountains throughout the facility are not accessible	$5,000	2020–2022
Softball Complex **401 N. Stockton Street**		
Barriers Identified	**Cost Estimate**	**Timeline**
Priority 1 – Approach and Entrance • Cross slope is at 2.4% • Slope at the top of the curb is at 2.3% • No alternative entrance • No signage to direct to the nearest accessible entrance • No sign of accessibility at the main entrance • Entrance at the gate does not have the proper hardware	—	*Completed*
Priority 2 – Access to Goods & Services • The route has some really worn out cement on the path of travel • No signage designating permanent rooms • Light switches in the concession stand are higher than 48" • There is no assigned or designated seating for people in a wheelchair • All seating that has tables, outside the park, does not have one accessible space for someone in a wheelchair • Service counter is higher than 36" from the ground	$100,000	2020–2022
Priority 3 – Toilet Rooms • No Braille on the signs • Center of the bathroom signs do not meet the minimum 9" from the latch side of the door • Doorway threshold rises more than 1/4 inch • Doors are left open by being locked to the wall • Mirror above the lavatory is higher than 40" • Pipes under the sink are not covered • Parts for the faucet require more than 5 lbs of pressure to operate • Requires more than 5 lbs of pressure to operate the flush control • Toilet paper dispenser is more than 9" from the rim	$250,000	2020–2022

DRAFT

• No continuous flow in the women's bathroom • There is not 60" of clearance on the pull side of the door • Doors are not self-closing • Doors do not have pulls on both sides of the door		
Priority 4 – Additional Access • Water fountain requires more than 5 lbs of pressure to operate • Spout does not meet the 15" minimum from the rear of the wall • No second water fountain for one standing person	$5,000	2020–2022
Van Buskirk Park **600 N. Pleasant Street**		
Barriers Identified	**Cost Estimate**	**Timeline**
Priority 1 – Approach and Entrance • No parking stalls on-site	—	—
Priority 2 – Access to Goods & Services • No accessible path to the seating	$75,000	2023–2025
Priority 3 – Toilet Rooms • None	—	—
Priority 4 – Additional Access • None	—	—
Vinewood Park **1824 W. Tokay Street**		
Barriers Identified	**Cost Estimate**	**Timeline**
Priority 1 – Approach and Entrance • No accessible path of travel from the public right-of-way to the other points in the park • Gates are not wide enough • Gate hardware is not accessible	$250,000	2023–2025
Priority 2 – Access to Goods & Services • None	—	—
Priority 3 – Toilet Rooms • No accessible bathroom on-site • Route is not accessible • No tactile signage • Not enough clear space on the latch side of the door • Sign is higher than 60” • No maneuvering clearance to open the door	$400,000	2026–2028

DRAFT

• Threshold is more than ¼ inch • Doors are not equipped with operable hardware • Stall door requires more than 5 lbs of pressure • Not enough room in the restroom • Coat hook is higher than 48” • Not enough knee clearance under the sink in either the men’s or women’s restroom • Not enough toe clearance under the sink drain in either the men’s or women’s restroom • No drain pipe insulation • Faucet requires greater than 5 lbs force • Toilets are not accessible in both the men’s and women’s restrooms • Not enough space in the stalls • Height of the toilet is higher than 19” • Toilet paper dispenser is too close to bar; not enough space between the bar and the wall • No grab bar behind the toilet • Force to flush is greater than 5 lbs • No continuous flow of paper • Stall doors are under 32” wide • No space on the pull side • Door is not self-closing • No pulls on the doors • Latch requires pinching • Component is less than 60” wide in both the men’s and women’s restrooms • Stall is under 59” deep • Stall does not meet the requirements		
Priority 4 – Additional Access • Requires more than 5 lbs of force • Fountain is not 15” from the rear • Bottom of the fountain is not at least 27” from the ground	$5,000	2026–2028
Zupo Park **350 N. Washington Street**		
Barriers Identified	**Cost Estimate**	**Timeline**
Priority 1 – Approach and Entrance	$200,000	2016–2019

DRAFT

• No parking on-site; all parking is along the street • Exterior route is all along the street sidewalk • Curb is running at 16.7% • There is an alternative entrance, but it's not compliant; it can be used during the same hours, but not independently • All inaccessible entrances do not have signage that direct to the nearest accessible entrance • Main entrance does not have a sign of accessibility • Main entrance is a gate that is left open when park is in use • Gate does not have the proper hardware		
<u>Priority 2 – Access to Goods & Services</u> • Path is stable, but there is a lot of cracking • No signs designating permanent rooms besides for the bathroom • Door to the freezer in the concession stand is not at least 32" wide • Front approach to the freezer does not have 18" of space • Threshold to the back door in the concession stand and the inner doorways in the concession stand are higher than 1/4 inch • All doors at Zupo Field need to have their hardware replaced • All doors need 5 lbs or more pounds of pressure to open • Doors do not have closers • Light switches in the concession stand do not have a clear approach • Light switch in the freezer needs to replaced • The overall space of seating is unknown; there are two spaces on the ground for wheelchair seating • There is not a companion seat for each wheelchair space • Counter is higher than 36" • Does not meet the requirements for a forward approach • Inside of the concession stand is not compliant overall	$550,000	2016–2019
<u>Priority 3 – Toilet Rooms</u> • Cross slope at the door way is at 2.4% • No Braille on signs. There is a sign on the latch side of the doors, but it is painted on. Signs are not on the latch side of the door but in front of it. • Bathroom doors do not have operable parts • Requires more than 5 lbs of pressure to open • Mirror is 41" from the ground • Front lavatory is higher than 34"	$300,000	2016–2019

DRAFT

• There is 4" of space under the sink • Pipes are farther than 6" from the wall • Pipes are not covered below the lavatory • Requires more than 5 lbs of pressure to operate • Center line of the water is farther than 18" from the side wall • Rim of the toilet is lower than 17" • Grab bar above the toilet does not have the measurements needed • Women's toilet flusher is not on the open side • Toilet paper dispenser is too far from the rim of the toilet • Does not have 60" on the depth side • Doors are not self-closing • No pull bars on the stall doors • Locks on the stall doors are operated with a pinch and twist • Stalls are not 60" wide • Stalls do not meet the dimension requirements		
<u>Priority 4 – Additional Access</u> • None	—	—
TOTAL	**$10,311,000**	

DRAFT

Appendix D: Public Rights-of-Way City Standards Details

CITY OF LODI

PUBLIC WORKS DEPARTMENT

STREET SECTIONS

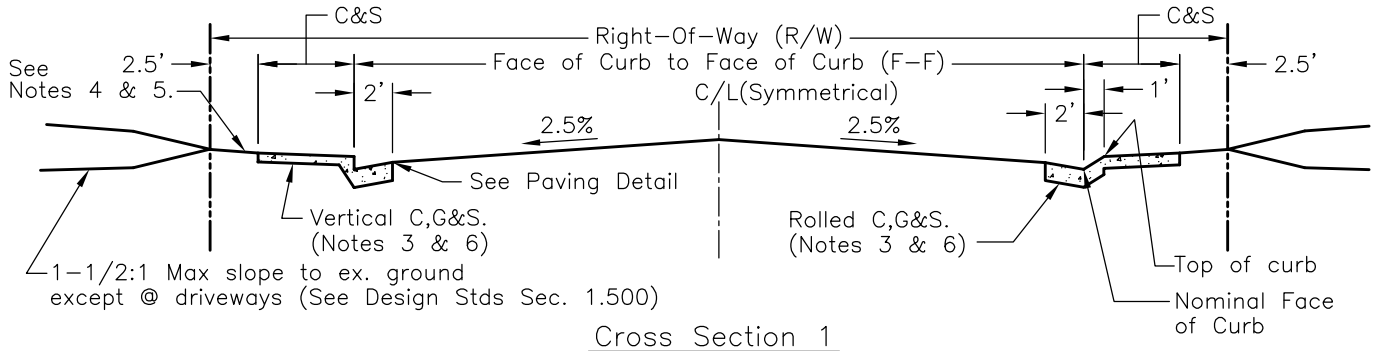

Cross Section 1

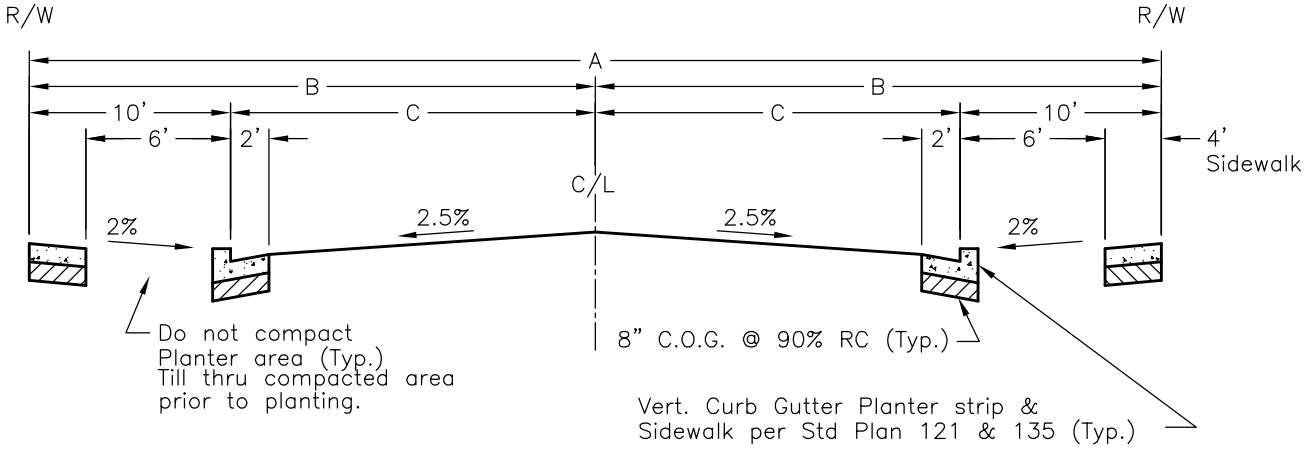

Cross Section 2

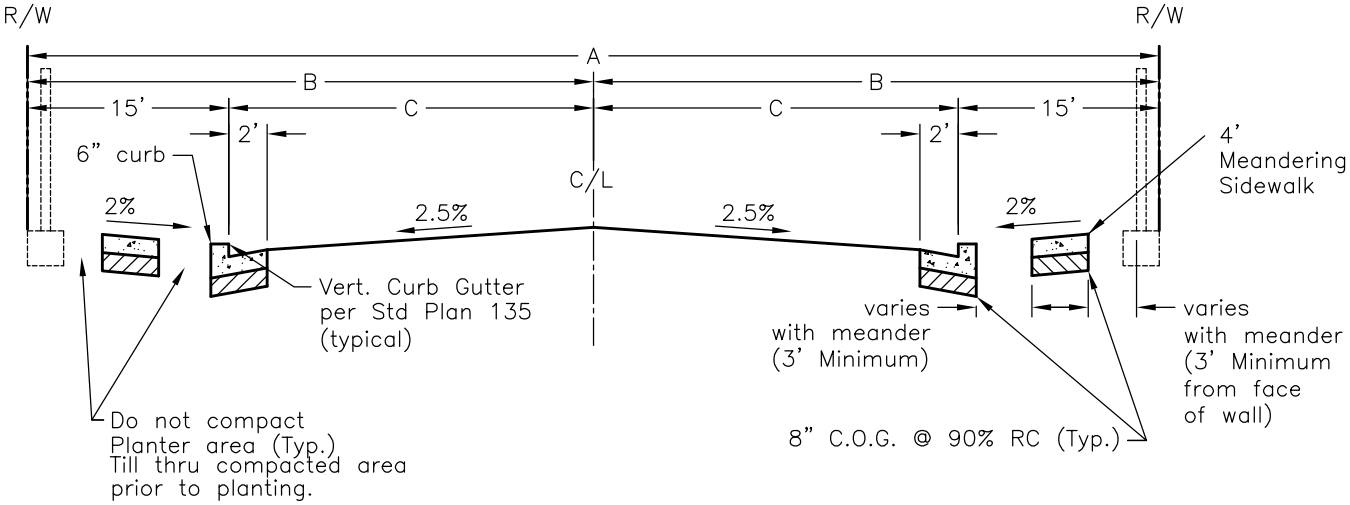

Cross Section 3

Sheet 1 of 2

Dr. KT	No.	Date	Revision	Appr.
Ch. WS	1	2/05	ADDED CROSS SECTION 3	
Date 12/00				

Approved By: F. Wally Sandelin, City Engineer, R.C.E. 39895 — 2/2/05 Date

STD PLAN 101

CITY OF LODI

PUBLIC WORKS DEPARTMENT

Street Sections

Section Dimension Table

Street Classification	(A) R/W	(2xC) F–F	Min. C&S	Cross Section	Structural Section
Minor Residential	50'	34'	5.5' Rolled	1	A
Minor Residential	50'	30'	4.0' sidewalk SW w/ 0.5' Vertical curb	2	A
Standard Residential	55'	39'	5.5' Rolled	1	A
Standard Residential	55'	35'	4.0' sidewalk SW w/ 0.5' Vertical curb	2	A
Minor Collector	60'	44'	5.5' Vertical	1	B
Major Collector	68'	52'	5.5' Vertical	1	B
Industrial (Local)	66'	52'	4.5' Vertical	1	B
Secondary Arterial Four–Lane Undivided	80'	64'	5.5' Vertical	1	B
Minor Arterial Four–Lane Divided	94'	78'	5.5' Vertical	1	B
Major Arterial Six–Lane Divided	118'	102'	5.5' Vertical	1	B
Minor Arterial w/ RW frontage wall	108'	78'	4.0' meandering SW w/ 0.5' Vertical curb	3	B

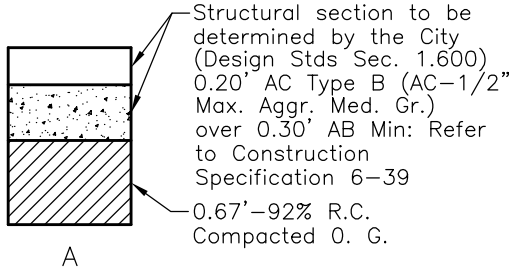

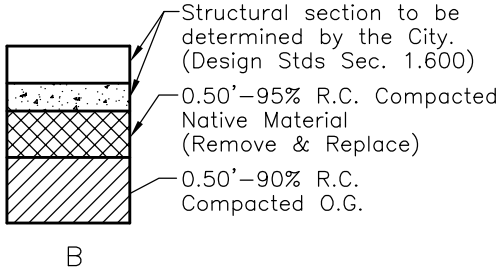

Structural Section

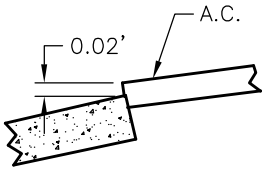

Paving Detail at TOE

Notes:

1. See City Public Improvement Design Stds. Sec. 1 for general design requirements.
2. Widening at intersections to provide additional lanes may be required.
3. See Std. Plans 135 and 136 for Vertical and Rolled C,G&S respectively.
4. The area between the R/W and back of sidewalk and between face of walk and back of curb shall be graded to 0.02' per ft. Where wider sidewalk is required (ie. commercial areas, around hydrants, poles etc) sidewalk specifications apply.
5. Private use of the R/W subject to Encroachment Permit requirements and Design Standards Sections 1.400 & 1.500.
6. See Design Stds. Section 1.500 for curb & gutter type criteria.

Dr. KT	No.	Date	Revision	Appr.
Ch. WS	1	2/05	ADDED MEANDERING WALK	
Date 7/08				

Approved By: F. Wally Sandelin, City Engineer, R.C.E. 39895 — 2/2/05 Date

STD PLAN 101

CITY OF LODI

PUBLIC WORKS DEPARTMENT

Special Commercial Driveway

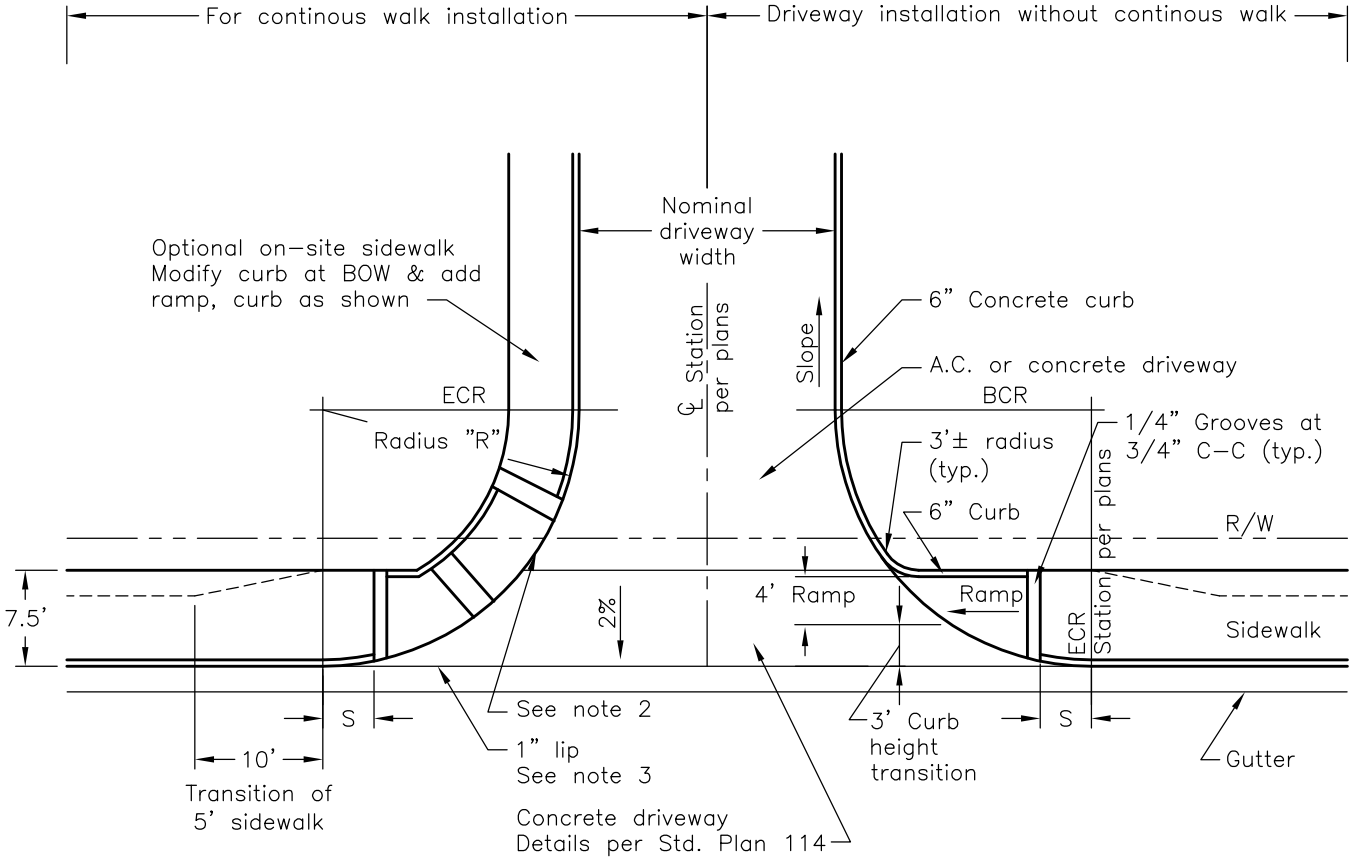

Plan

"R"	"S"
15'	3'
20'	4'
25'	5'
30'	6'
35'	7'

Notes:

1. Special Commercial Driveway to be used only where required or specifically approved by the Public Works Director.
2. See Std. Plan 132 for wheelchair ramp details.
3. Provide in-line catch basin if depth of flow in gutter exceeds 3".

Dr. KT	No.	Date	Revision	Appr.	Approved By:	STD PLAN
Ch. WS					F. Wally Sandelin 12/28/00	111
Date 12/00					F. Wally Sandelin, City Engineer, R.C.E. 39895 — Date	

CITY OF LODI

PUBLIC WORKS DEPARTMENT

Square–Type Curb, Gutter, Sidewalk and Residential Driveway

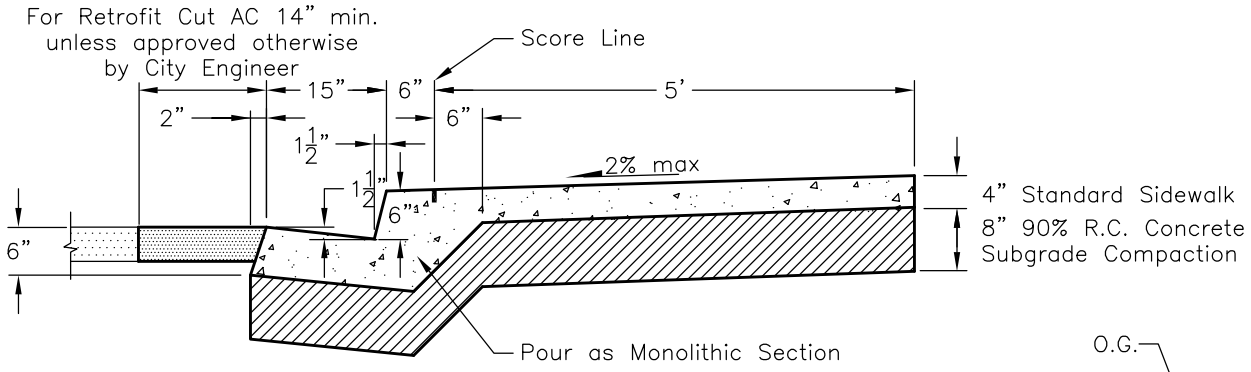

Curb, Gutter, & Sidewalk Section

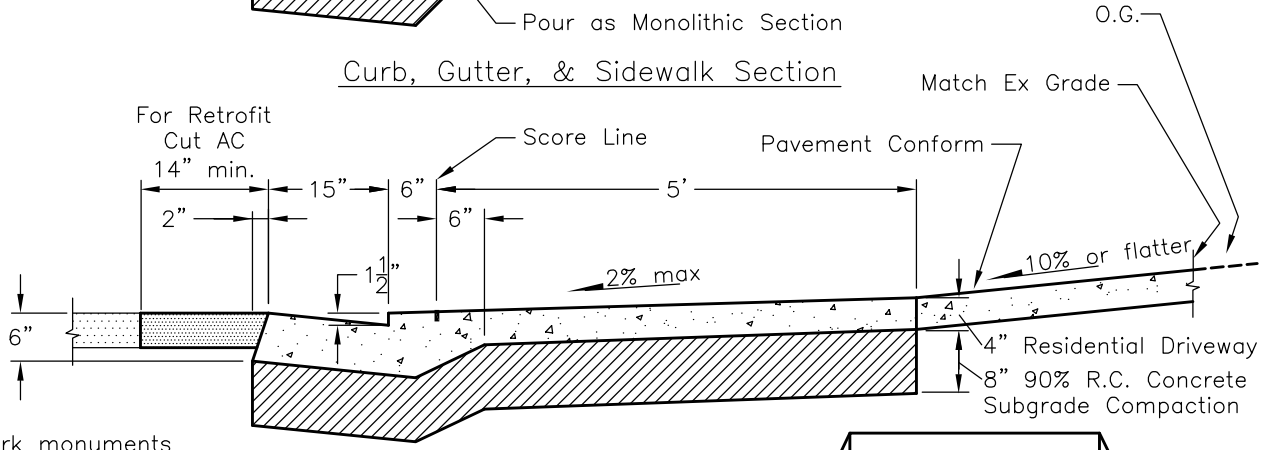

Residential Driveway Section

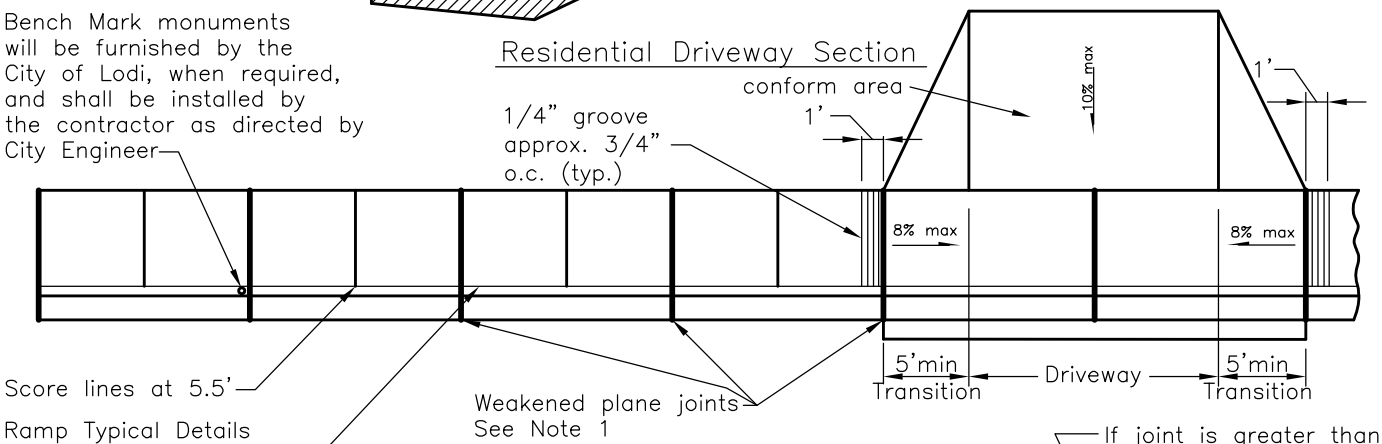

Plan

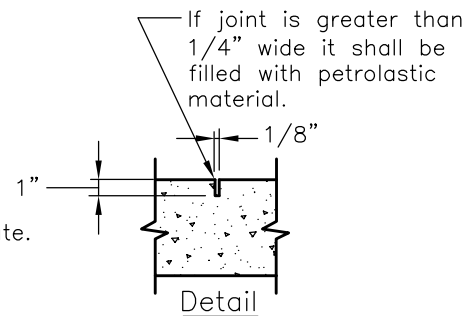

Detail
Weakened Plane Joint

Notes:

1. Construct weakened plane joints at 11' intervals, at ends of driveway transitions, and at center of driveway.
2. Use impervious membrane cure. Broom finish.
3. Class B concrete per Section 90 of Std. Spec., 1 1/2" max. aggregate.
4. Construct expansion joints at 200' max.
5. All exposed edges shall be rounded to 1/2" radius.

Dr. KT	No.	Date	Revision	Appr.
Ch. WS	1	9/07	MINOR REVISIONS	
Date 9/08				

Approved By: F. Wally Sandelin, City Engineer, R.C.E. 39895 — 9/07 Date

STD PLAN 112

CITY OF LODI

PUBLIC WORKS DEPARTMENT

Driveway–Type Curb, Gutter & Sidewalk

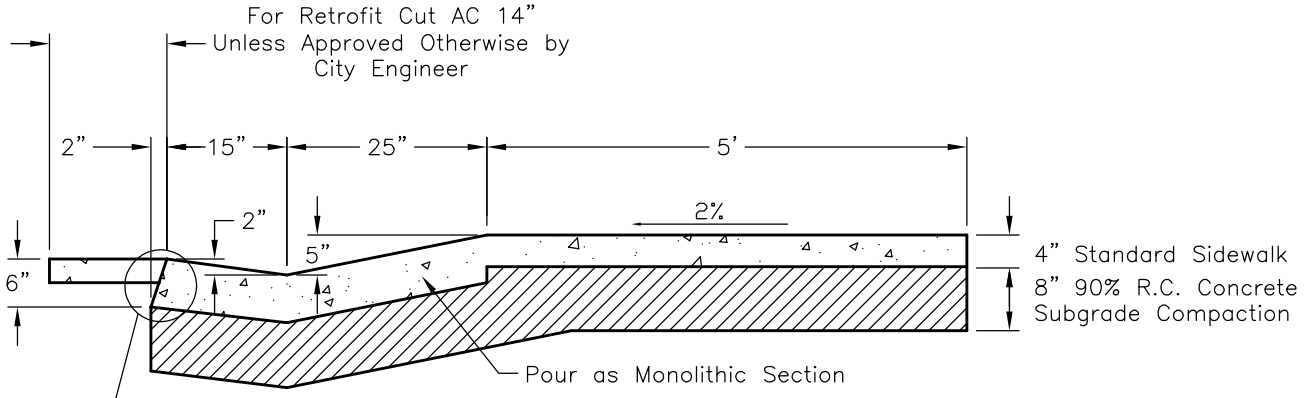

Curb, Gutter, & Sidewalk Section

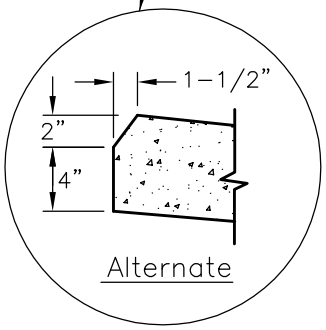

Alternate

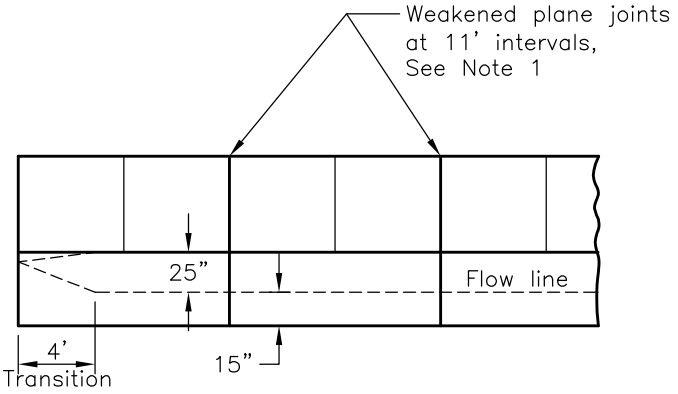

Plan

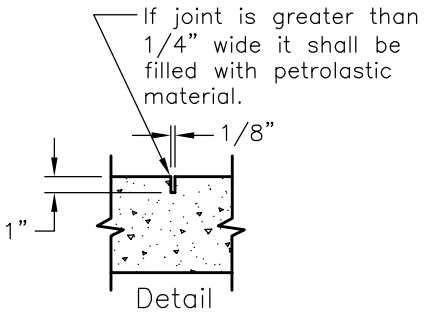

Detail

Weakened Plane Joint

Notes:

1. Construct weakened plane joints at 11' interval to match score lines.
2. Use impervious membrane cure. Broom finish.
3. Class B concrete per Section 90 of Std. Spec., 1–1/2" max. aggregate.
4. Construct expansion joints at 200' max.
5. All exposed edges shall be rounded to 1/2" radius.

Dr. KT	No.	Date	Revision	Appr.	Approved By: F. Wally Sandelin, City Engineer, R.C.E. 39895 — 12/28/00 Date
Ch. WS					STD PLAN
Date 12/00					113A

CITY OF LODI

PUBLIC WORKS DEPARTMENT

Curb Return Transition

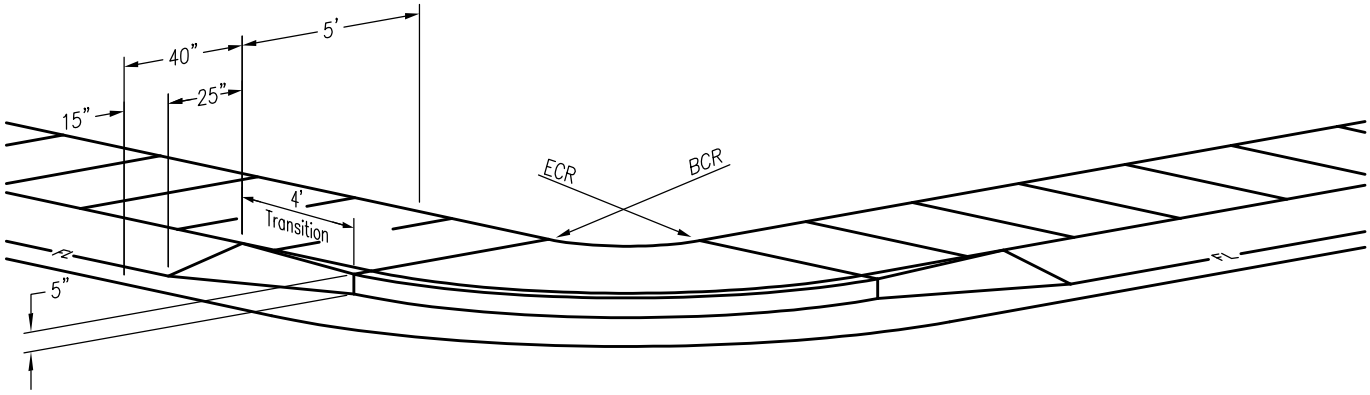

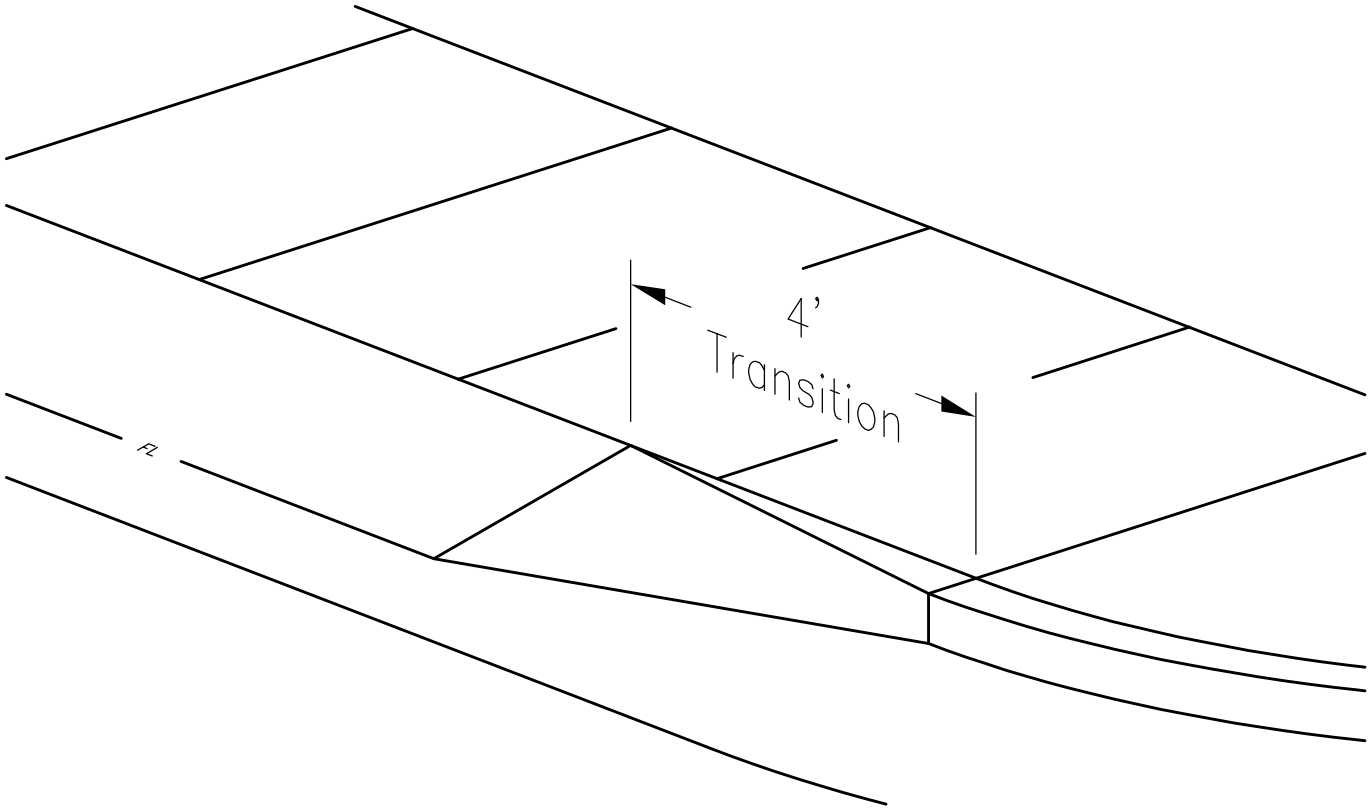

Notes:

1. For Driveway–Type C,G & S
   See Std. Plan 113A.

Dr. KT	No.	Date	Revision	Appr.
Ch. WS				
Date 12/00				

Approved By:

F. Wally Sandelin 12/28/00

F. Wally Sandelin
City Engineer
R.C.E. 39895

Date

STD PLAN

113B

CITY OF LODI

PUBLIC WORKS DEPARTMENT

Commercial–Type Gutter & Driveway

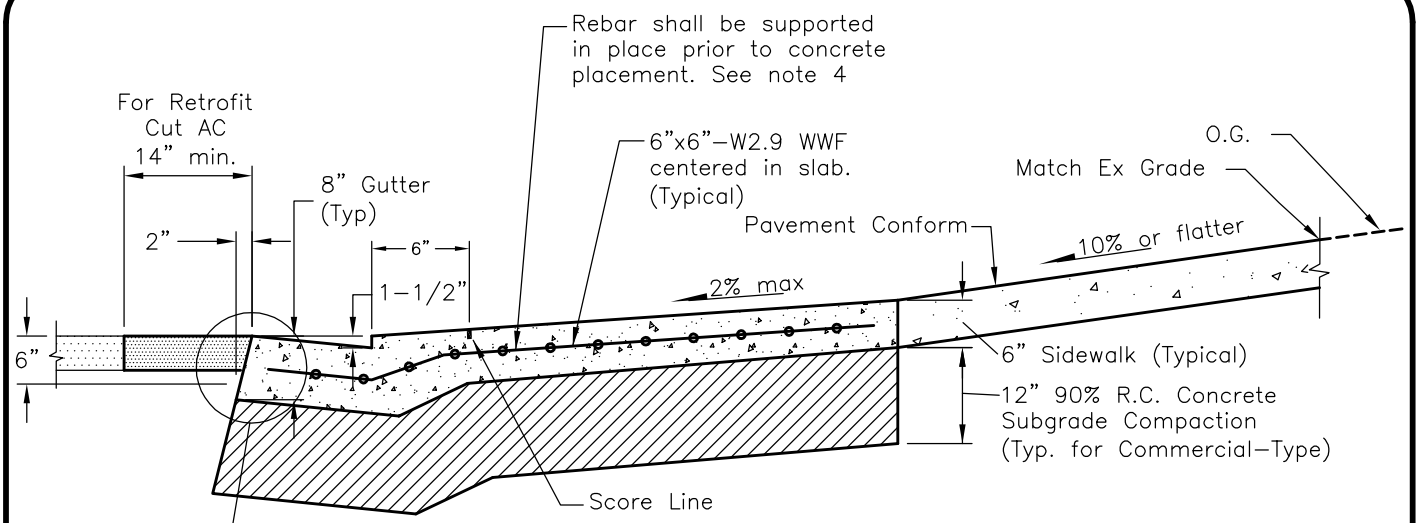

Section

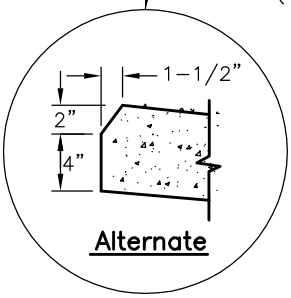

Alternate

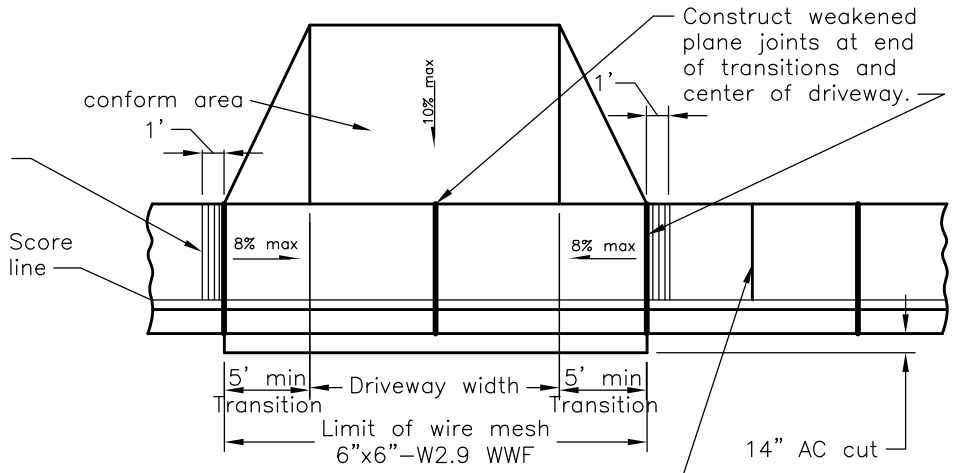

Plan

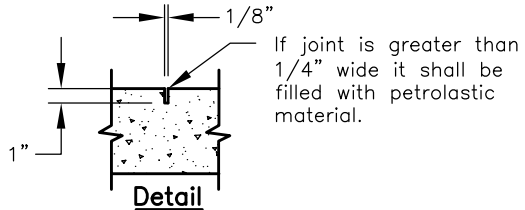

Detail
Weakened Plane Joint

Notes:

1. Use impervious membrane cure. Broom finish.
2. Class B concrete per Section 90 of Std. Spec., 1–1/2" max. aggregate.
3. All exposed edges shall be rounded to 1/2" radius.
4. #4 rebars may be substituted for mesh when approved by the Engineer.

Dr. KT	No.	Date	Revision	Appr.
Ch. WS	1	9/03	ADDED FL HEIGHT DIMENSION	
	2	9/07	MINOR REVISIONS	
Date 12/00				

Approved By: F. Wally Sandelin, City Engineer, R.C.E. 39895 — 9/07 Date

STD PLAN 114

CITY OF LODI

PUBLIC WORKS DEPARTMENT

Concrete Alley Approach

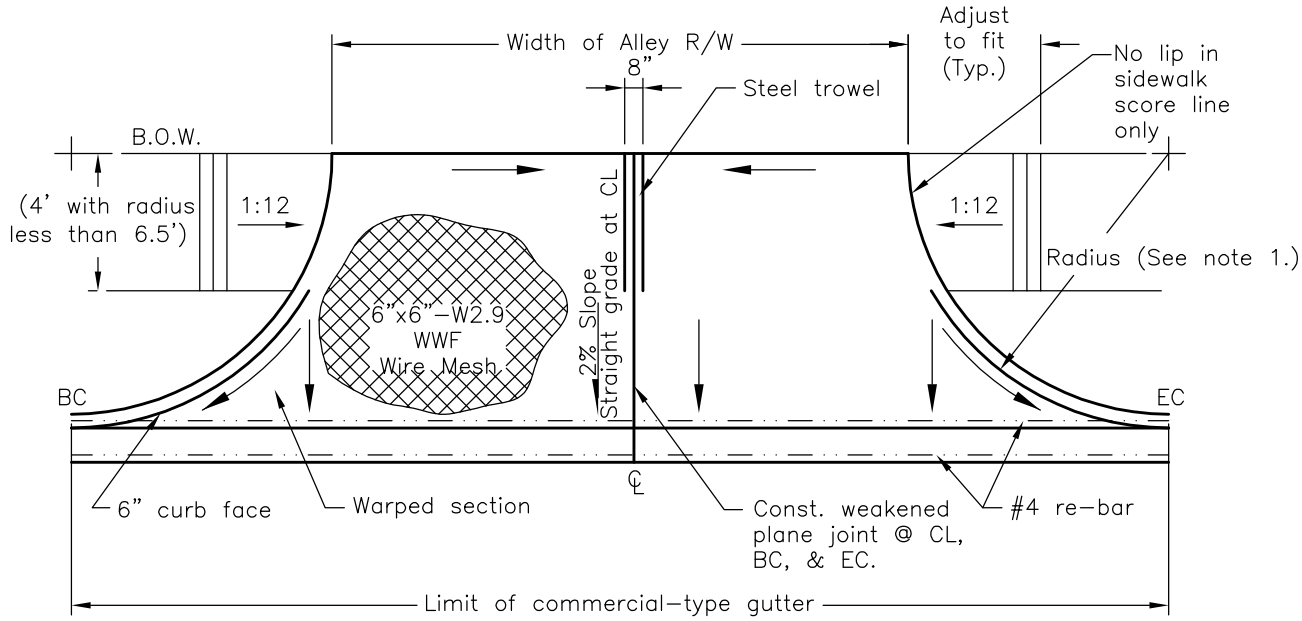

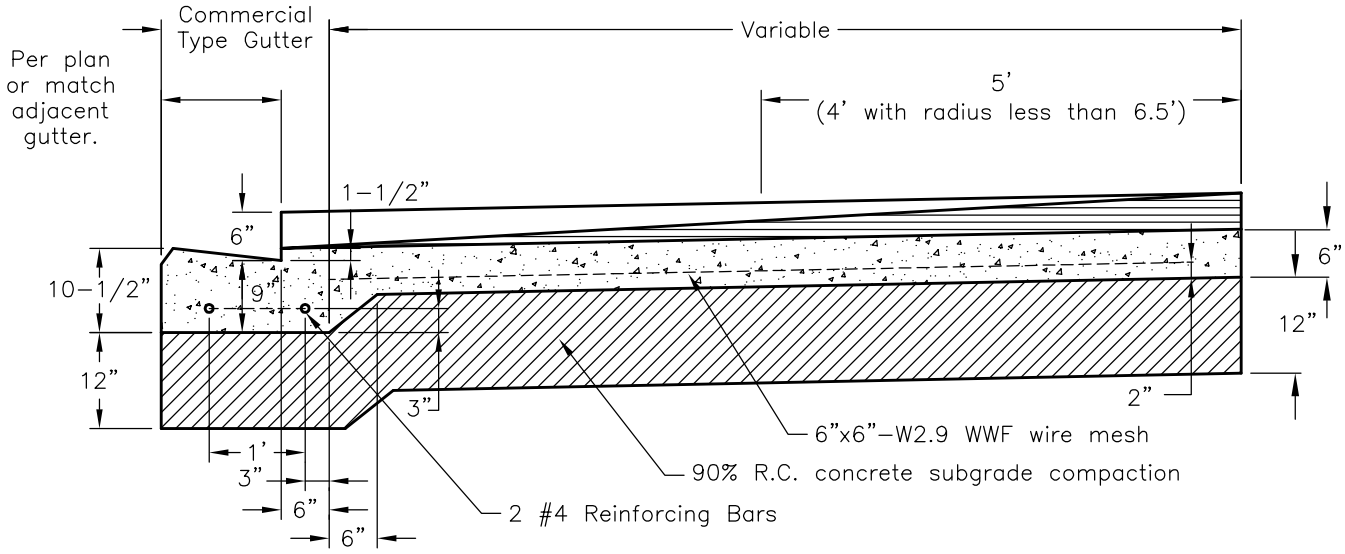

Notes:

1. Radius equals distance from face of curb to back of sidewalk or from face of curb to property line if no sidewalk exists.
2. Use impervious membrane cure. Broom finish.
3. Class B concrete per Section 90 of Std. Spec., 1–1/2" max. aggregate.
4. #4 bars 12" O. C. may be substituted for mesh when approved by the Engineer.

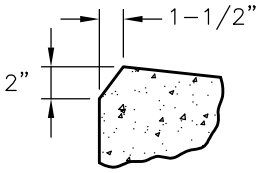

Chamfer Detail

Dr. KT	No.	Date	Revision	Appr.
Ch. WS				
Date 12/00				

Approved By: F. Wally Sandelin 12/28/00

F. Wally Sandelin
City Engineer
R.C.E. 39895

Date

STD PLAN

115

CITY OF LODI

PUBLIC WORKS DEPARTMENT

Sidewalk Repair

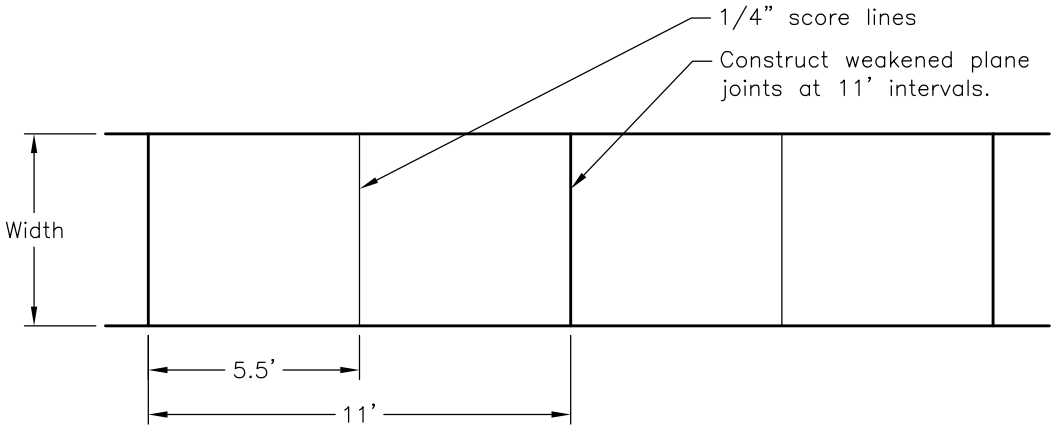

Plan

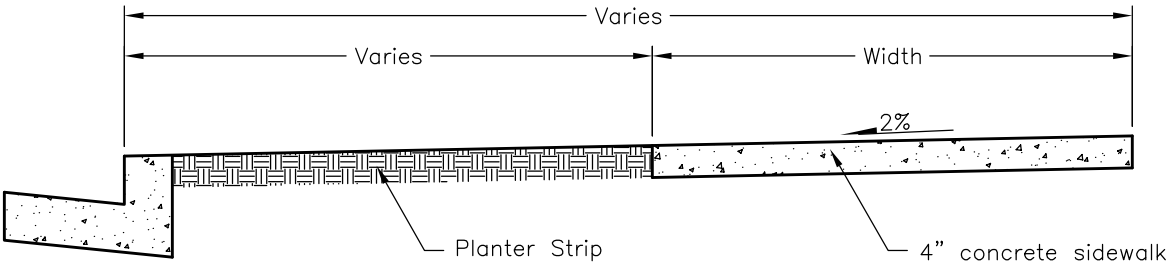

Sidewalk Detail

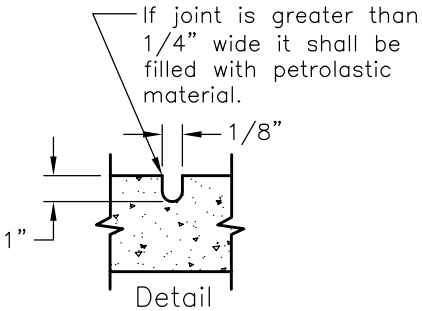

Detail

Weakened Plane Joint

Notes:

1. Match width with adjacent existing sidewalk. For replacement less than 11' match scoring pattern.
2. Concrete shall be 2500 psi @ 28 days. Max. 4" slump. For jobs less than one yard, no static trailer mix, mixer trailer may be used.
3. Construct sidewalk on firm stable subgrade.
4. Light broom finish.
5. Impervious membrane cure.

Dr. KT	No.	Date	Revision	Appr.	Approved By:	STD PLAN
Ch. WS					F. Wally Sandelin 12/28/00	117
Date 12/00					F. Wally Sandelin, City Engineer, R.C.E. 39895 — Date	

CITY OF LODI

PUBLIC WORKS DEPARTMENT

Sign Post Installation

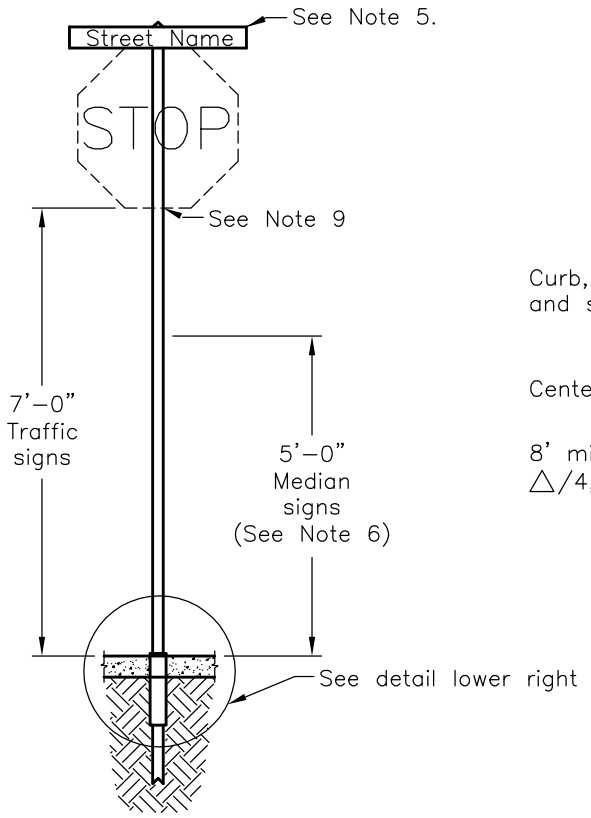

Sign Post

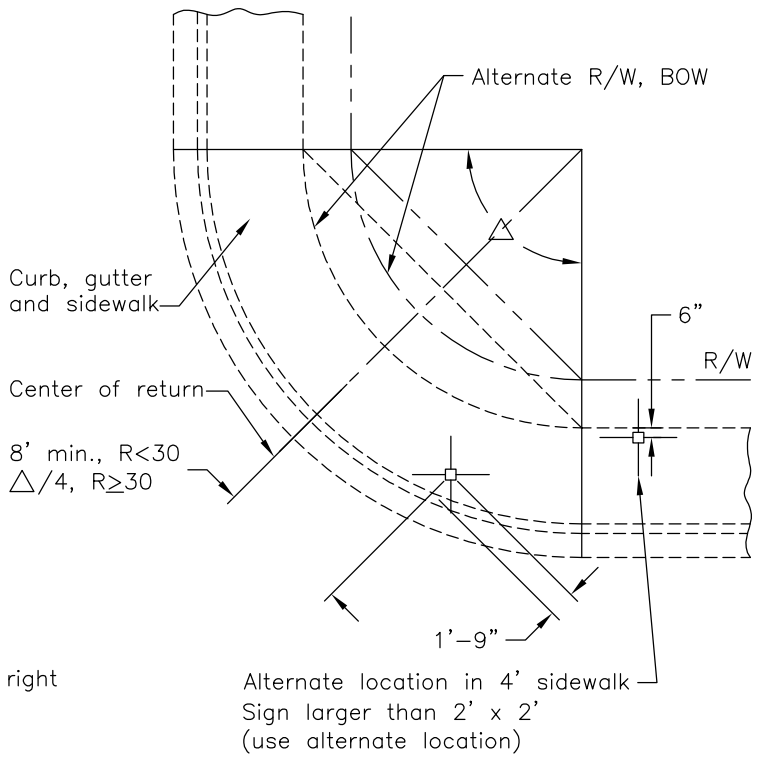

Sign Post Location

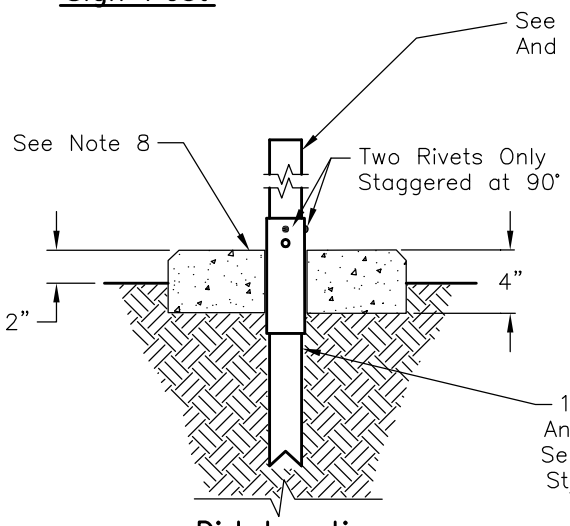

Dirt Location

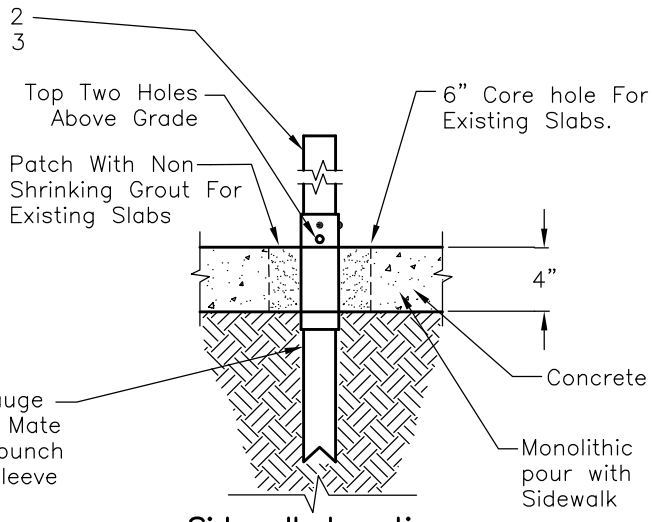

Sidewalk Location

Dr. KT	No.	Date	Revision	Appr.
Ch. WS	1	9/03	CHANGED 2"ø PIPE TO 2" SQ.	
Date 12/00	2	2/04	MOVED NOTES TO SECOND PAGE	

Approved By: F. Wally Sandelin 2/12/04
F. Wally Sandelin
City Engineer
R.C.E. 39895
Date

STD PLAN
119

CITY OF LODI

PUBLIC WORKS DEPARTMENT

Sign Post Installation

Notes:

1. Concrete For Post Installation May Be Class C Concrete.
2. Posts shall be new 2"x 2" 14 gauge galv. tube set plumb.
3. When Sign Square Footage Is 7.5 Square Feet or More Post Shall Be 2" x 2" 12 Gauge galv. Tube.
4. Posts Shall Be Select Punch Both Ends, 12" from bottom end and no greater than sign height at top end, on four Sides.
5. Street Name And Traffic Signs Per Std Plan 142, a min. vertical clearance of 9'–6" at locations with street name signs only.
6. R10's (one way signs) To Be Located 1.5' from bottom of sign When placed in the median.
7. A Powder Coat (Downtown Green) Is Required For Downtown Locations.
8. Form and edge 12" x 12" concrete apron 4" Thick In Dirt Locations, When Required By Engineer.
9. Min. vertical clearance of 6'–6" at locations with multiple signs. (not including street name signs.)

Dr. GWC	No.	Date	Revision	Appr.
Ch. WS	1	2/04	ADDITION OF SECOND PAGE	
Date				

Approved By: F. Wally Sandelin 2/12/04

F. Wally Sandelin
City Engineer
R.C.E. 39895

Date

STD PLAN

119

CITY OF LODI

PUBLIC WORKS DEPARTMENT

Sidewalk and Driveway with Planting Strip

Notes:

1. Alternate "A" shall be used, except where the driveway slope approaches 3 inches per foot. It may then be necessary to use Alternate "B".
2. When Alternate "B" is used sidewalk shall be removed to nearest score-mark by sawing. When the sidewalk is replaced the existing scoring pattern shall be maintained.
3. Additional compaction is not required where existing curb and gutter, sidewalk, and/or driveway are being removed and replaced.
4. Class B concrete per Section 90 of Std. Specs, 1-1/2" max. aggregate with impervious membrane cure and light broom finish.

Dr. K	No.	Date	Revision	Appr.
Ch. WS	1	9/03	ADDED SCORE LINES	
	2	2/04	ADDED FILL AREA IN PARKWAY	
Date 12/00	3	2/05	REVISED PAGE 1	

Approved By: F. Wally Sandelin, City Engineer, R.C.E. 39895 — 2/2/05 Date

STD PLAN 121

CITY OF LODI

PUBLIC WORKS DEPARTMENT

Sidewalk and Driveway with Planting Strip

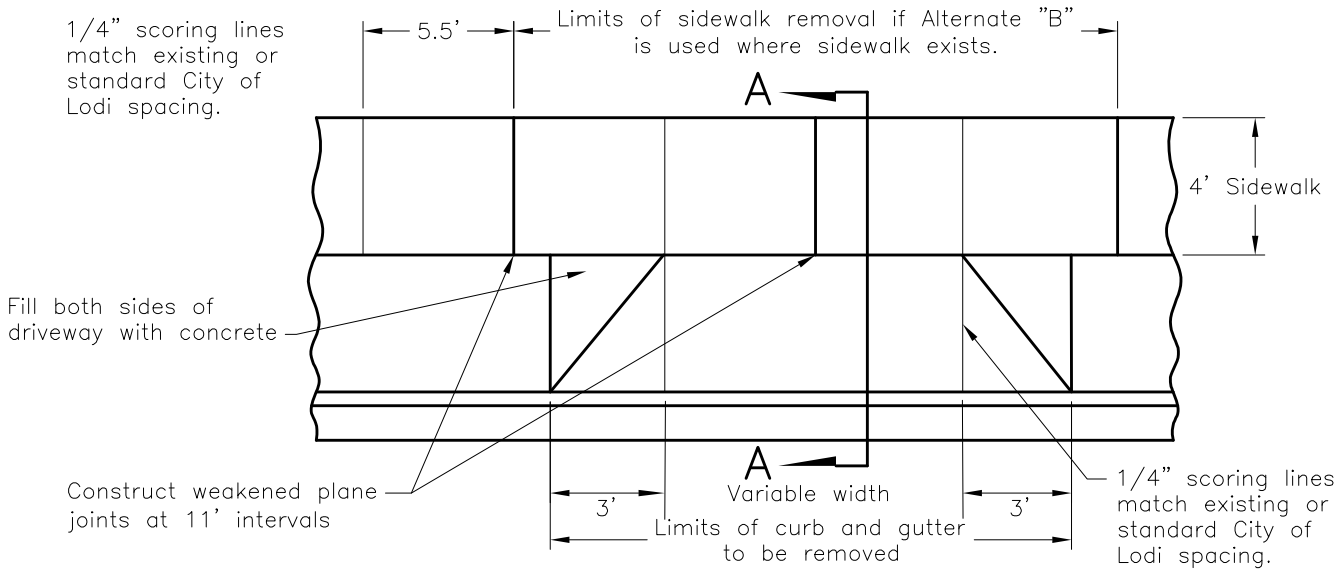

Driveway

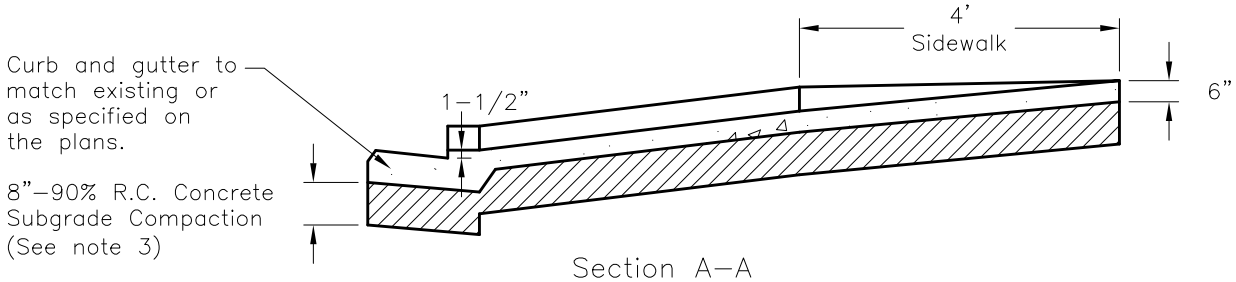

Section A–A
Alternate A

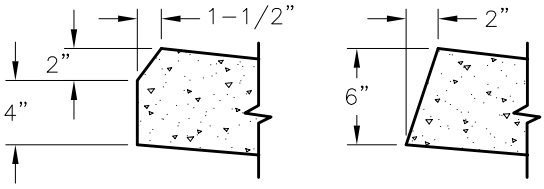

Detail
Alternate Toe Configurations

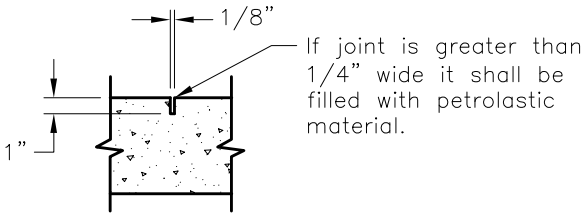

Detail
Weakened Plane Joint

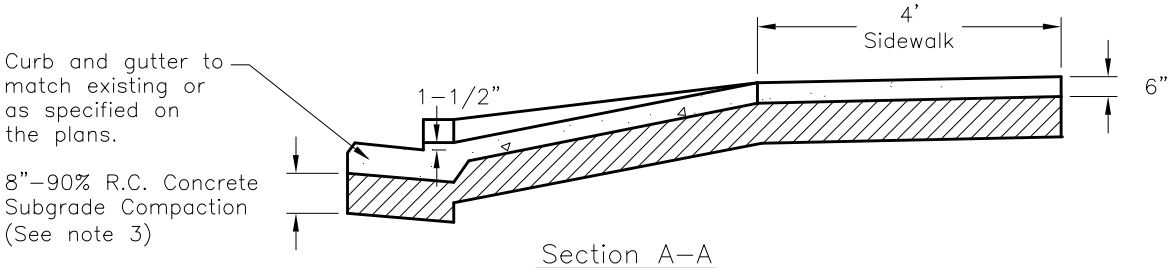

Section A–A
Alternate B

Dr. K	No.	Date	Revision	Appr.
Ch. WS	1	9/03	ADDED SCORE LINES	
	2	2/04	ADDED FILL AREA IN PARKWAY	
Date 12/00	3	2/05	ADDED ALT. B SECTION	

Approved By: F. Wally Sandelin, City Engineer, R.C.E. 39895 — Date 2/2/05

STD PLAN 121

CITY OF LODI

PUBLIC WORKS DEPARTMENT

FRAME AND COVER ADJUSTMENT

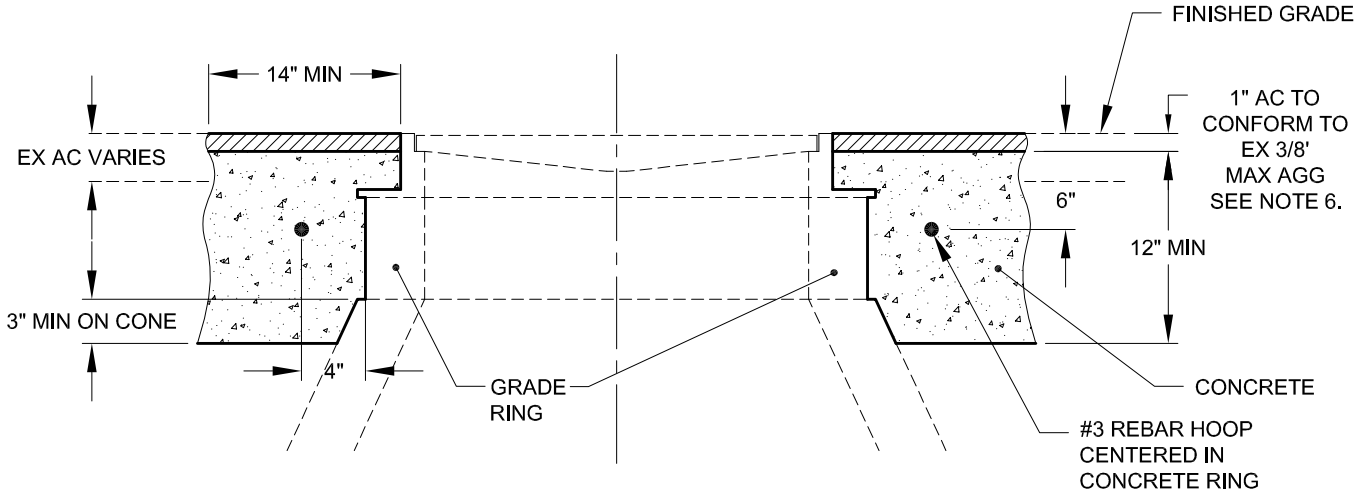

MANHOLE & RISER

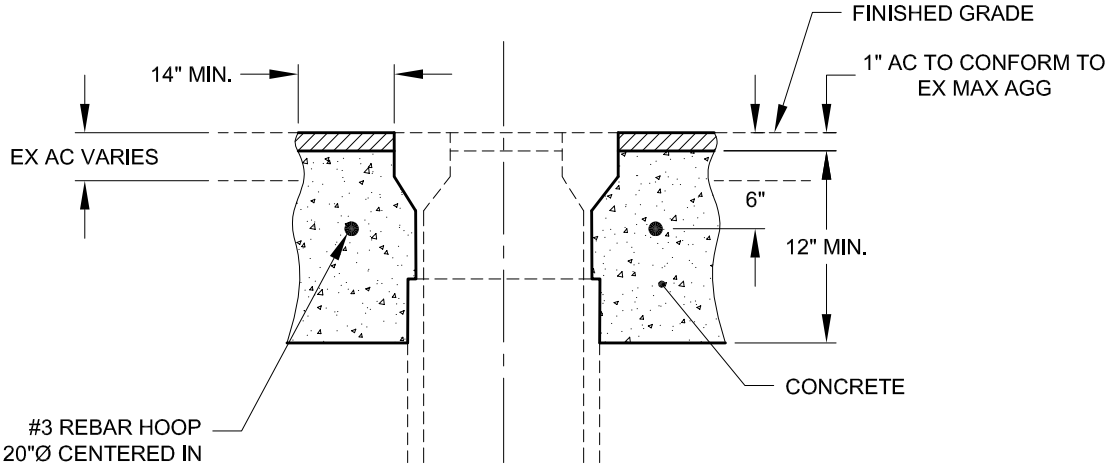

WATER VALVE
(MONUMENT BOX SIMILAR)

NOTES:

1. THIS DETAIL SHALL BE USED WHERE FRAME AND COVERS ARE BEING ADJUSTED TO GRADE.
2. CLASS B CONCRETE SHALL BE USED. FINISH SHALL BE ROUGH.
3. CONCRETE SHALL BE PLACED AGAINST NEATLY EDGED EXCAVATION.
4. FRAMES SHALL MATCH EX FINISHED GRADE WITHIN 1/8".
5. TACK THE AREA TO BE PAVED, PRIOR TO PLACEMENT OF AC.
6. A.C. MAY BE 1/2' MAX. AGG. ONLY WITH PRIOR APPROVAL OF CITY ENGINEER.

Dr. KT	No.	Date	Revision	Appr.	Approved By:
Ch. WS					Charlie Swimley — Date City Engineer / Deputy Public Works Director RCE No. 52842
Date 12/00					

STD PLAN

123

CITY OF LODI

PUBLIC WORKS DEPARTMENT

Dead–End Barricade

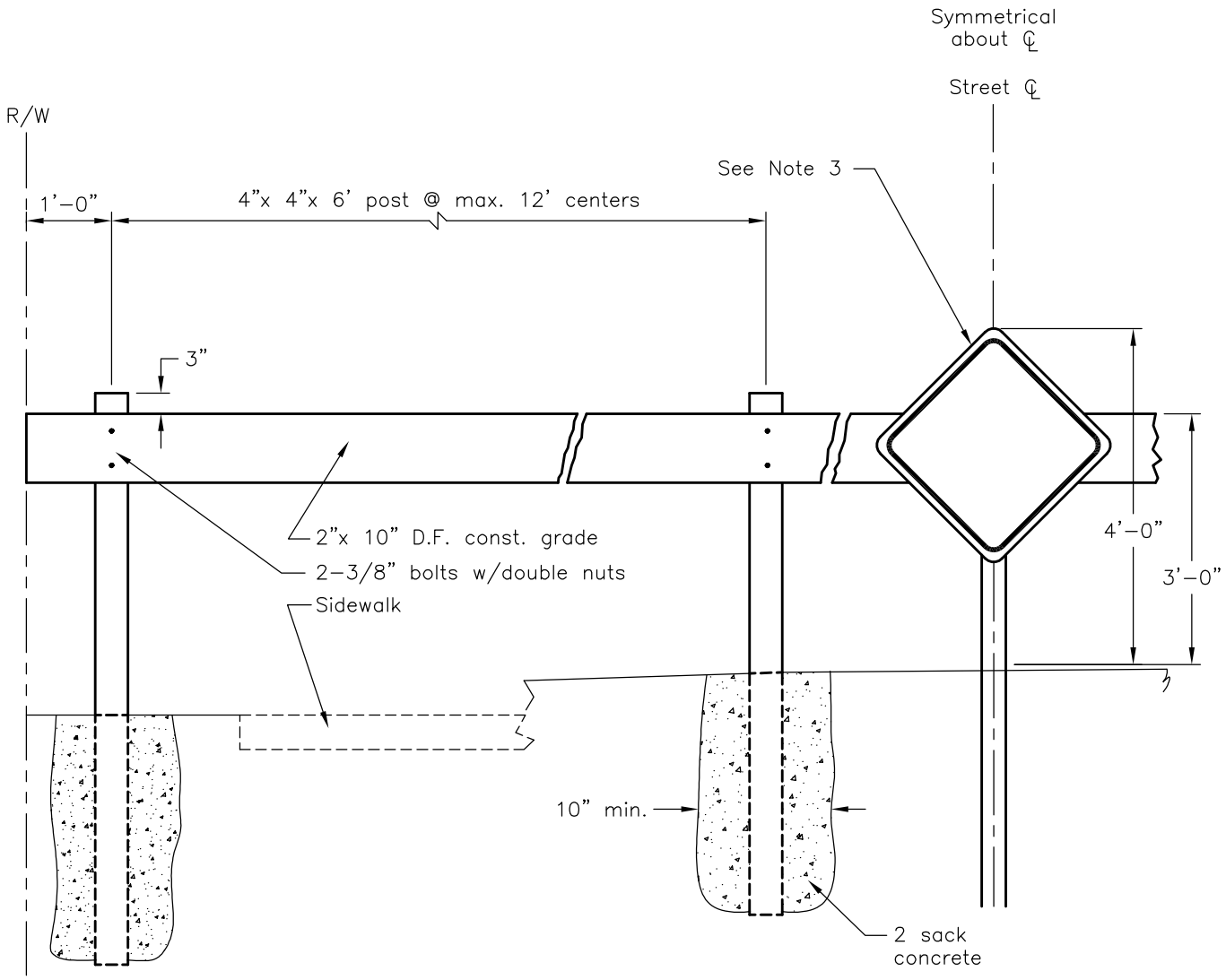

Notes:

1. All posts shall be redwood or plastic.
2. Entire barrier shall be painted white–3 coats.
3. Install one fully reflective red Type N Marker 18"x 18" at centerline. (& 12' right of ℄ when c–c width is over 60'.) Backing: 0.080 in aluminum 606IT6 alloy. Reflectorization: Wide angle flat top Scotchlite high intensity reflective sheeting. Mount with 5/16 ø bolts w/double nuts.
4. Servicable portions of barricades being removed may be reused at new locations as approved by the Engineer.

Dr. KT	No.	Date	Revision	Appr.	Approved By:	STD PLAN
Ch. WS					F. Wally Sandelin 12/28/00	128
Date 12/00					F. Wally Sandelin, City Engineer, R.C.E. 39895 — Date	

CITY OF LODI
PUBLIC WORKS DEPARTMENT

Through–the–Curb Drain

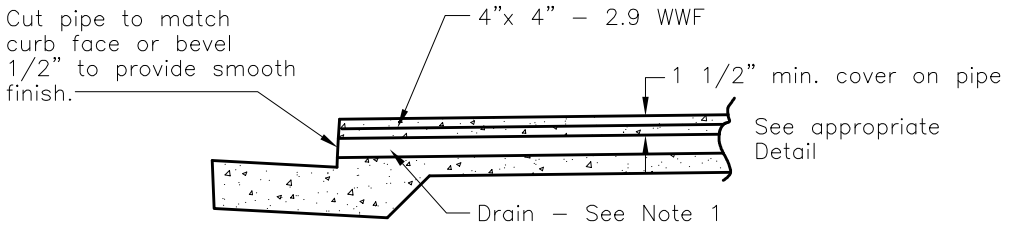

Section

See Note 3

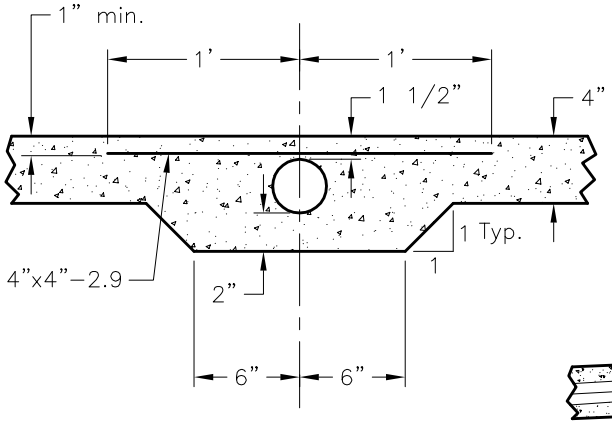

Drain Section

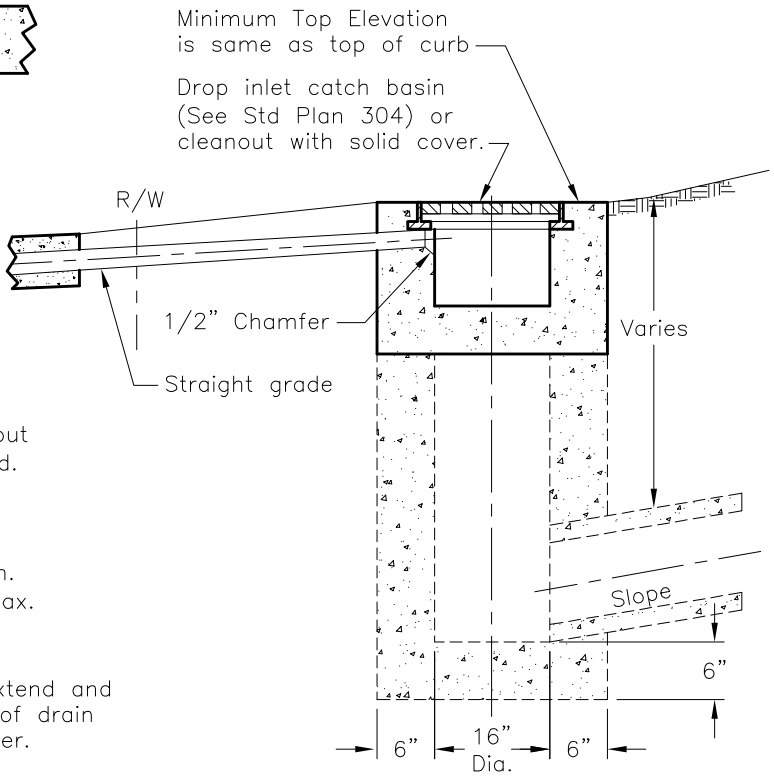

Yard Drain Detail

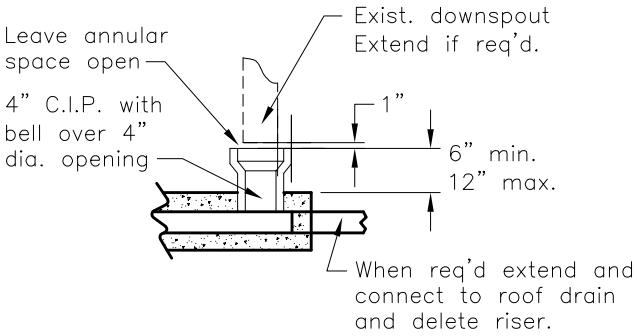

Roof Drain Detail

Notes:

1. Pipe alternates: 3" x 4"–26 Ga. Galv. downspout pipe
   3" x 4" round pipe–Sch 40 PVC, CIP or steel
2. Curb, gutter & sidewalk dimensions to match adjacent construction.
3. For installations in existing sidewalk, saw cut and remove 20" min width of sidewalk and curb. Gutter may be left in place.

Dr. KT	No.	Date	Revision	Appr.	Approved By:	STD PLAN
Ch. WS					F. Wally Sandelin 12/28/00	129
Date 12/00					F. Wally Sandelin, City Engineer, R.C.E. 39895 — Date	

CITY OF LODI

PUBLIC WORKS DEPARTMENT

Survey Monument Assembly (6")

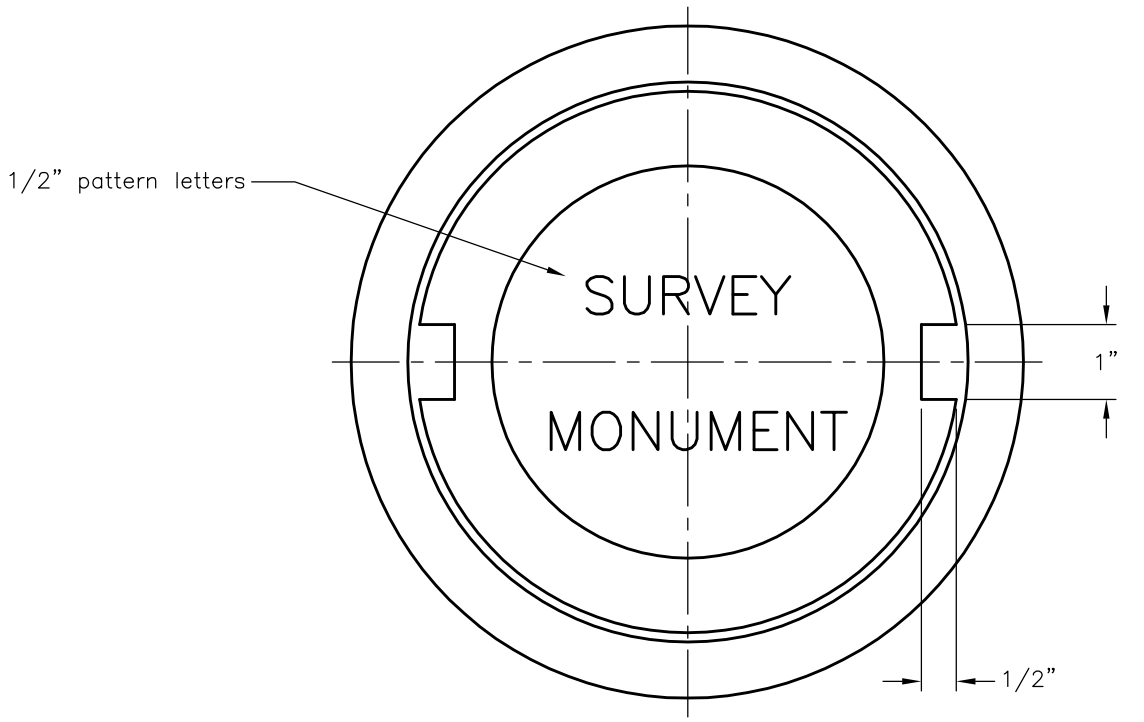

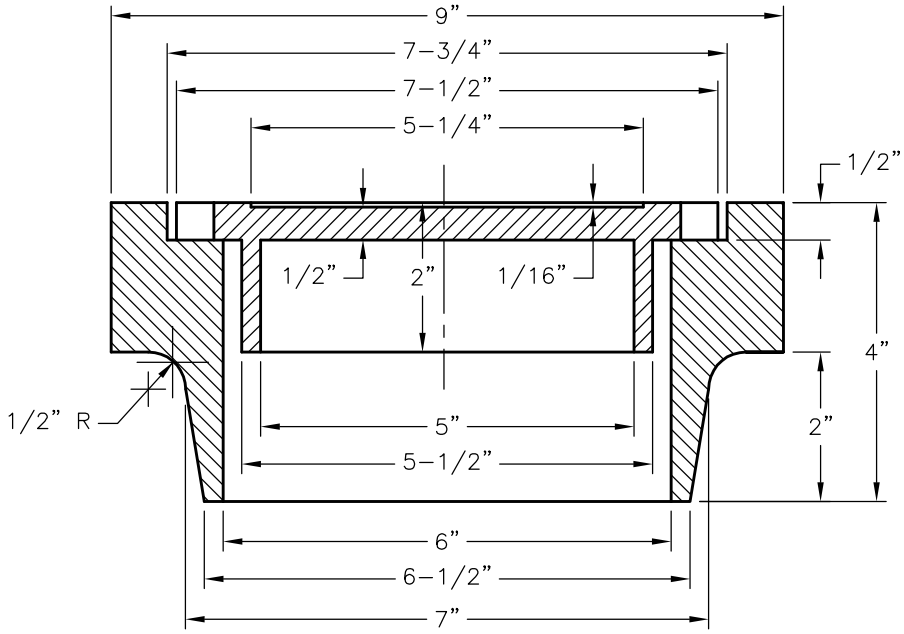

Notes:

1. Frame – Approx. wt. 22 lbs.
2. Cover – Approx. wt. 7 lbs.
3. Material – Cast Iron

Dr. KT	No.	Date	Revision	Appr.
	1	2/04	REVISED FRAME DIMENSION	
Ch. WS				
Date 12/00				

Approved By: F. Wally Sandelin, City Engineer, R.C.E. 39895 — 2/12/04 Date

STD PLAN 130

CITY OF LODI

PUBLIC WORKS DEPARTMENT

Street Light Foundation for Future Installation

Bond all conduit and anchor bolts with no. 6 cu.

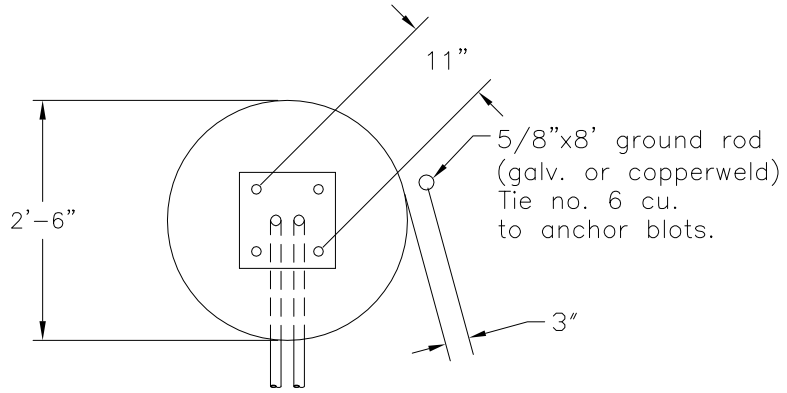

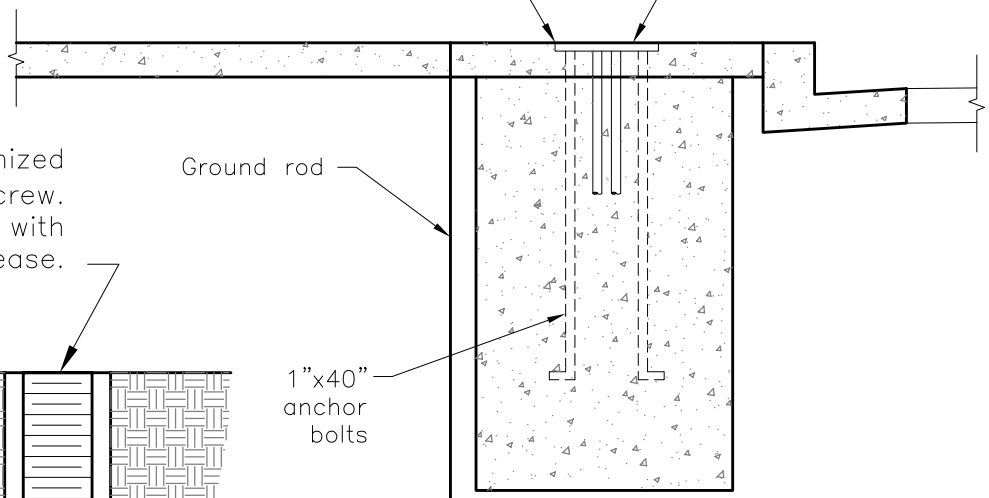

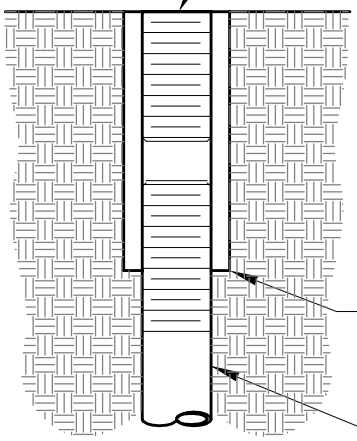

Dr. KT	No.	Date	Revision	Appr.	Approved By:	STD PLAN
Ch. WS					F. Wally Sandelin, City Engineer, R.C.E. 39895 — 9/25/02 Date	131
Date 12/00						

CITY OF LODI

PUBLIC WORKS DEPARTMENT

TYPE 1 HANDICAP RAMPS

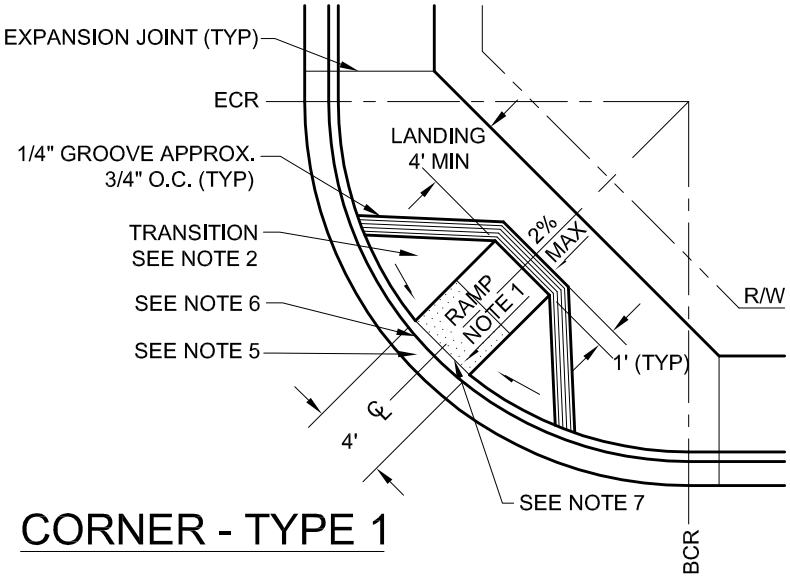

CORNER - TYPE 1

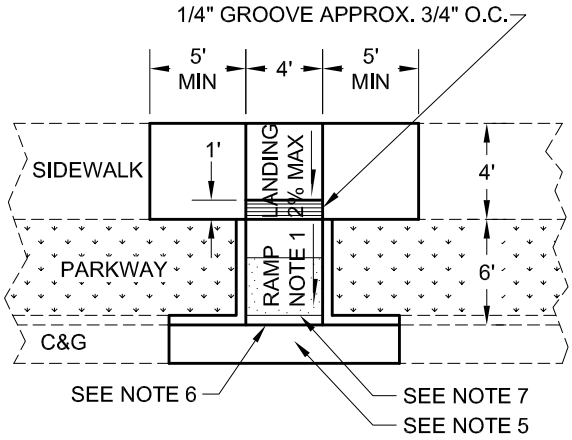

MIDBLOCK - TYPE 1

NOTES:

1. RAMP SLOPE 1:12 MAXIMUM.
2. TRANSITION SLOPE 1:10 MAXIMUM.
3. SEE STD. PLAN 611& 612 FOR CORNER LAYOUT DIMENSIONS. CURB RETURN RADIUS PER PLANS. CENTER RAMP ON MIDPOINT OF CURB RETURN.
4. THE CONCRETE FINISH OF THE RAMP SHALL HAVE A TRANSVERSE BROOMED SURFACE TEXTURE ROUGHER THAN THE SURROUNDING SIDEWALK.
5. THE GUTTER PAN ACROSS THE ROUTE OF TRAVEL, FROM THE RAMP TO THE STREET, SHALL HAVE A MAXIMUM SLOPE OF 5%.
6. ALL HANDICAP RAMPS SHALL HAVE NO LIP AND 1/4" DEEP SCORE LINE ACROSS THE RAMP AT GUTTER FLOWLINE.
7. DETECTABLE WARNING SURFACE TO BE INSTALLED 6" TO 8" FROM GUTTER FLOW LINE AND EXTEND 36 INCHES MINIMUM IN THE DIRECTION OF TRAVEL AND THE FULL WIDTH OF THE CURB RAMP.
8. REFER TO CALTRANS STANDARD PLAN A88A FOR RAISED TRUNCATED DOME DETAILS.

Dr. LP	No.	Date	Revision	Appr.	Approved By:	STD PLAN
Ch. WS					F. Wally Sandelin 3/15/05 F. Wally Sandelin, City Engineer, R.C.E. 39895 — Date	132A
Date 3/10/05						

CITY OF LODI

PUBLIC WORKS DEPARTMENT

TYPE 2 HANDICAP RAMPS

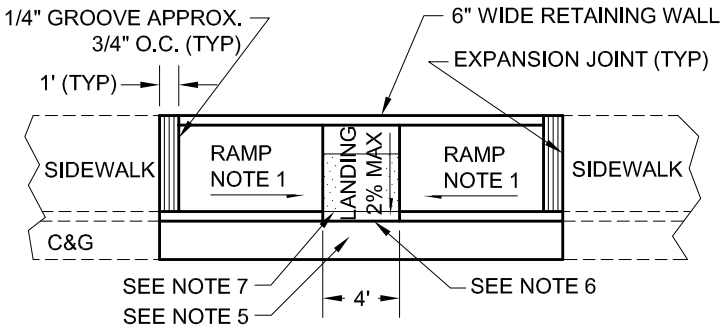

MIDBLOCK - TYPE 2

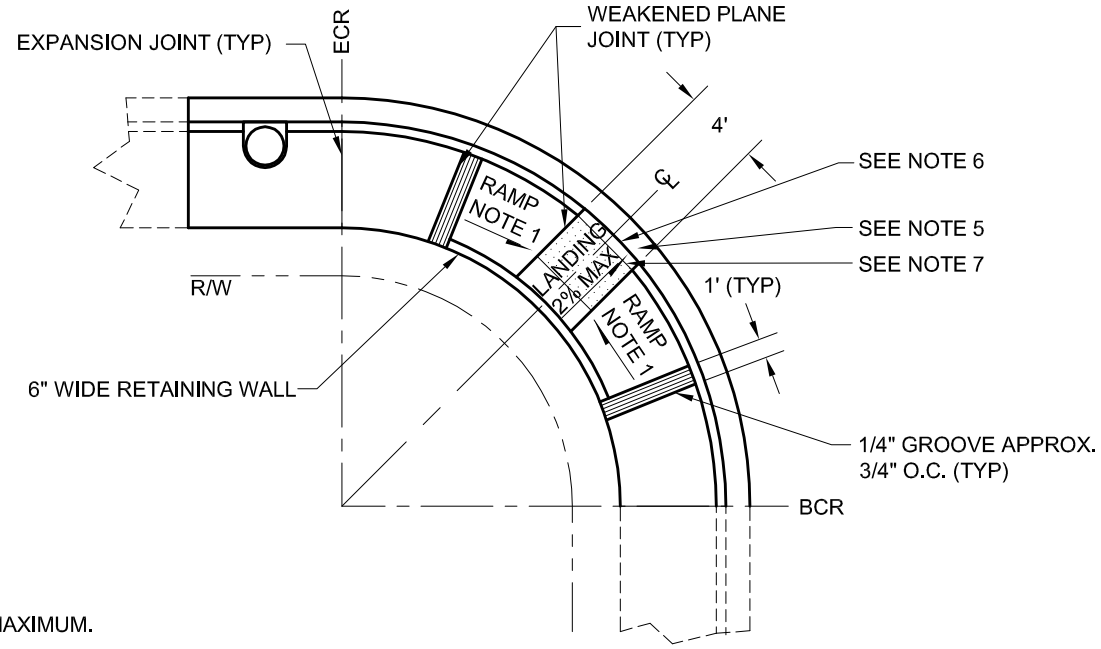

CORNER - TYPE 2

NOTES:

1. RAMP SLOPE 1:12 MAXIMUM.
2. TRANSITION SLOPE 1:10 MAXIMUM.
3. CENTER RAMP ON MIDPOINT OF CURB RETURN.
4. THE CONCRETE FINISH OF THE RAMP SHALL HAVE A TRANSVERSE BROOMED SURFACE TEXTURE ROUGHER THAN THE SURROUNDING SIDEWALK.
5. THE GUTTER PAN ACROSS THE ROUTE OF TRAVEL, FROM THE RAMP TO THE STREET, SHALL HAVE A MAXIMUM SLOPE OF 5%.
6. ALL HANDICAP RAMPS SHALL HAVE NO LIP AND 1/4" DEEP SCORE LINE ACROSS THE RAMP AT GUTTER FLOWLINE.
7. DETECTABLE WARNING SURFACE TO BE INSTALLED 6" TO 8" FROM GUTTER FLOWLINE AND EXTEND 36 INCHES MINIMUM IN THE DIRECTION OF TRAVEL AND THE FULL WIDTH OF THE LANDING.
8. REFER TO CALTRANS STANDARD PLAN A88A FOR RAISED TRUNCATED DOME DETAILS.

Dr. LP	No.	Date	Revision	Appr.	Approved By:	STD PLAN
Ch. WS					F. Wally Sandelin 3/15/05 F. Wally Sandelin, City Engineer, R.C.E. 39895 — Date	132B
Date 3/10/05						

CITY OF LODI

PUBLIC WORKS DEPARTMENT

TYPE 3 HANDICAP RAMP

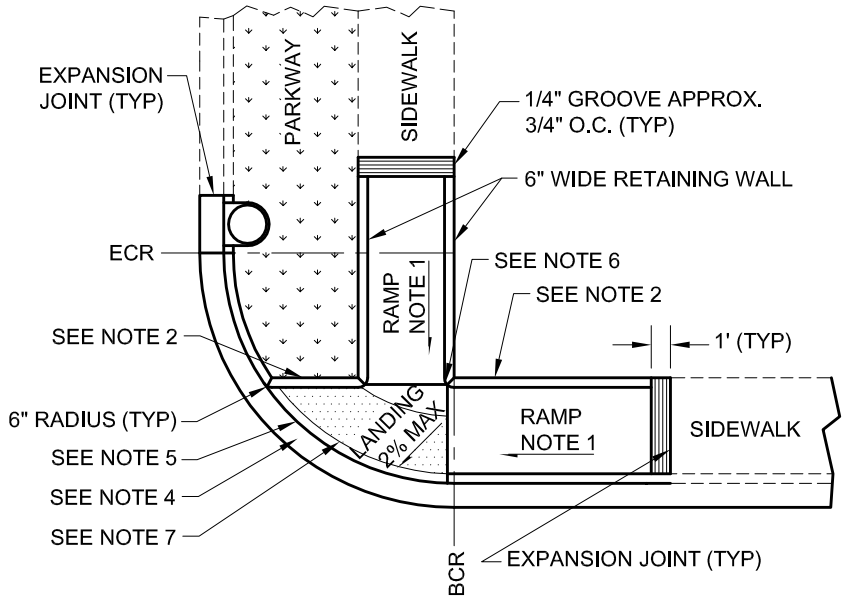

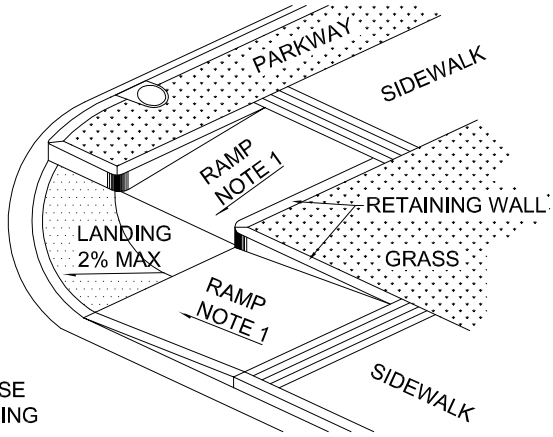

NOTES:

1. RAMP SLOPE 1:12 MAXIMUM.
2. BACK OF CURB SHALL BE IN LINE WITH BACK OF WALK.
3. THE CONCRETE FINISH OF THE RAMP SHALL HAVE A TRANSVERSE BROOMED SURFACE TEXTURE ROUGHER THAN THE SURROUNDING SIDEWALK.
4. THE GUTTER PAN ACROSS THE ROUTE OF TRAVEL, FROM THE RAMP TO THE STREET, SHALL HAVE A MAXIMUM SLOPE OF 5%.
5. ALL HANDICAP RAMPS SHALL HAVE NO LIP AND 1/4" DEEP SCORE LINE ACROSS THE RAMP AT GUTTER FLOWLINE.
6. RETAINING WALL AT BACK OF RAMP SHALL BE CONSTRUCTED WITH A 6" RADIUS AT THE CORNER AND MAINTAIN EXISTING BACK OF WALK ELEVATIONS.
7. DETECTABLE WARNING SURFACE TO BE INSTALLED 6" TO 8" FROM GUTTER FLOWLINE AND EXTEND 36 INCHES MINIMUM IN THE DIRECTION OF TRAVEL AND FULL WIDTH OF LANDING.
8. REFER TO CALTRANS STANDARD PLAN A88A FOR RAISED TRUNCATED DOME DETAILS.

Dr. LP	No.	Date	Revision	Appr.	Approved By:	STD PLAN
Ch. WS					F. Wally Sandelin 3/15/05 F. Wally Sandelin, City Engineer, R.C.E. 39895 — Date	132C
Date 3/10/05						

CITY OF LODI

PUBLIC WORKS DEPARTMENT

TYPE 4 HANDICAP RAMP

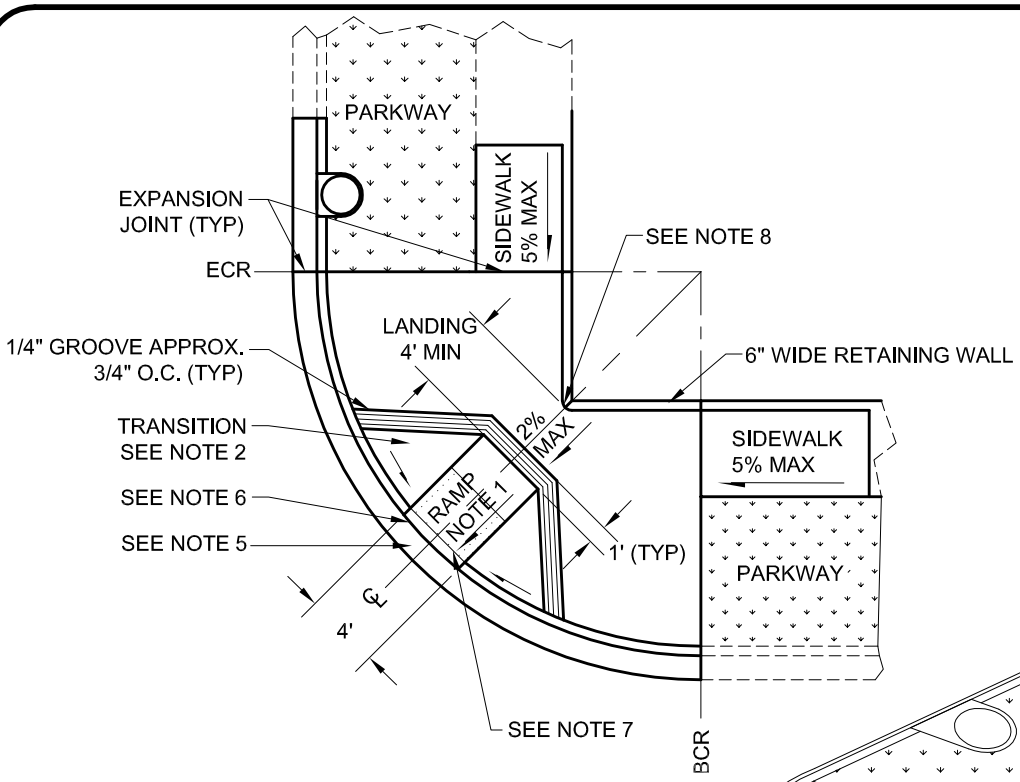

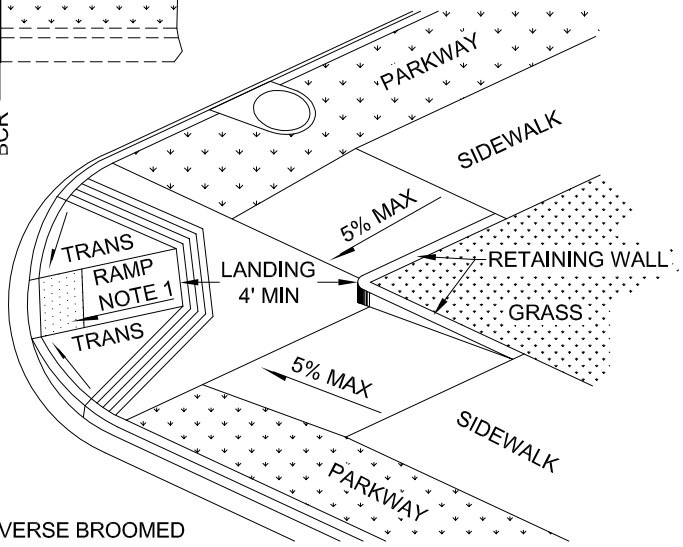

NOTES:

1. RAMP SLOPE FROM 1:12 MAXIMUM TO 1:15 MINIMUM.
2. TRANSITION SLOPE 1:10 MAXIMUM.
3. CENTER RAMP ON MIDPOINT OF CURB RETURN.
4. THE CONCRETE FINISH OF THE RAMP SHALL HAVE A TRANSVERSE BROOMED SURFACE TEXTURE ROUGHER THAN THE SURROUNDING SIDEWALK.
5. THE GUTTER PAN ACROSS THE ROUTE OF TRAVEL, FROM THE RAMP TO THE STREET, SHALL HAVE A MAXIMUM SLOPE OF 5%.
6. ALL HANDICAP RAMPS SHALL HAVE NO LIP AND 1/4" DEEP SCORE LINE ACROSS THE RAMP AT GUTTER FLOWLINE.
7. DETECTABLE WARNING SURFACE TO BE INSTALLED 6" TO 8" FROM GUTTER FLOWLINE AND EXTEND 36 INCHES MINIMUM IN THE DIRECTION OF TRAVEL AND THE FULL WIDTH OF THE CURB RAMP.
8. RETAINING WALL AT BACK OF RAMP SHALL BE CONSTRUCTED WITH A 6" RADIUS AT THE CORNER AND MAINTAIN EXISTING BACK OF WALK ELEVATIONS.
9. REFER TO CALTRANS STANDARD PLAN A88A FOR RAISED TRUNCATED DOME DETAILS.

Dr. LP	No.	Date	Revision	Appr.	Approved By:	STD PLAN
Ch. WS					F. Wally Sandelin 3/15/05	132D
Date 3/10/05					F. Wally Sandelin, City Engineer, R.C.E. 39895 — Date	

CITY OF LODI

PUBLIC WORKS DEPARTMENT

TYPE 5 HANDICAP RAMP

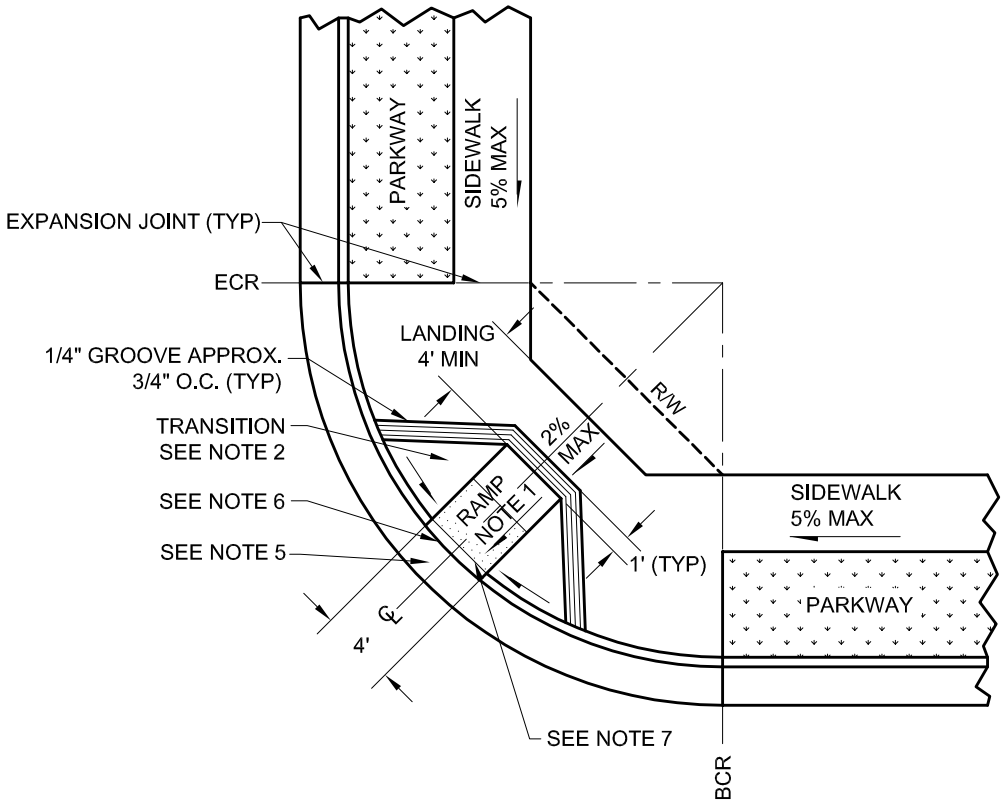

NOTES:

1. RAMP SLOPE 1:12 MAXIMUM.
2. TRANSITION SLOPE 1:10 MAXIMUM.
3. CENTER RAMP ON MIDPOINT OF CURB RETURN.
4. THE CONCRETE FINISH OF THE RAMP SHALL HAVE A TRANSVERSE BROOMED SURFACE TEXTURE ROUGHER THAN THE SURROUNDING SIDEWALK.
5. THE GUTTER PAN ACROSS THE ROUTE OF TRAVEL, FROM THE RAMP TO THE STREET, SHALL HAVE A MAXIMUM SLOPE OF 5%.
6. ALL HANDICAP RAMPS SHALL HAVE NO LIP AND 1/4" DEEP SCORE LINE ACROSS THE RAMP AT GUTTER FLOWLINE.
7. DETECTABLE WARNING SURFACE TO BE INSTALLED 6" TO 8" FROM GUTTER FLOWLINE AND EXTEND 36 INCHES MINIMUM IN THE DIRECTION OF TRAVEL AND THE FULL WIDTH OF THE CURB RAMP.
8. REFER TO CALTRANS STANDARD PLAN A88A FOR RAISED TRUNCATED DOME DETAILS.

Dr. LP	No.	Date	Revision	Appr.	Approved By:	STD PLAN
Ch. WS					F. Wally Sandelin City Engineer R.C.E. 39895 — 3/15/05 Date	132E
Date 3/10/05						

CITY OF LODI

PUBLIC WORKS DEPARTMENT

Residential Street Knuckle

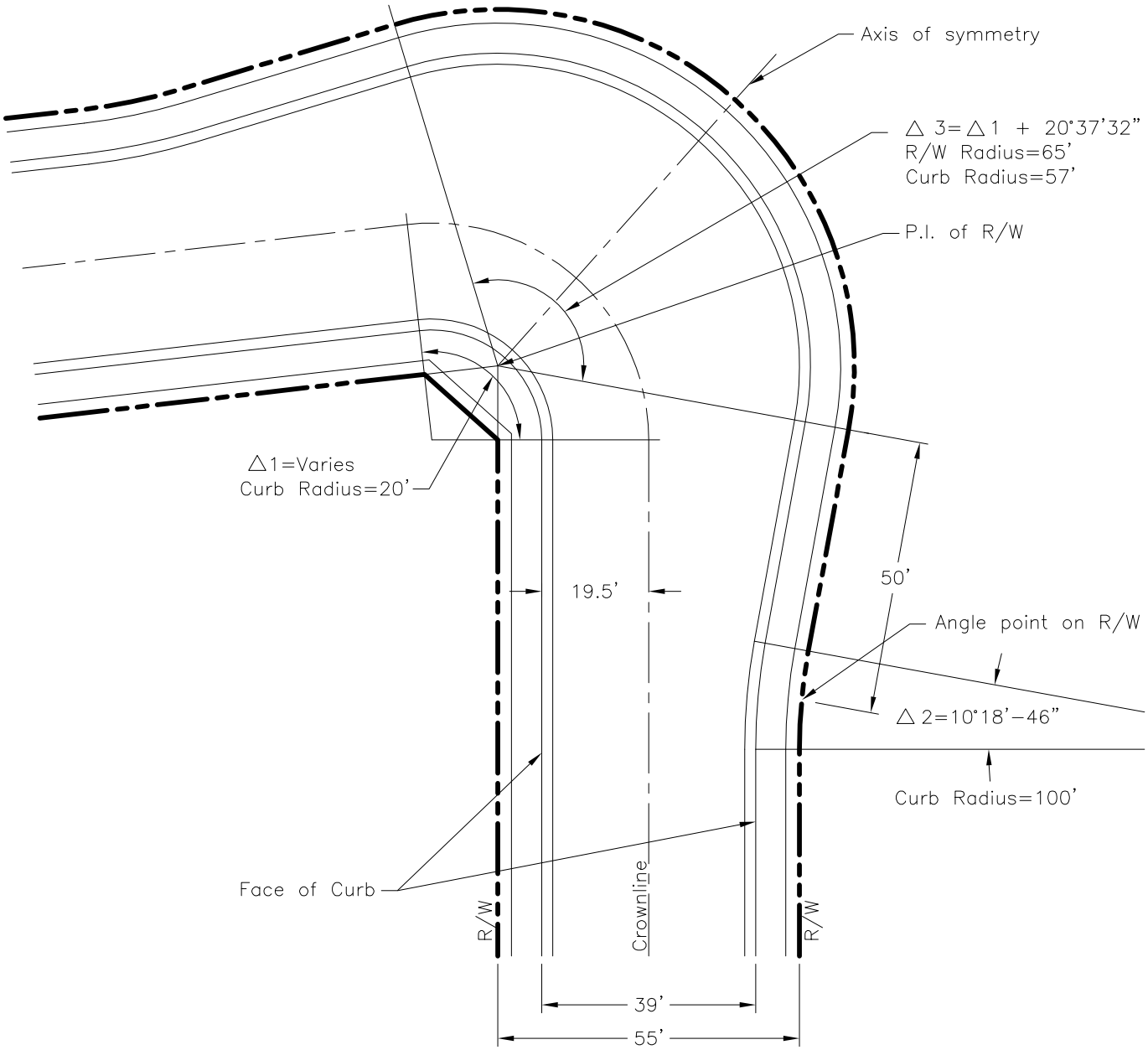

Dr. KT	No.	Date	Revision	Appr.	Approved By: F. Wally Sandelin, City Engineer, R.C.E. 39895 — 12/28/00 Date
Ch. WS					STD PLAN
Date 12\00					133

CITY OF LODI

PUBLIC WORKS DEPARTMENT

Parking Standards

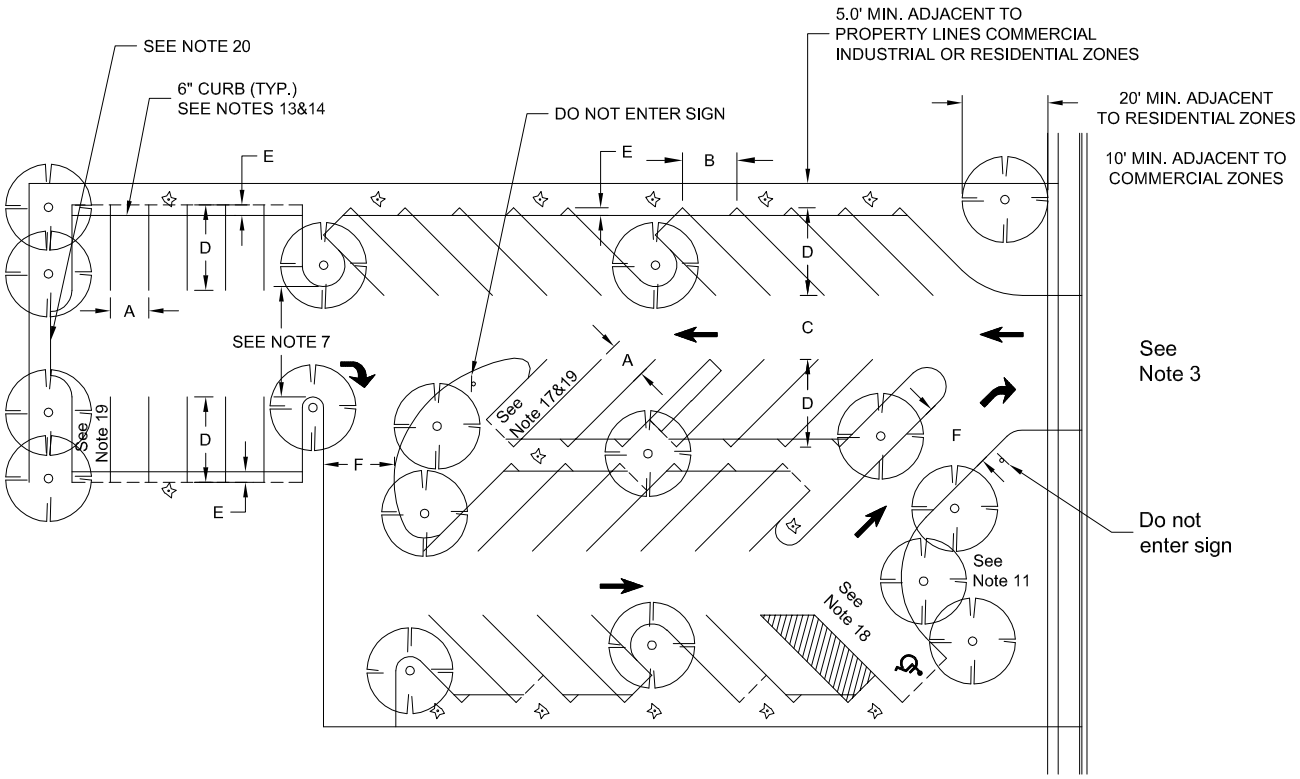

Minimum Parking Lot Standards						
Parking Angle*	"A"	"B"	** "C"	"D"	"E"	"F"
Parallel Parking	10	24	14	10	3	See Note 3
45°	9 9.5 10	12.7 13.4 14.2	15 14 14	20.5 20.8 21.2	1.8 1.8 1.8	17 17 17
60°	9 9.5 10	10.5 11 11.6	19 18 18	21.8 22.1 22.3	2.2 2.2 2.2	14 14 14
90°	9 9.5 10	9 9.5 10	25 24 24	20 20 20	2.5 2.5 2.5	14 14 14

* Dimensions for other parking angles must be evaluated separately for approval.
** For two-way traffic minimum is 24 feet.

Sheet 1 of 2

Dr. KT	No.	Date	Revision	Appr.	Approved By:	STD PLAN
Ch. WS	1	2/04	REVISION PARKING LOT LAYOUT		F. Wally Sandelin 7/7/11 F. Wally Sandelin City Engineer R.C.E. 39895 Date	134
Date 12\00						

CITY OF LODI

PUBLIC WORKS DEPARTMENT

Parking Standards

Notes:

1. A minimum number of parking spaces required is established by the City of Lodi Ordinance.
2. All parking stalls shall be marked in an acceptable manner.
3. Lots designed for more than four cars must have two-way access.
4. Where two parking angles can be used in a single lot, they shall be located in separate areas of the lot (except as shown on layout.)
5. Any parking layout necessitating a cul-de-sac or similar type of turning facility for reversing direction of travel in order to exit from the area or any parking spaces will generally be discouraged, and it should be approved by the City Staff prior to the incorporation into the plan.
6. Residential parking for more than four cars regardless of zoning designation shall not be designed to require backing out onto any public street Rights-of-Way.
7. Two-way traffic aisles shall be a minimum of 24 feet wide.
8. In any non-residential parking condition parking or backing area within a parking lot shall not extend into the public Rights-of-Way, regardless of zoning designation.
9. When a long driveway having only a single ingress is necessary within a development, provisions should be made for the maneuvering of emergency vehicles and the arrangement approved by City Staff prior to its incorporation into the plan.
10. All parking lots shall have an adequate structural section and shall be paved with a minimum of two inches of asphalt concrete.
11. All unusable areas shall be landscaped where practical.
12. Landscaped areas within or adjacent to the parking area shall provide for a minimum of one shade tree for every four parking stalls. Depending on type and size of shade tree, requirements may be modified by the City Site Plan and Architectural Review Committee.
13. Six-inch high concrete curbs shall separate all paved and landscaped areas.
14. Concrete curbing shall be used as wheel stops where possible. The use of bumper blocks is discouraged.
15. Landscaped areas shall be provided between asphalt areas and all building structures, fences and property lines. Hardscaping may be used where pedestrian access is a necessity as determined by the City Site Plan and Architectural Review Committee.
16. Landscaping shall conform to the City of Lodi Landscape Guidelines.
17. End stalls should be protected from the turning movements of other cars with a minimum 5' landscape planter.
18. Handicapped stalls shall be be a min. of 9' wide plus an adjacent 8' min. access zone to accommodate Van accessible parking. If there is more than one stall at least one must meet the Van accessible size. The additional stalls shall be a min. of 9' wide plus an adjacent 5' min. access zone, per title 24, Chapter 2-7102, California Administrative Code.
19. End stalls and stalls adjacent to curbings shall be a minimum of ten feet wide.
20. Dead end 90° parking shall be provided with adequate turning room.
21. Parking requirements for the interior of parking lots on industrial lots surrounded solely by heavy industrially zoned properties may be modified by the Site Plan and Architectural Review Committee.

Reference: Planning Commission Resolution 77-2, 7/11/77

Dr. KT	No.	Date	Revision	Appr.
Ch. WS	1	2/04	TEXT ADDITION & REVISION	
Date 2/12/04				

Approved By: F. Wally Sandelin, City Engineer, R.C.E. 39895 — 2/12/04 Date

STD PLAN 134

CITY OF LODI

PUBLIC WORKS DEPARTMENT

Vertical–Type Curb, Gutter, Sidewalk and Residential Driveway

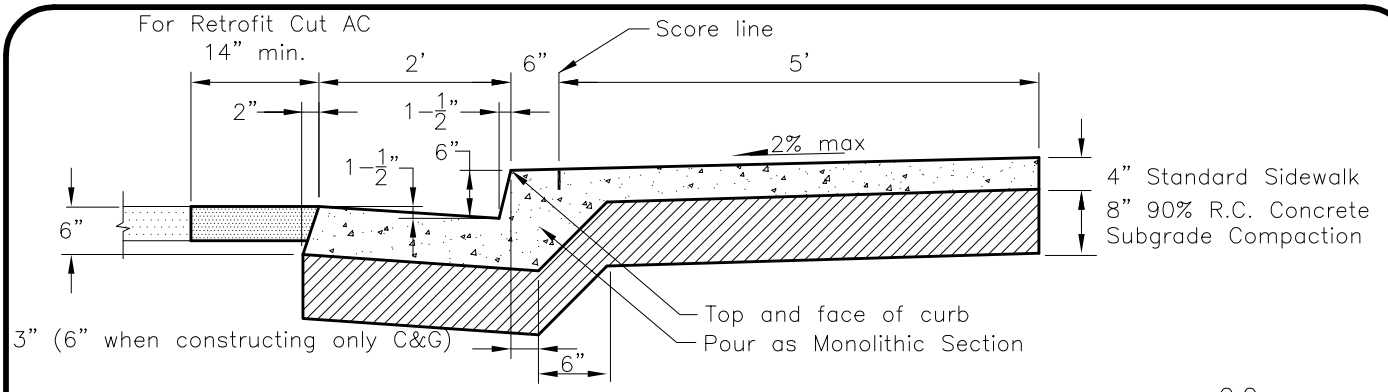

Curb, Gutter, & Sidewalk Section

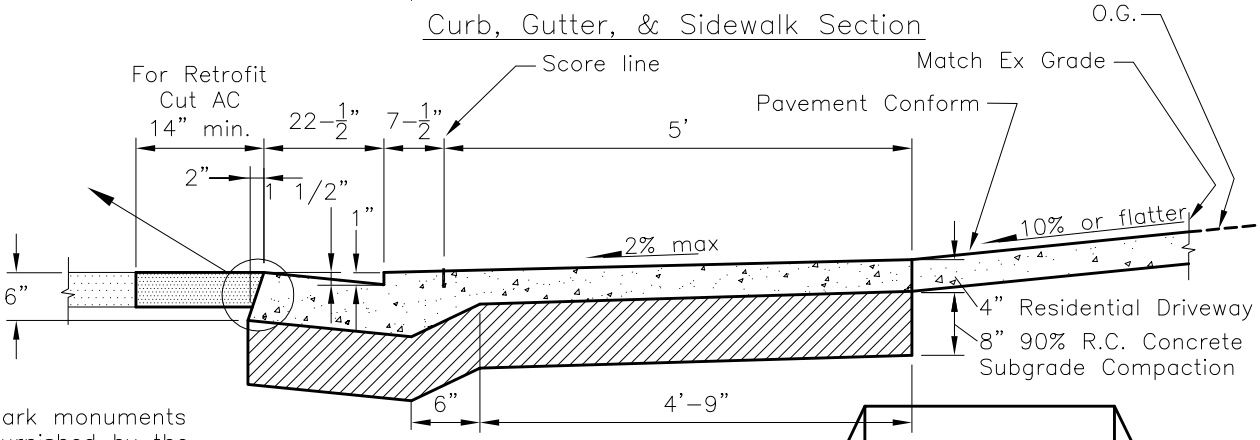

Residential Driveway Section

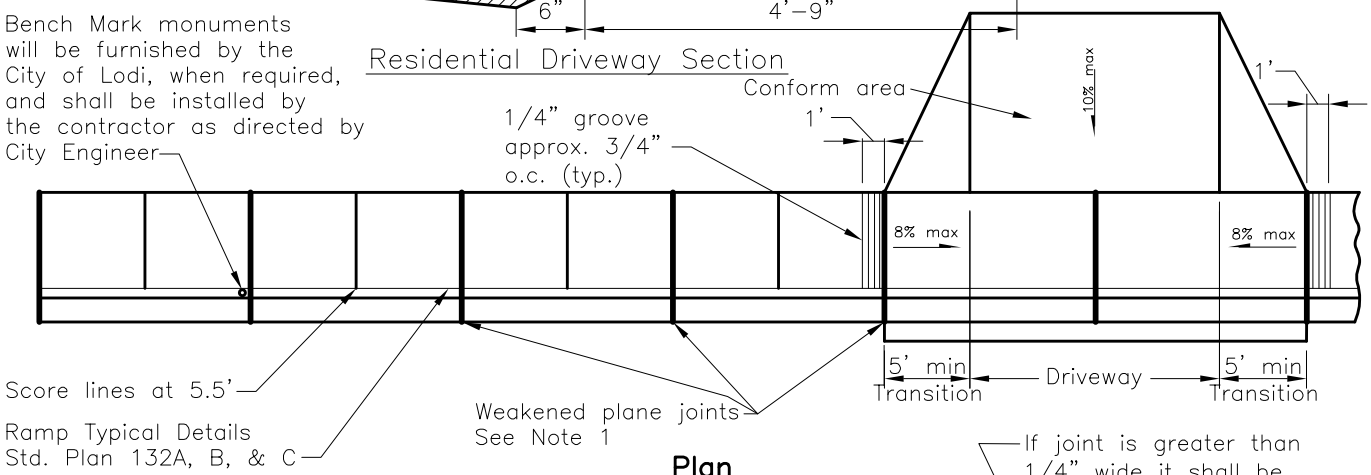

Plan

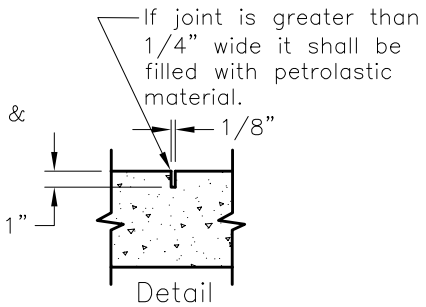

Detail

Weakened Plane Joint

Notes:

1. Construct weakened plane joints at 11' and at ends of transitions & centerline of driveway.
2. Use impervious membrane cure. Broom finish.
3. Class B concrete per Section 90 of Std. Spec., 1–1/2" max. aggregate.
4. Construct expansion material at 200' max.
5. All exposed edges shall be rounded to 1/2" radius.

Dr. KT	No.	Date	Revision	Appr.
Ch. WS	1	9/03	ADDED CURB HEIGHT	
Date 9/08	2	9/07	MINOR REVISIONS	

Approved By: F. Wally Sandelin, City Engineer, R.C.E. 39895 — 9/07 Date

STD PLAN 135

CITY OF LODI

PUBLIC WORKS DEPARTMENT

Rolled Curb, Gutter & Sidewalk

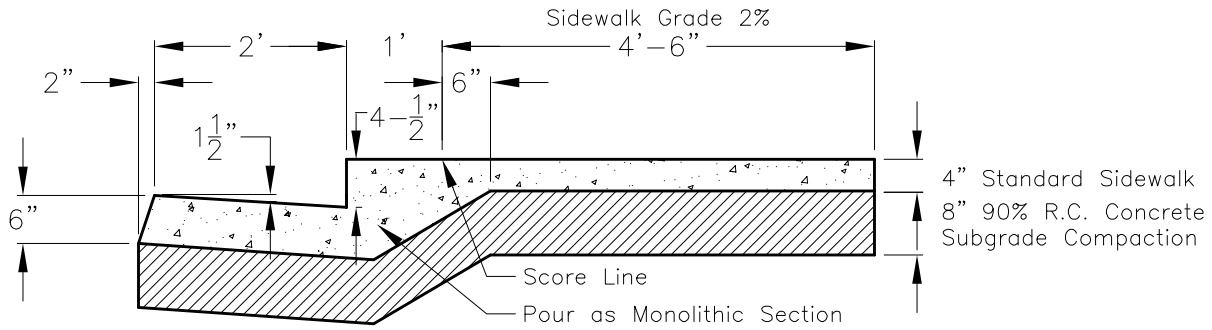

Curb Return Section

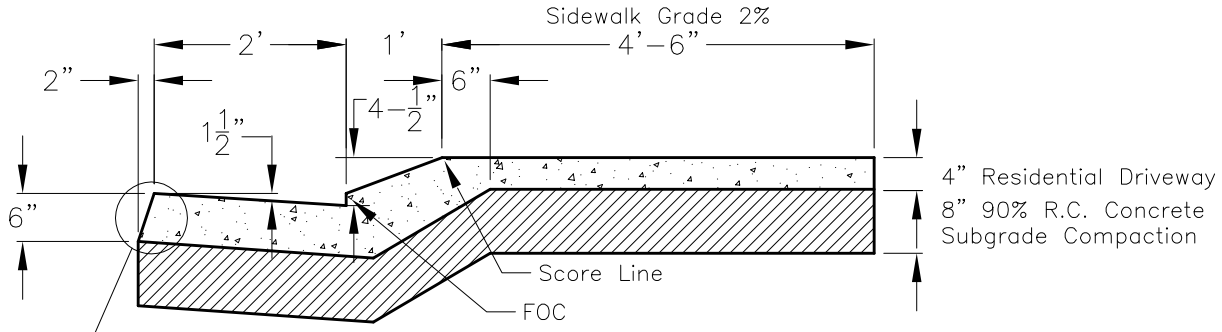

Sidewalk Section

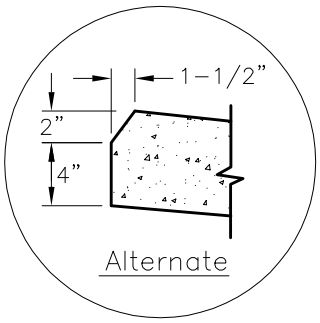

Alternate

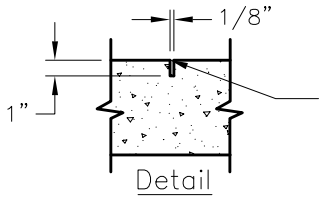

If joint is greater than 1/4" wide it shall be filled with petrolastic material.

Detail

Weakened Plane Joint

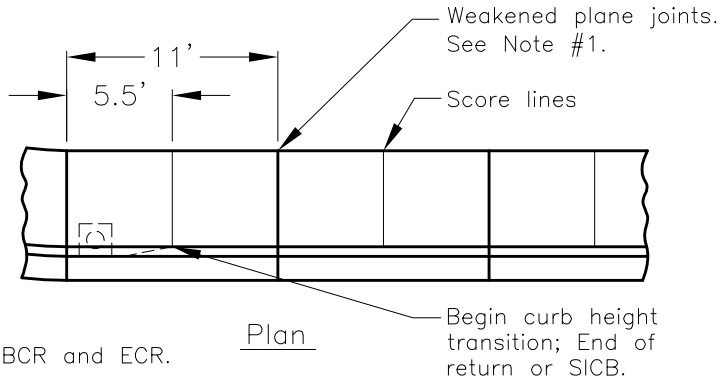

Plan

Notes:

1. Construct weakened plane joints at 11'.
2. Use impervious membrane cure. Broom finish.
3. Class B concrete per Section 90 of Std. Spec., 1-1/2" max. aggregate.
4. Construct expansion joints at 200' max. and at BCR and ECR.
5. All exposed edges shall be rounded to 1/2" radius.

Dr. KT	No.	Date	Revision	Appr.	Approved By:	STD PLAN
Ch. WS					F. Wally Sandelin 12/28/00	136
Date 12/00					F. Wally Sandelin, City Engineer, R.C.E. 39895 — Date	

CITY OF LODI

PUBLIC WORKS DEPARTMENT

Tree Well Sprinkler System Installation

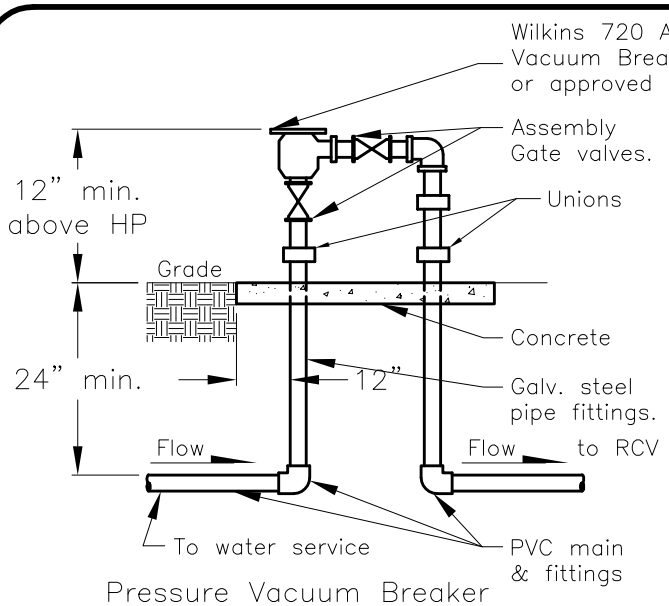

Pressure Vacuum Breaker

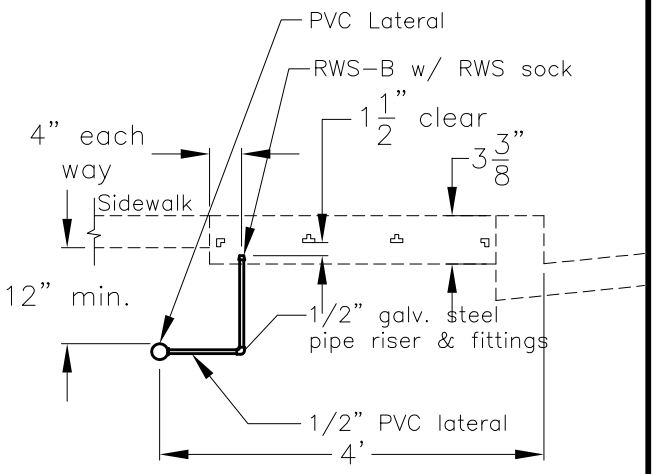

Bubbler Riser

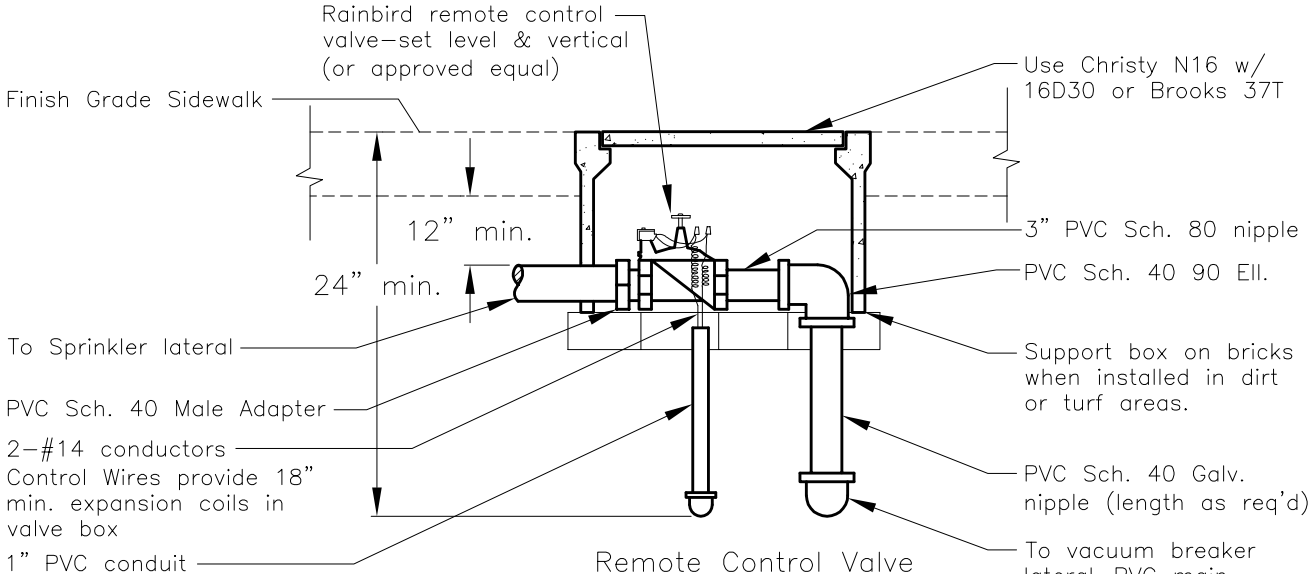

Remote Control Valve
Not to Scale

Notes:

1. Use Rainbird, or Irri-trol sprinkler system controller, disconnect switch required. Install controller and disconnect in post mounted, weatherproof cabinet (w/hasp for City padlock). Breaker box must accommodate City Master padlock and must be made of metal.
2. Plastic pipe shall be Polyvinyl Chloride (PVC), Type 1120 or 1220. Class per Table. Threaded pipe shall be Schedule 80 PVC. Fittings shall be molded, medium weight, Schedule 40 PVC. Street crossings, including control wire conduit, shall be steel pipe.
3. Steel pipe shall conform to ASTM A-120 and shall be Schedule 40, galvanized. Fittings shall be 150 lbs., banded pattern, galvanized malleable iron.
4. Control wires shall be installed in 1" conduit.

Sheet 1 of 2

Dr. KT	No.	Date	Revision	Appr.
Ch. WS	1	2/04	CHANGED NOTATION AND	
Date 12/00			REVISED NOTE 1	

Approved By: F. Wally Sandelin, City Engineer, R.C.E. 39895 — 2/12/04 Date

STD PLAN 137

CITY OF LODI

PUBLIC WORKS DEPARTMENT

Tree Well Sprinkler System Installation

PVC Pipe Class Table	
Size	Class
In turf/planter	
1/2"	Class 315 PVC
3/4"	Class 200 PVC
1"+	Class 160 PVC
Mainline (constant pressure)	
2"+	Class 200 PVC
Under concrete or paving	
All	Schedule 80

Dr. KT	No.	Date	Revision	Appr.	Approved By: F. Wally Sandelin, City Engineer, R.C.E. 39895	12/28/00 Date	STD PLAN 137
Ch. WS							
Date 12/00							

CITY OF LODI

PUBLIC WORKS DEPARTMENT

Grated Tree Well

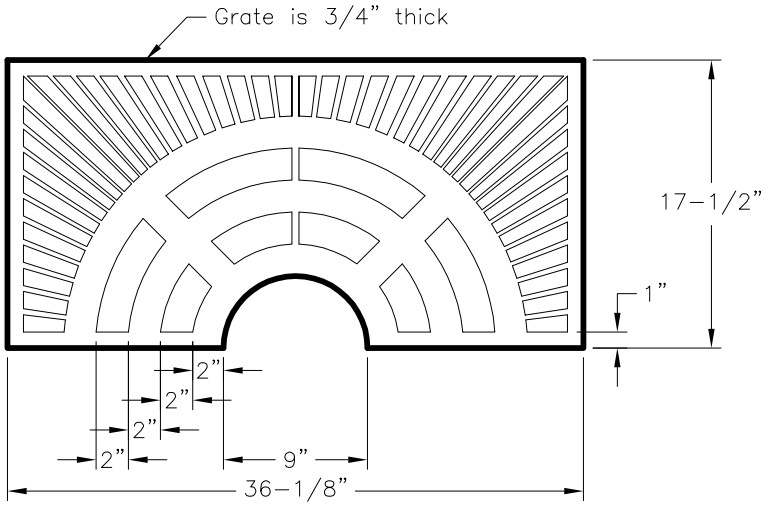

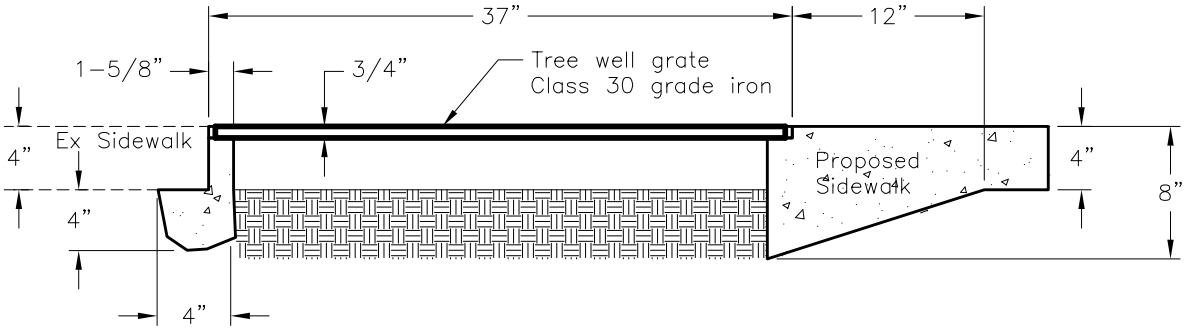

Notes:

1. If the tree is not planted, the opening shall be barricaded.
2. When tree wells are installed in the existing sidewalk, the sidewalk shall be sawed a minimum of 1-1/2" in depth.
3. Place one #4x2' rebar diagonally at each corner.
4. Reinforcing steel shall not be placed through sidewalk weakened plane joints.

Dr. KT	No.	Date	Revision	Appr.	Approved By:	STD PLAN
Ch. WS					F. Wally Sandelin, City Engineer, R.C.E. 39895 — 12/28/00 Date	138A
Date 12/00						

CITY OF LODI

PUBLIC WORKS DEPARTMENT

Grated Tree Well

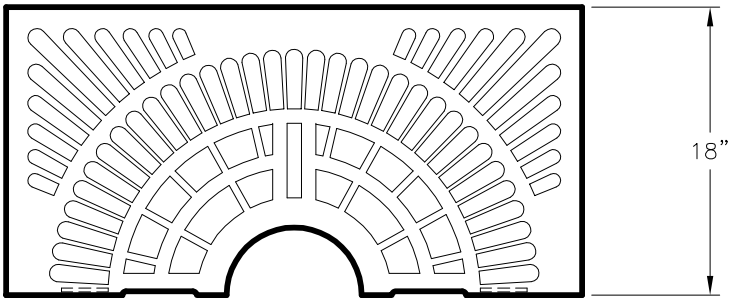

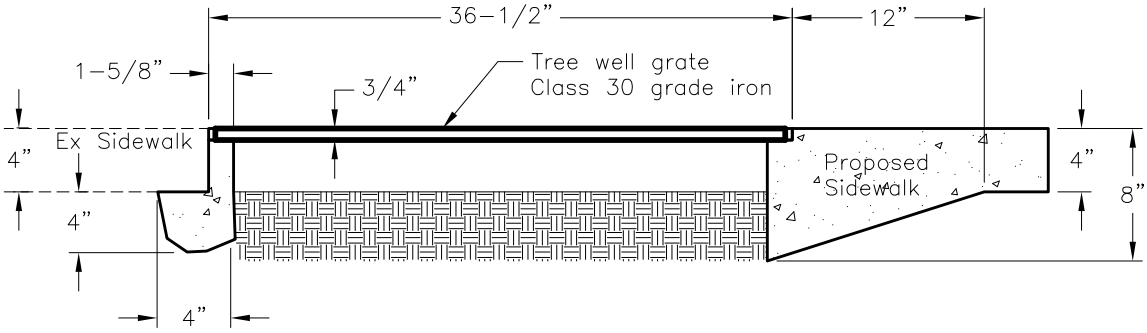

Notes:

1. If the tree is not planted, the opening shall be barricaded.
2. When tree wells are installed in the existing sidewalk, the sidewalk shall be sawed a minimum of 1-1/2" in depth.
3. Place one #4x2' rebar diagonally at each corner.
4. Reinforcing steel shall not be placed through sidewalk weakened plane joints

Dr. KT	No.	Date	Revision	Appr.	Approved By:	STD PLAN
Ch. WS					F. Wally Sandelin 12/28/00	138B
Date 12/00					F. Wally Sandelin, City Engineer, R.C.E. 39895 — Date	

CITY OF LODI

PUBLIC WORKS DEPARTMENT

Dead–end Barricade (Fence Type)

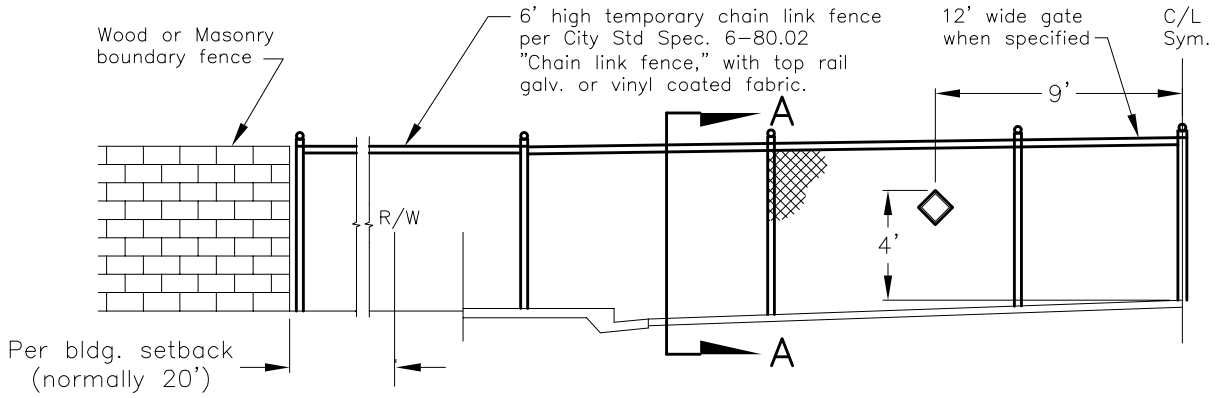

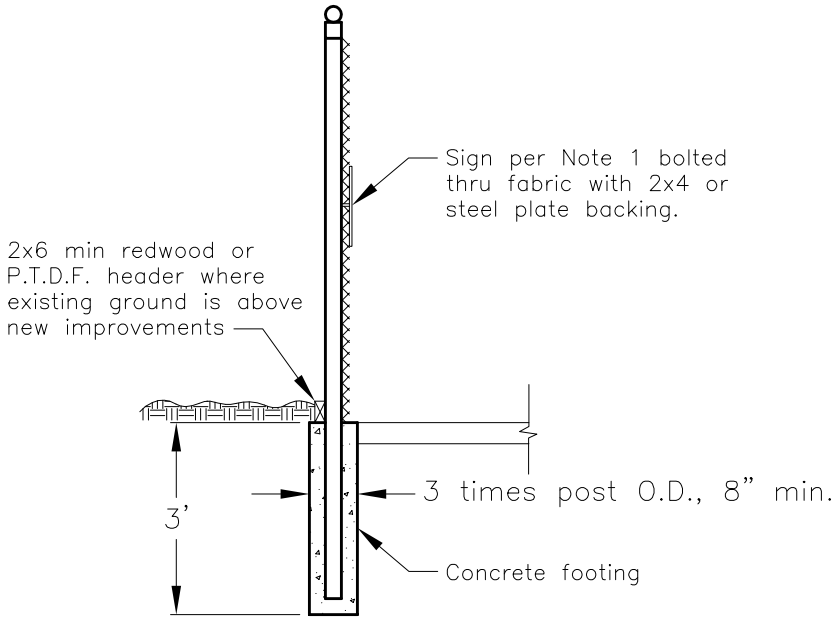

Section A–A

Notes:

1. Install two fully reflective red Type N Markers, 18"x18".
   Backing: 0.080" aluminum 6061T6 alloy
   Reflectorization: high intensity grade
   Mounting: two 5/16" bolts with double nuts and backing, bend bolts.

2. Serviceable portions of barricades being removed may be reused at new location as approved by the Engineer.

Dr. KT	No.	Date	Revision	Appr.	Approved By:	STD PLAN
Ch. WS					F. Wally Sandelin 12/28/00	139
Date 12/00					F. Wally Sandelin, City Engineer, R.C.E. 39895 — Date	

CITY OF LODI

PUBLIC WORKS DEPARTMENT

Tree/Tree Well Planting and Tree Irrigation

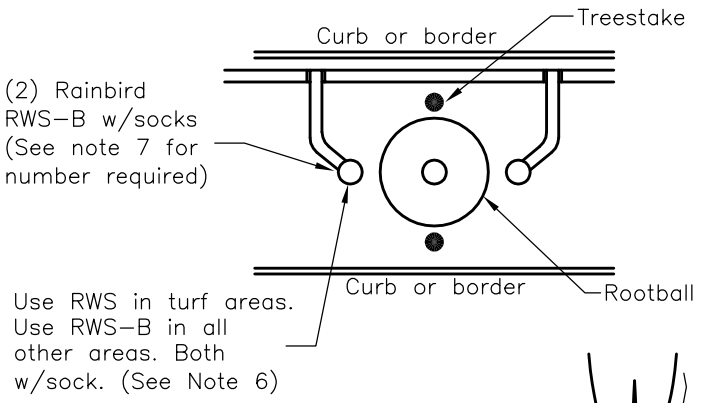

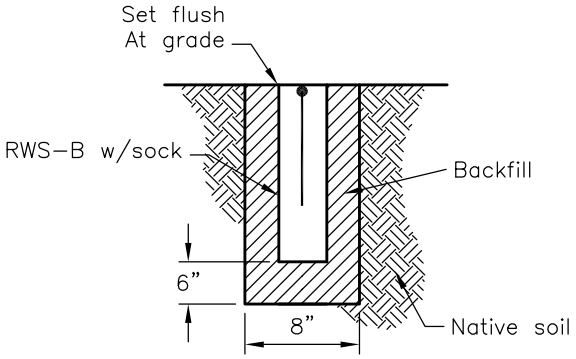

Bubbler Installation

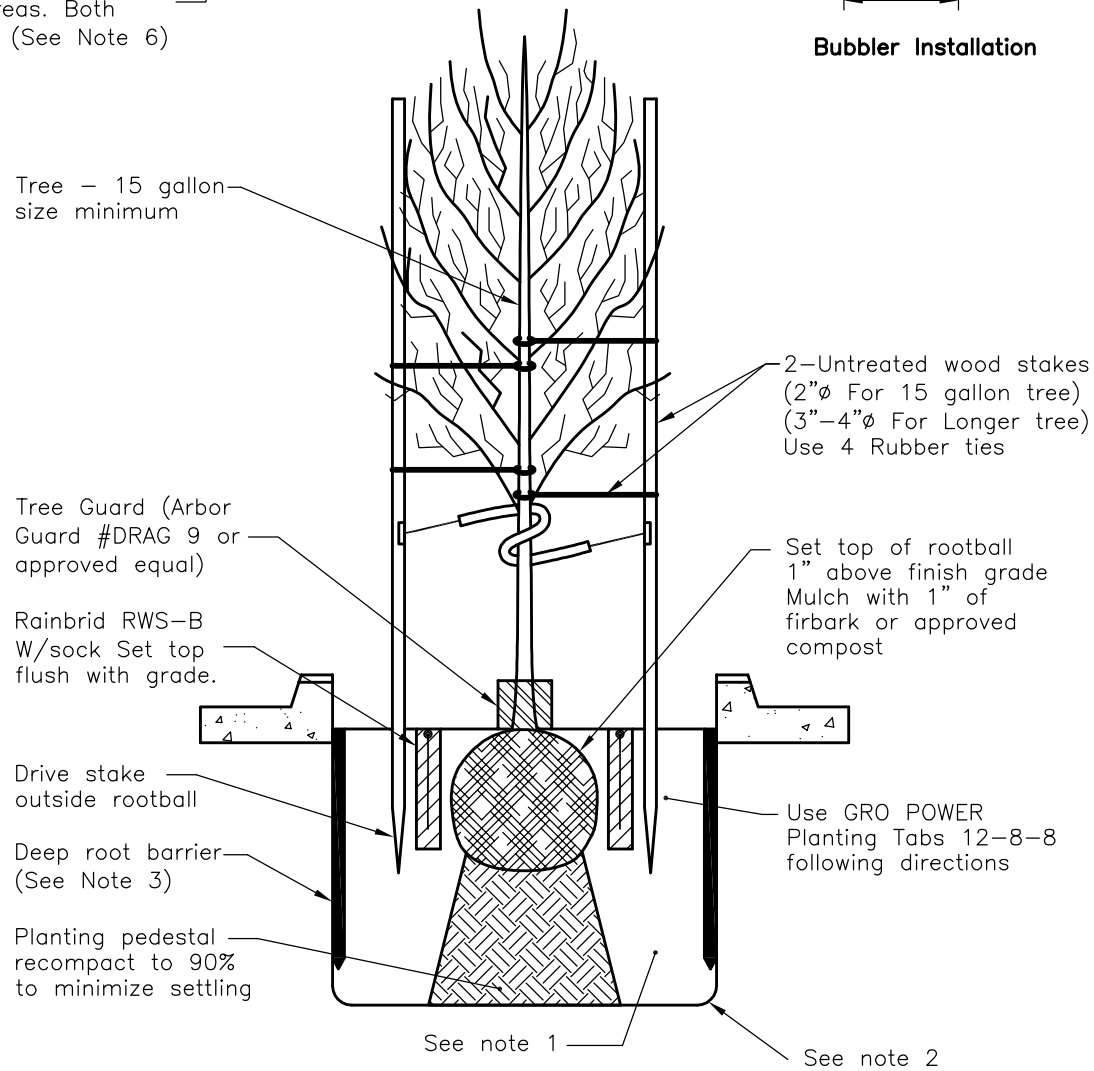

Sheet 1 of 2

Dr. KT	No.	Date	Revision	Appr.
	1	9/03	ADDED NOTES 7 THRU 10	
Ch. WS	2	2/04	REVISED BUBBLER MODEL #'S	
			AND TREE STAKE MODEL	
Date 08/08	3	8/08	ADDED STAKE & TIE NOTE	

Approved By: F. Wally Sandelin, City Engineer, R.C.E. 39895 — 2/12/04 Date

STD PLAN 140

CITY OF LODI

PUBLIC WORKS DEPARTMENT

Tree/Tree Well Planting and Irrigation Notes

Notes:

1. When soil analysis is required (by City officials prior to job commencement), all backfill soil shall have additional fertilizer and amendments per soil analysis. All backfill to be clean (preferred native, no imported soil) with 10% by volume approved compost, to be placed firmly but uncompacted. Thoroughly soak with water to settle.
2. The entire tree planting area (tree well, island, or strip) shall be free of deleterious materials including concrete and rocks. The pit shall be a minimum of two times wider and only deep enough for the tree to be 1" above grade Scarify Planting Pit And All Four Sides Of Rootball Prior To Planting.
3. Six (6) panels of 24" x 24" Deep Root root barrier (Model #DRUB24, or approved equal) will be required around tree planting area. Place 3 panels at back of curb and 3 panels along edge of sidewalk.
4. Deleted.
5. Remove nursery stake when setting new stakes.
6. Air tubes shall be set immediately next to the root ball. Apply approved pre-emergent herbicide prior to placement of fir bark or mulch.
7. Install three (3) RWS-B air tubes in tree well locations larger than 5' by 5' and install two (2) RWS-B air tubes in planter strip areas or area less then 5' by 5'. Air tubes to be a minimum 18 inches in length.
8. If a discrepancy between this standard and actual on-site conditions occurs, the Contractor is to notify the City Representative immediately, before proceeding with his work, for a decision. The City reserves the right to make deletions, additions, or substitutions in the field as necessary.
9. All trees must meet the standards set forth in ANSI Z60.1 - 1996, (or latest revision) American Standards for Nursery Stock. Particular attention should be paid to section 1.4 container grown specifications. All trees will be inspected for acceptable form and condition by the City Tree Operations Supervisor prior to planting. Contact Tree Operations Supervisor at 333-6740 for tree inspection and approval. Unacceptable trees will be replaced by the contractor.
10. City Tree Operations Supervisor and Public Works Inspector shall be notified at least two working days prior to estimated time of setting-out trees so a mutually acceptable time can be scheduled for final tree placement. All trees shall be placed in approximate locations shown on plans by Contractor prior to arrival of city personnel. Final adjustments of locations shall be made by City personnel.
11. Tree spacing shall be the following minimum spacing distances:
    Trees: 25'-0" O.C. min.
    Trees to Street Lights 10'-0" O.C. min.
    Trees to Service Laterals: 5'-0" O.C. min.

Dr. KT	No.	Date	Revision	Appr.
	1	9/03	ADDED NOTES 7 THRU 10 &	
Ch. WS			REVISED NOTES 3 & 4	
	2	2/04	REVISED NOTES 2, 4 & 7	
Date 9/08	3	9/08	REVISED NOTES 1 & 4	

Approved By: F. Wally Sandelin, City Engineer, R.C.E. 39895 — 2/12/04 Date

STD PLAN 140

CITY OF LODI

PUBLIC WORKS DEPARTMENT

Various Crosswalk Layouts

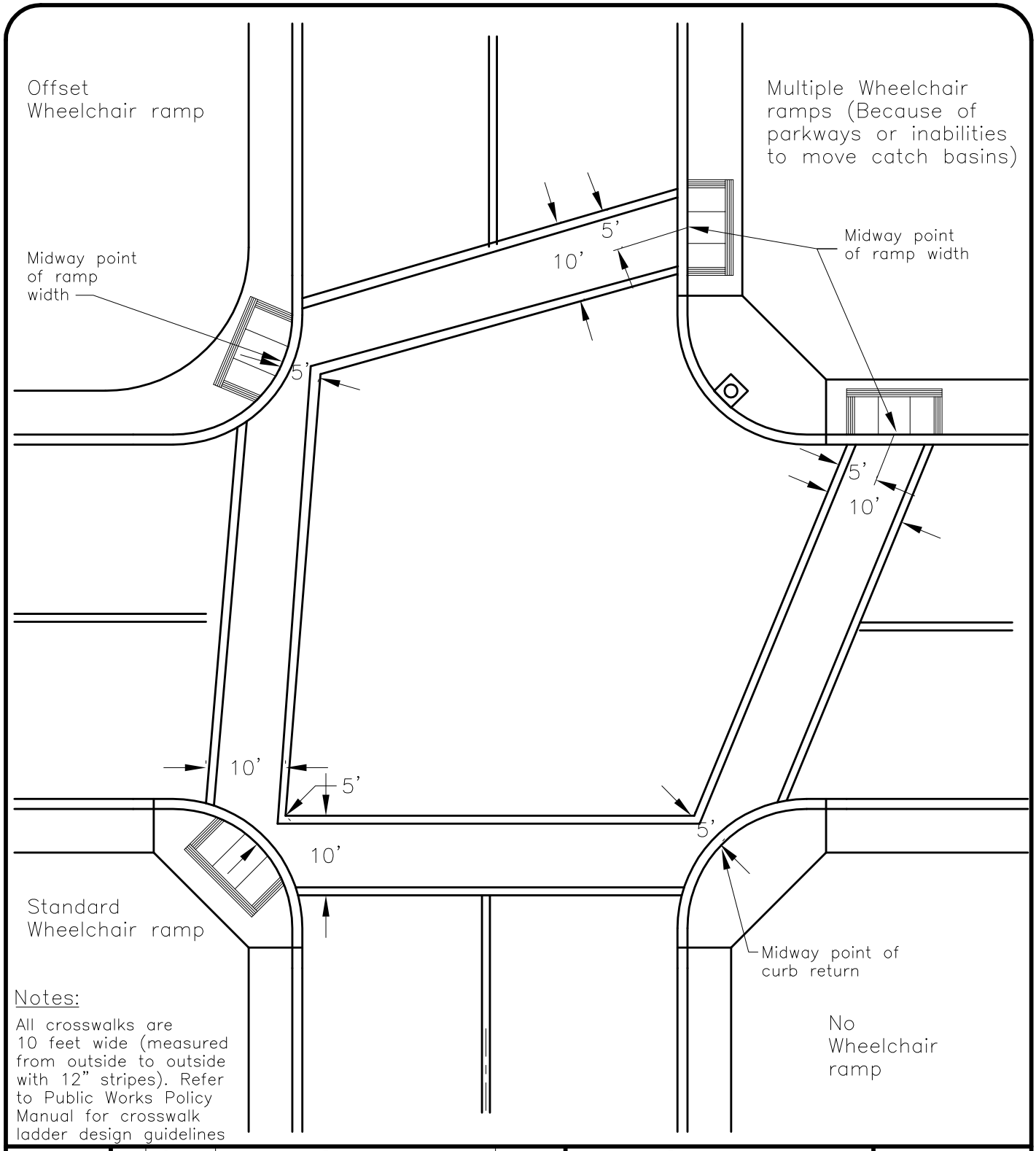

Notes:

All crosswalks are 10 feet wide (measured from outside to outside with 12" stripes). Refer to Public Works Policy Manual for crosswalk ladder design guidelines

Dr. KT	No.	Date	Revision	Appr.	Approved By:	STD PLAN
Ch. WS					F. Wally Sandelin 12/28/00	141
Date 12/00					F. Wally Sandelin, City Engineer, R.C.E. 39895 — Date	

CITY OF LODI

PUBLIC WORKS DEPARTMENT

Street Name Sign System

Plate: 0.063" Aluminum panel–White engineer grade reflective background with 1/4–inch non reflective black border inset 1/4–inch.

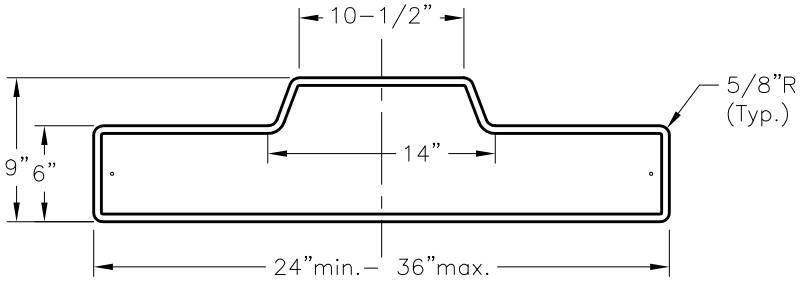

Legend: 4" upper case street name & 2" block number with 1–3/4" arrow (all black).

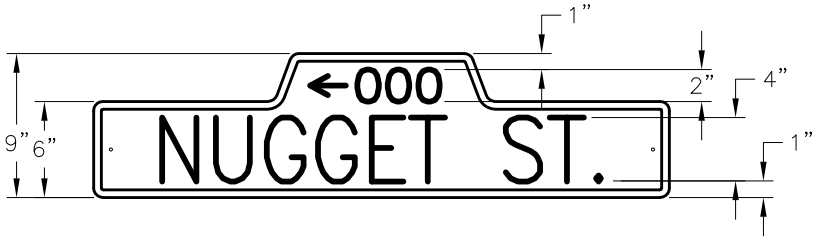

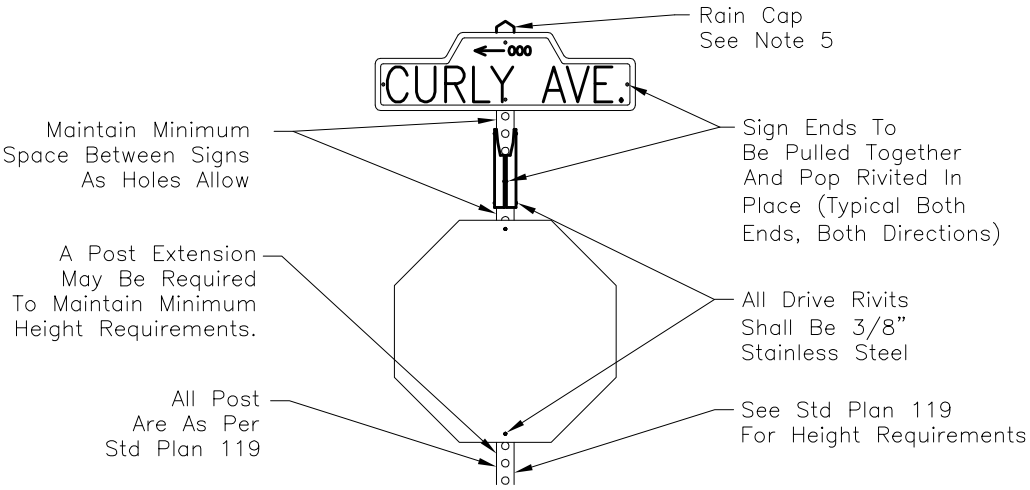

SIGN MOUNTING:

Notes:

1. Block Numbers Shall Be Rounded To The Nearest Hundred.
2. Block Arrow Shall Point In The Direction Of The Block; Not Across The Street.
3. When Cardinal Direction Is Part Of The Street Name, A 2" Upper Case Initial Shall Follow The Block Number, (I.E. 00N, 00S, 00E, 00W).
4. Legend Shall Be Black And Non–Reflective.
5. Cap Post With Square Rain Cap. Post Top Shall Be 1 1/2" Higher Than Top Of Sign.

Dr. KG	No.	Date	Revision	Appr.
Ch. WS	1	9/03	CHANGED TO SQ POST	
Date 12/00				

Approved By: F. Wally Sandelin, City Engineer, R.C.E. 39895 — 9/25/02 Date

STD PLAN 142

CITY OF LODI

PUBLIC WORKS DEPARTMENT

Concrete Slab for Basement Access Spanning Detail

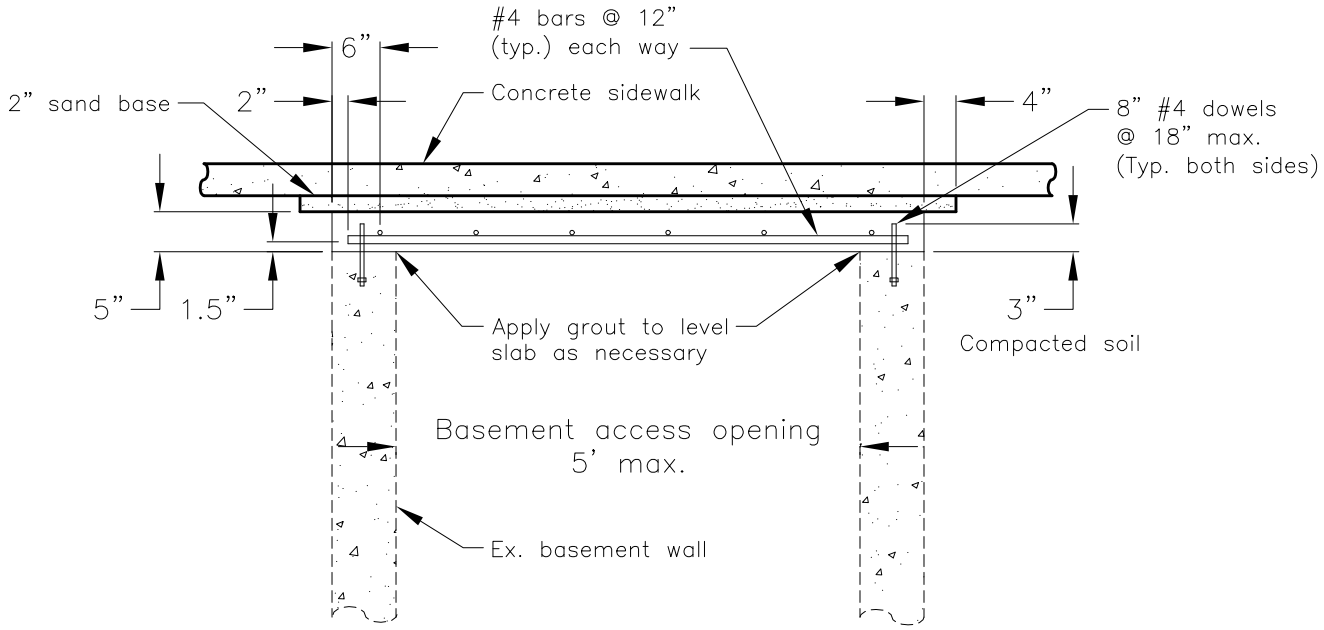

Section A–A

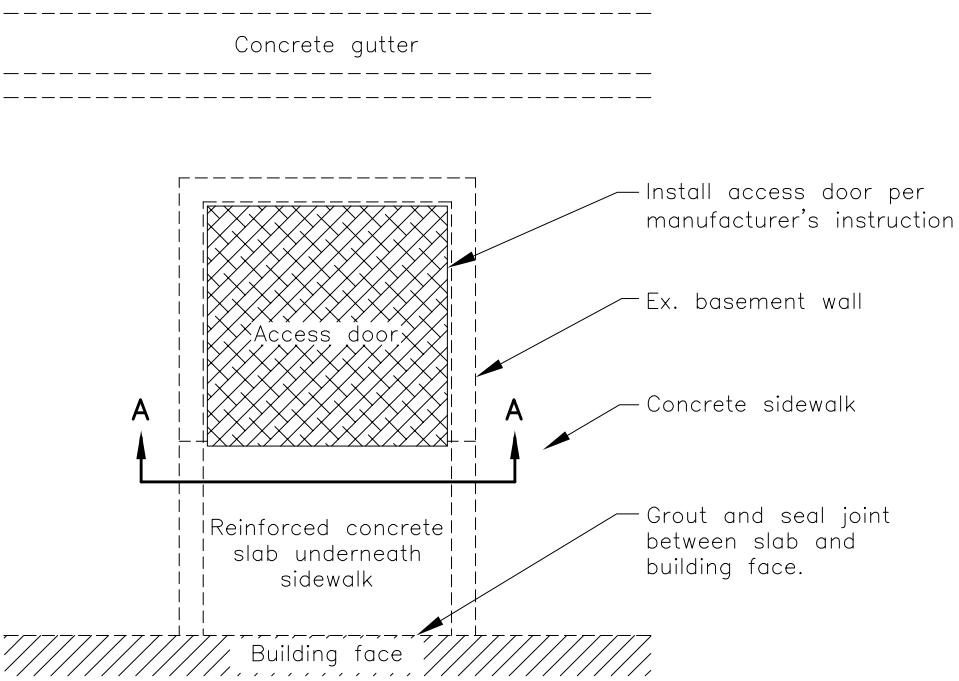

Notes:

1. All steel reinforcements shall be Grade 40 minimum.
2. All concrete shall have a minimum strength of 2,500 psi @ 28 days.

Dr. KT	No.	Date	Revision	Appr.	Approved By: F. Wally Sandelin, City Engineer, R.C.E. 39895 — 12/28/00 Date	STD PLAN
Ch. WS						143
Date 12/00						

CITY OF LODI

PUBLIC WORKS DEPARTMENT

Parking Lot Planters and Tree Wells

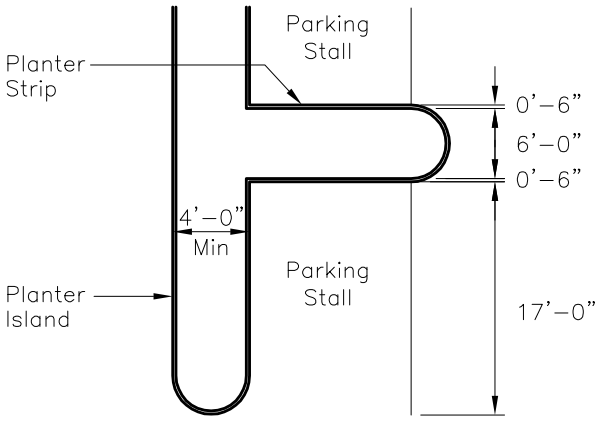

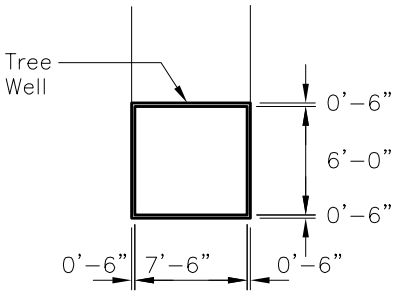

Planter Specification

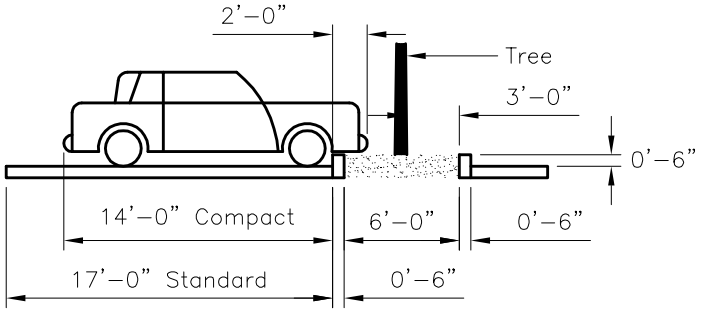

Poured Curb with Overhang

Notes:

1. Minimum Planter Sizes: A minimum 6'–0" by 6'–0" planting area shall be provided for each tree planted in a tree well or planter strip. A minimum 4'–0" by 8'–0" planting area shall be provided for each tree planted in an island planter. Planter dimensions are measured from the interior side of the curb. (See illustration)

2. Tree must be planted behind the curb at a distance no less than one half the minimum planter width or otherwise recommended by the city's arborist. A 2'–0" foot overhang for vehicles into the planter area is allowed as long as it does not overhang planter width or otherwise recommended by the city's arborist. A 2'–0" foot overhang into the planter area is allowed as long as it does not overhang within the required parking lot setback area or pedestrian walkway.

3. Materials: Planters shall contain soil, shrubs and/or living ground cover with 4" of bark mulch. Interlocking pavers and decomposed granite may also be utilized in heavily used areas.

Dr. KT	No.	Date	Revision	Appr.	Approved By:	STD PLAN
Ch. WS					F. Wally Sandelin 9/25/02	145
Date 12/00					F. Wally Sandelin, City Engineer, R.C.E. 39895 — Date	

CITY OF LODI

PUBLIC WORKS DEPARTMENT

STREET NAME SIGN MAST ARM MOUNTING DETAILS

MOUNTING DETAILS

NO MAST ARM

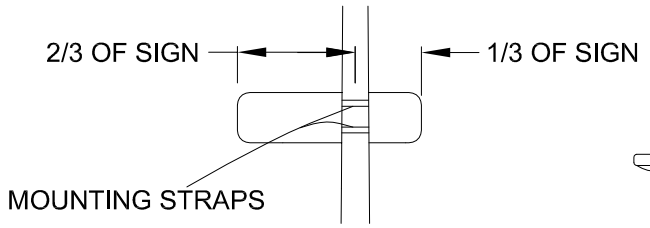

WITH MAST ARM

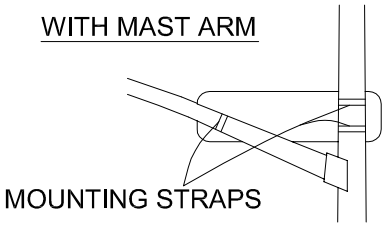

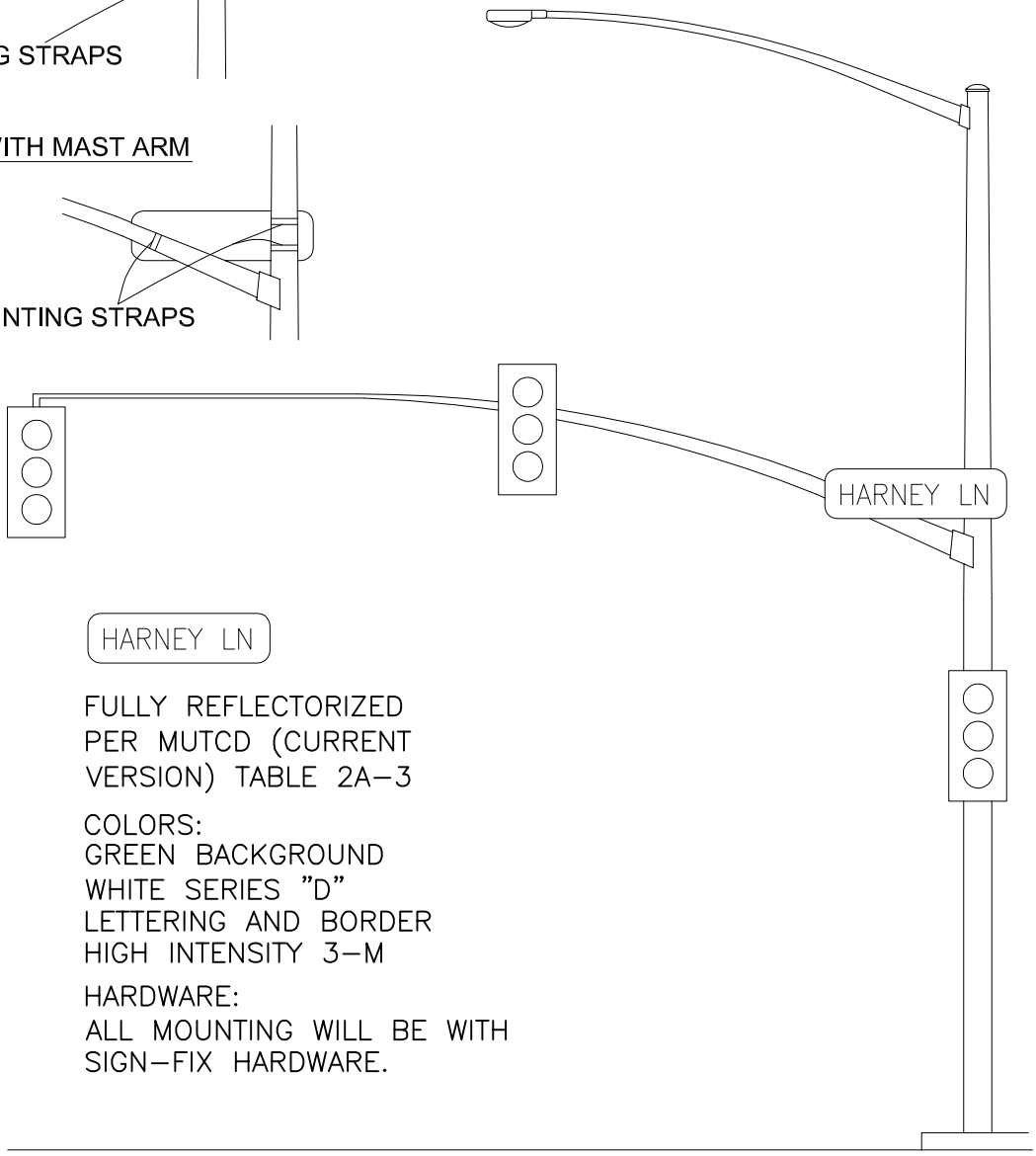

FULLY REFLECTORIZED PER MUTCD (CURRENT VERSION) TABLE 2A–3

COLORS:
GREEN BACKGROUND
WHITE SERIES "D" LETTERING AND BORDER
HIGH INTENSITY 3–M

HARDWARE:
ALL MOUNTING WILL BE WITH SIGN–FIX HARDWARE.

Dr. DK	No.	Date	Revision	Appr.	Approved By:	STD PLAN
Ch. PJF					7/24/14	146
Date 7/24/14					Charles Swimley City Engineer/Deputy Public Works Director Date R.C.E. 52842	

CITY OF LODI

PUBLIC WORKS DEPARTMENT

UNIMOUNT MOUNTING HARDWARE DETAILS

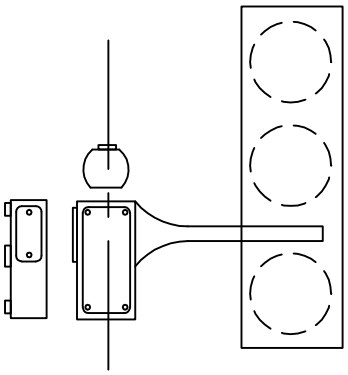

TYPICAL VEHICLE SIGNAL MOUNTING

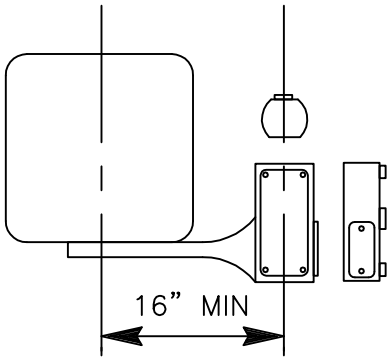

TYPICAL PEDESTRIAN SIGNAL MOUNTING

NOT TO SCALE

Dr. JSB	No.	Date	Revision	Appr.	Approved By:	STD PLAN
Ch. PJF					F. Wally Sandelin 2/12/04	147
Date 2/04					F. Wally Sandelin, City Engineer, R.C.E. 39895 — Date	

CITY OF LODI

PUBLIC WORKS DEPARTMENT

PEDESTRIAN PUSH BUTTON SIGN DETAIL

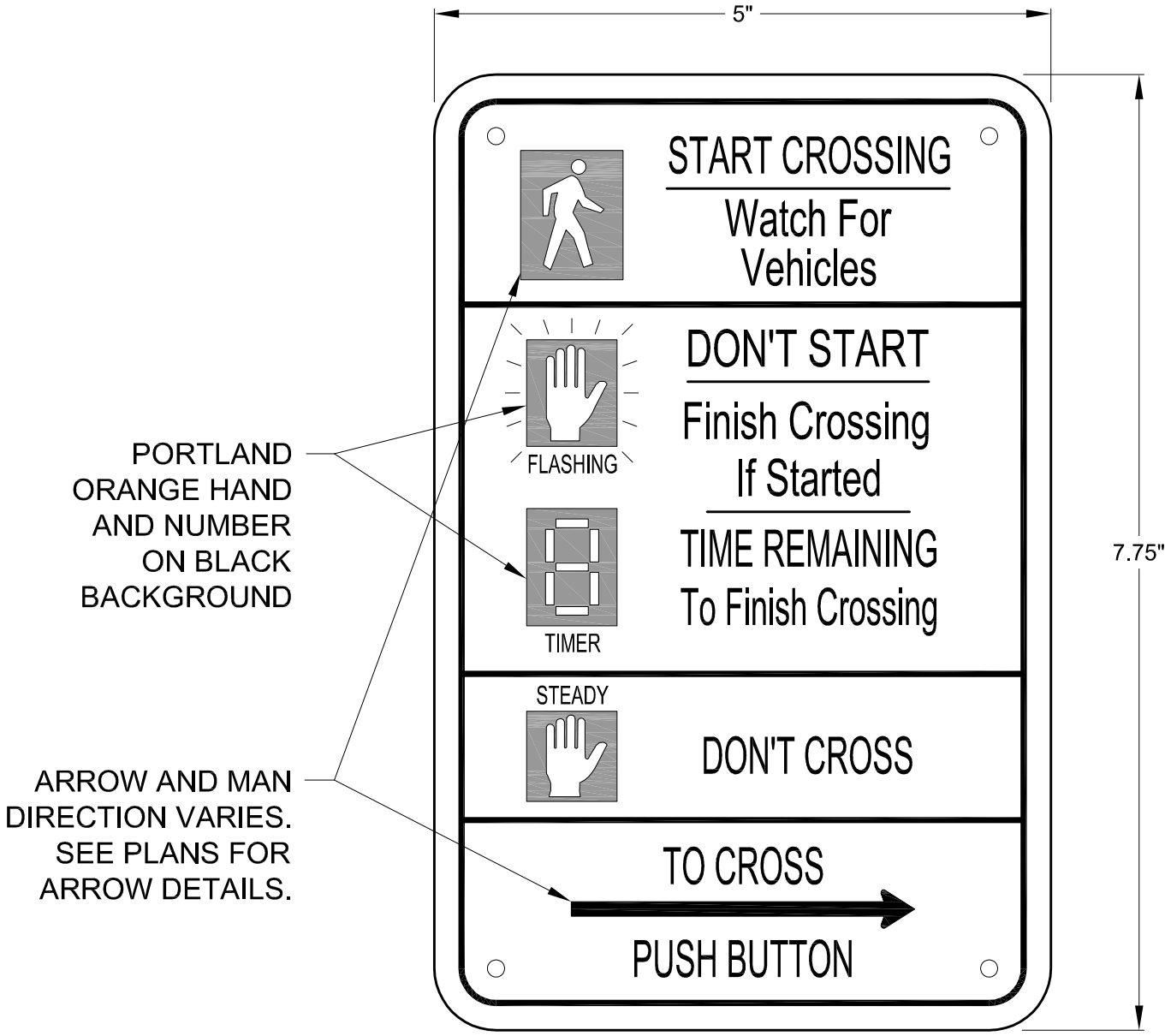

SPECIAL SIGN FOR PED PUSH BUTTONS

N.T.S.

Dr. DK	No.	Date	Revision	Appr.	Approved By:	STD PLAN
Ch. PJF					Lyman Chang, City Engineer, RCE No. 53149 — 3/28/17 Date	148
Date 3/27/17						

CITY OF LODI

PUBLIC WORKS DEPARTMENT

Standard Residential Driveway Size and Location

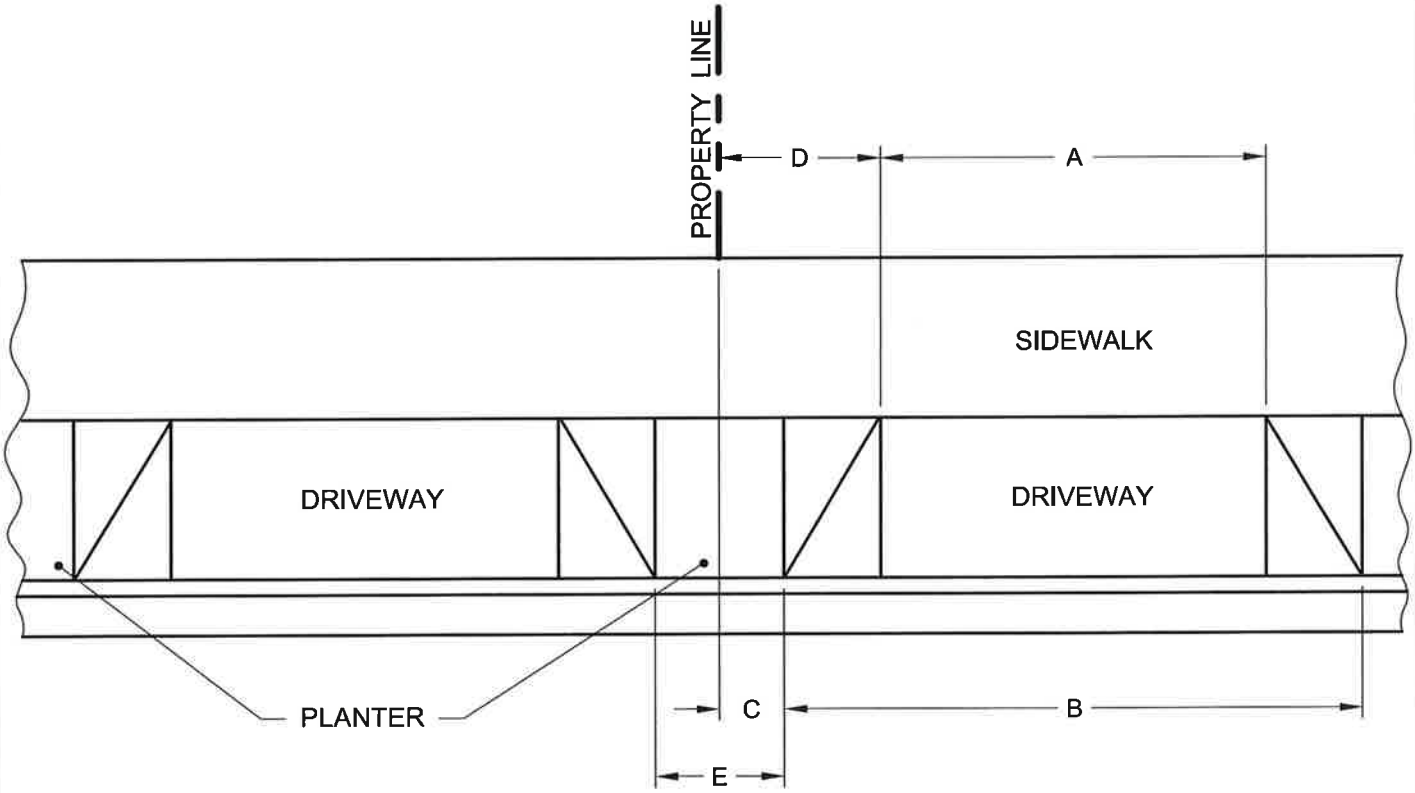

NOTE:

1. CURB RAMPS SHALL BE CONSIDERED IN A SIMILAR MANNER FOR THE PURPOSE OF DRIVEWAY LOCATIONS.

2. DEVIATION FROM THIS STANDARD PLAN REQUIRES CITY ENGINEER APPROVAL.

DIMENSIONS:

A = 12' MIN, 35' MAX

B ≤ 50% LOT FRONTAGE

C = 2' MIN

D = 5' MIN

E = 4' MIN

E ≠ 13' to 21'

Dr. JP	No.	Date	Revision	Appr.	Approved By:	STD PLAN
Ch. SN					Lyman Chang, City Engineer, RCE No. 53149 — 3/15/17 Date	149
Date 3/15/17						

CITY OF LODI

PUBLIC WORKS DEPARTMENT

BENCHMARK

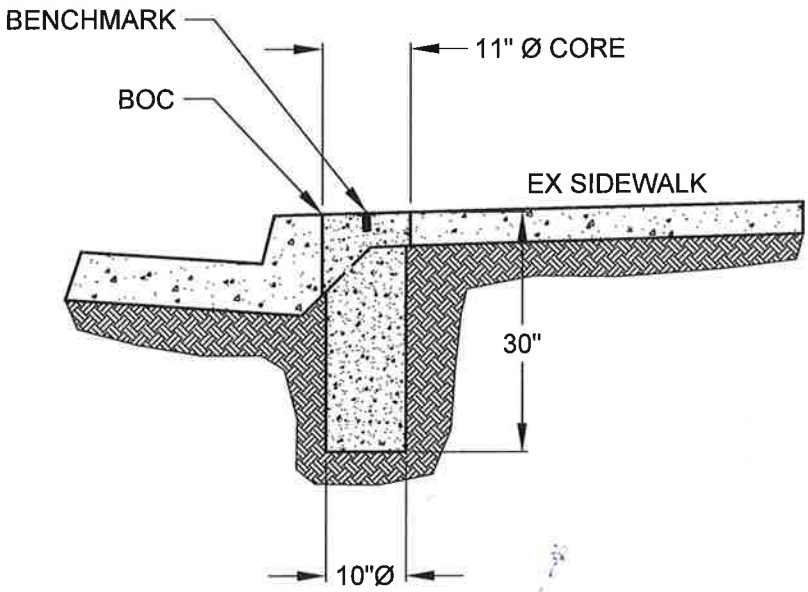

MONUMENT IN EXISTING SIDEWALK

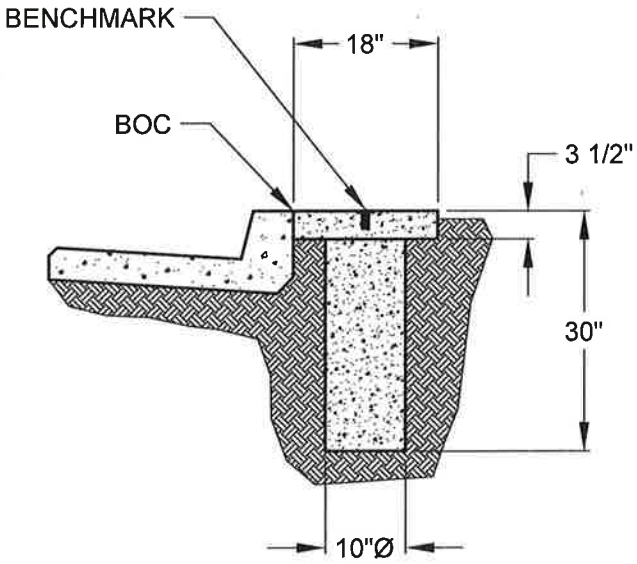

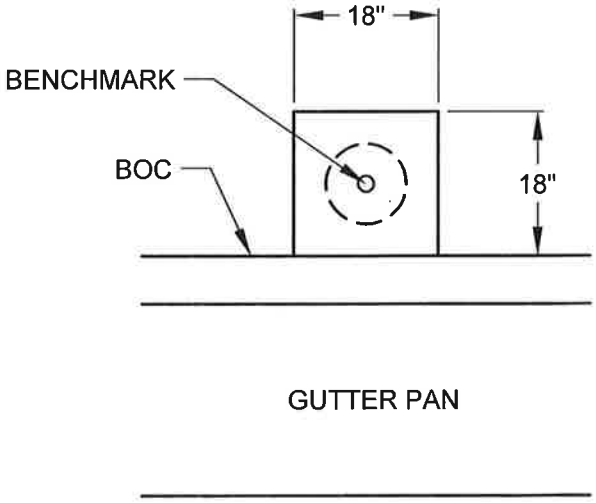

MONUMENT IN PARKWAY DETAIL

NOTES:
1. BENCHMARK TO BE PROVIDED BY THE CITY.
2. BENCHMARK IS TO BE SET FLUSH IN WET CONCRETE.

Dr. LP	No.	Date	Revision	Appr.	Approved By:	STD PLAN
Ch. SN					8/14/17	150
Date 08/17					Lyman Chang, City Engineer, RCE No. 53149 — Date	

CITY OF LODI

PUBLIC WORKS DEPARTMENT

Wastewater Service Cleanout

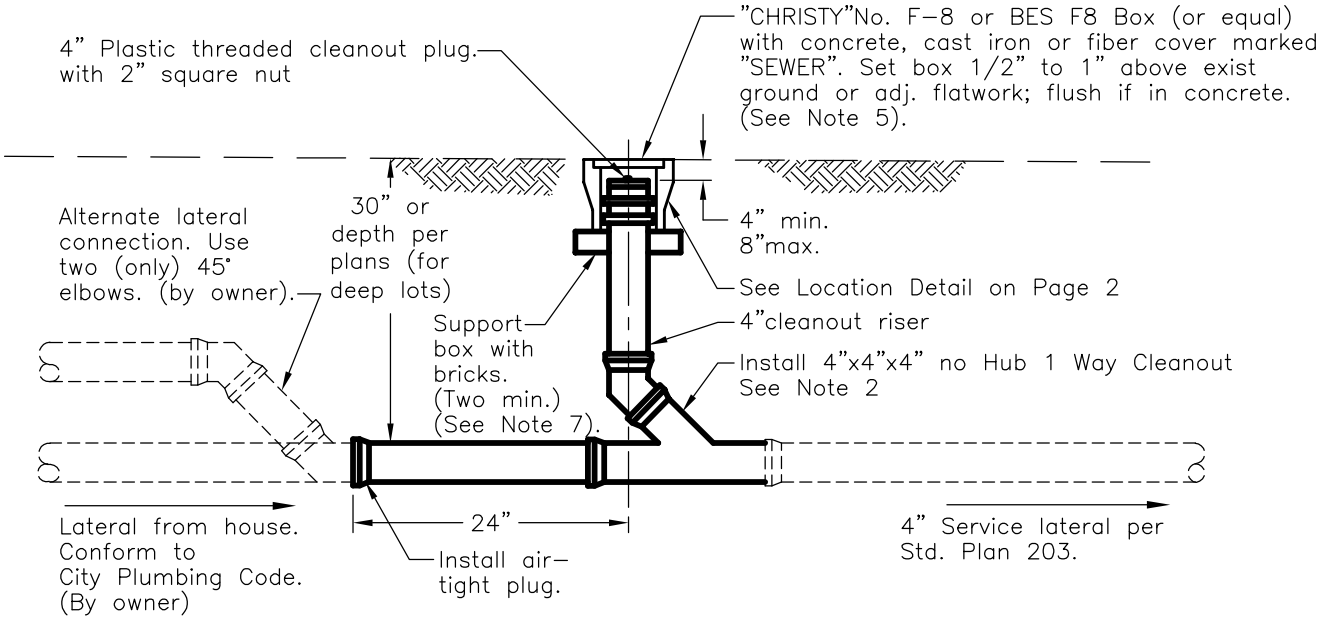

Notes:

1. Install cleanout on all 4" wastewater services unless otherwise specified.
2. 45° Wye & 45° elbow combination shall be Polyvinyl Chloride (PVC) per ASTM D-3034 SDR 35 or Acrylonitrile-Butadiene-Styrene (ABS) per ASTM D-2751, Cast Iron Soil Pipe (ASTM A74, service unit) or Ductile Iron (ASTM A746) or VCP Wye tee ASTM C-425. See Material List Page 2.
3. Backfill shall conform to Std. Plan 501.
4. Maintenance of lateral shall be per City "Wastewater Lateral Maintenance Policy"
5. In commercial driveways. Use "Christy" G-5 box W/G-5C lid or BES equal; in residential driveways replace concrete lid with cast iron lid.
6. When service is installed with water service, terminate even with the water stub.
7. Support box not needed if set in concrete.

Related Plans: 203, 506

Sheet 1 of 2

Dr. KT	No.	Date	Revision	Appr.	Approved By:	STD PLAN
Ch. WS	1	9/03	MOVED C.O. LOCATION		F. Wally Sandelin, City Engineer, R.C.E. 39895 — 9/25/02 Date	201
Date 12/00						

CITY OF LODI

PUBLIC WORKS DEPARTMENT

Wastewater Service Cleanout

LOCATION DETAILS

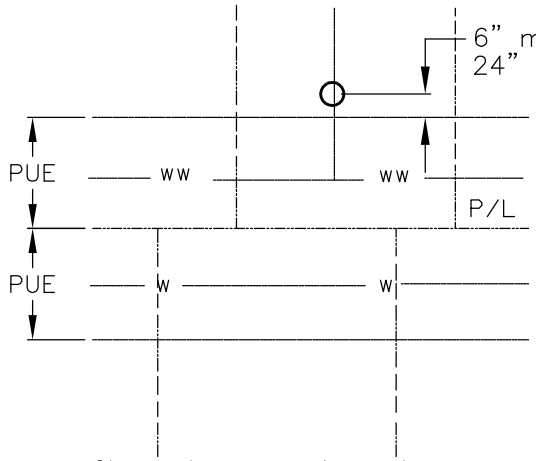

Cleanouts on services at easements installed 6" to 24" outside the easement.

Easement Service

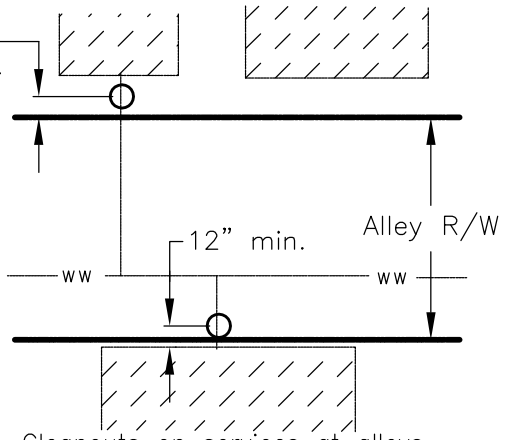

Cleanouts on services at alleys to be installed 6" to 24" outside the alley R/W or 12" within the alley where structures interfere with on-site locations.

Alley Service

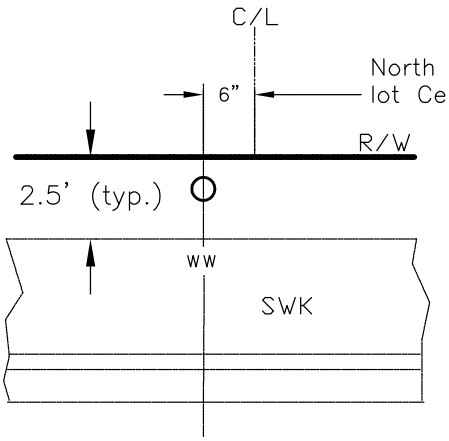

Cleanouts on services at streets to be installed between the R/W & B.O.W.

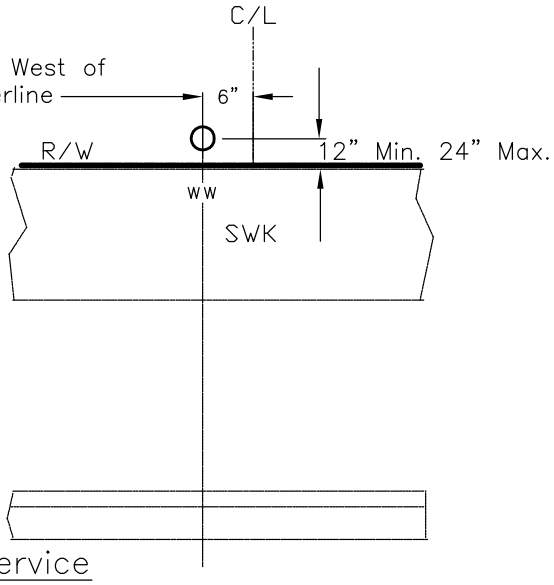

Street Service

Material List for STD PLN 201
City Approved 1-Way Cleanouts (a)

GPK Products Inc.	Solvent Weld SCH 40 DWV
Mueller Industries, Inc.	TY Long Turn

(a) or approved equal

Sheet 2 of 2

Dr. KT	No.	Date	Revision	Appr.
	1	9/03	MOVED C.O. LOCATION	
Ch. WS	2	2/04	REVISED LOT DIMENSION	
Date 12/00				

Approved By: F. Wally Sandelin
F. Wally Sandelin
City Engineer
R.C.E. 39895

2/12/04
Date

STD PLAN
201

CITY OF LODI

PUBLIC WORKS DEPARTMENT

Monitoring Structure

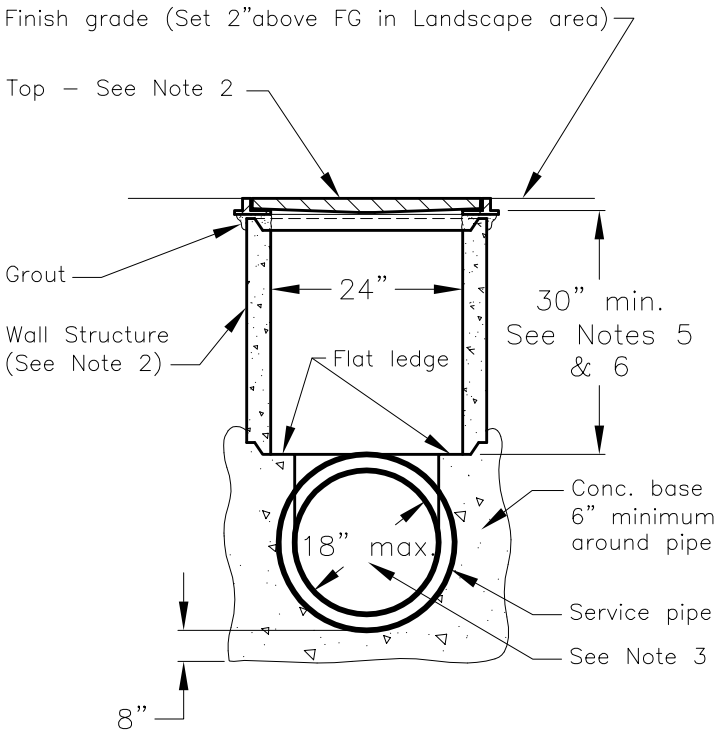

Section

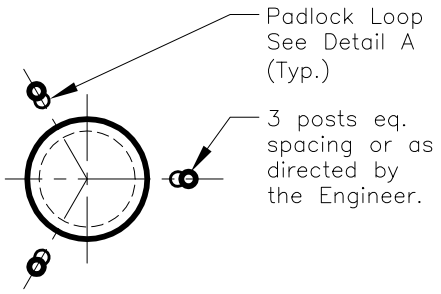

Bollard Location Detail

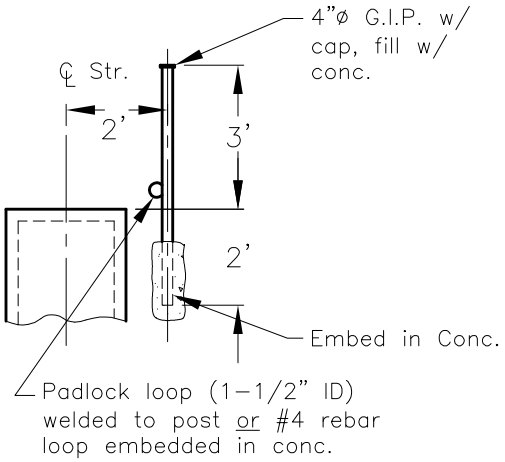

Detail A

Notes:

1. Monitoring structures shall be installed on storm and wastewater services when required by the Engineer or as shown on the plans. Normal location is between the back of sidewalk and the R/W.
2. Construction guidelines:

Location	Wall	Top
Traffic Area	Precast conc. per ASTM C–478 or 6" CIP conc.	Frame & Cover per Std Plan 309
Landscape Area	Precast pipe – VCP, RCP or CP	Expandable Plug

3. For services over 18"ø, consult Engineering Division.
4. Monitoring structure to be privately owned and maintained.
5. Where 30" min. depth cannot be maintain, the structure shall be located behind the sidewalk and be installed with padlock loop per Detail A.
6. Posts required when structure is less than 30" and is located in a traffic area.
7. For trench backfill requirements, See Std. Pln 501.

Dr. KT	No.	Date	Revision	Appr.	Approved By:	STD PLAN
Ch. WS					F. Wally Sandelin 12/28/00	202
Date 12/00					F. Wally Sandelin, City Engineer, R.C.E. 39895 — Date	

CITY OF LODI

PUBLIC WORKS DEPARTMENT

Wastewater Service

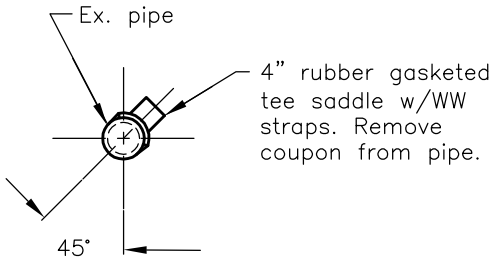

Detail A

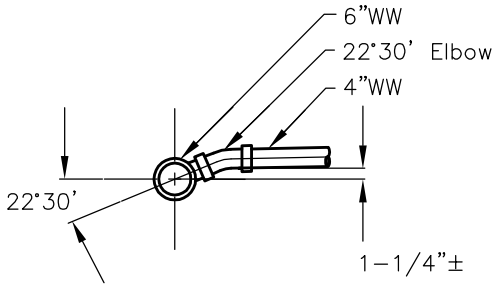

Alt. Detail

(To be used only w/ approval of Engineer on shallow mains)

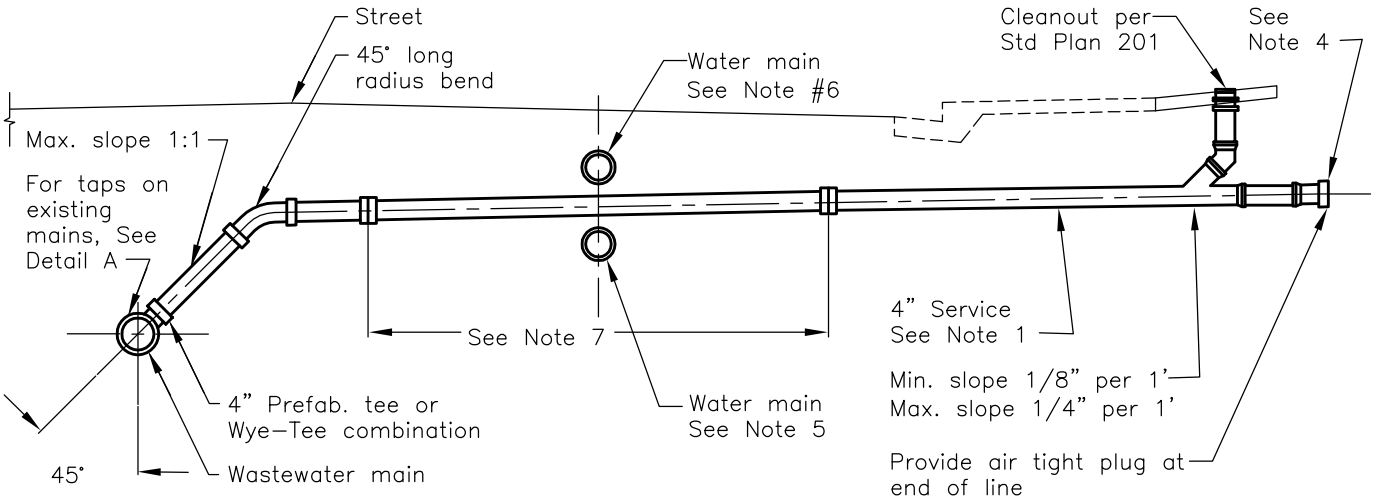

Section

Notes:

1. Pipe shall be Vitrified Clay Pipe per ASTM C-700 with compression joint per ASTM C-425 or compression coupling per ASTM C-594; Polyvinyl Chloride Pipe per ASTM D-3034 SDR 35; or Ductile Iron Class 50 with Compression Joint and Rubber Ring per ASTM D 1869. 6" and larger services per plans and waste water main standards.
2. Backfill shall conform to Std. Plan 501.
3. Taps on existing mains shall be made by the Contractor per Detail A when shown on the plans or approved by the Engineer.
4. When service is installed with water service, terminate even with the water stub.
5. Where service crosses over WM, 4" min. clearance and special construction are required (See Note 7)
6. Where service crosses under WM with less than 12" clearance, 4" clearance and special construction are required. (See Note 7)
7. Special construction: center length of pipe on water main. Short stick clay pipe not allowed. When service constructed under this condition (See Note 1)

Dr. KT	No.	Date	Revision	Appr.	Approved By:	STD PLAN
Ch. WS					F. Wally Sandelin 12/28/00	203
Date 12/00					F. Wally Sandelin, City Engineer, R.C.E. 39895 — Date	

CITY OF LODI
PUBLIC WORKS DEPARTMENT

Wastewater Interceptor

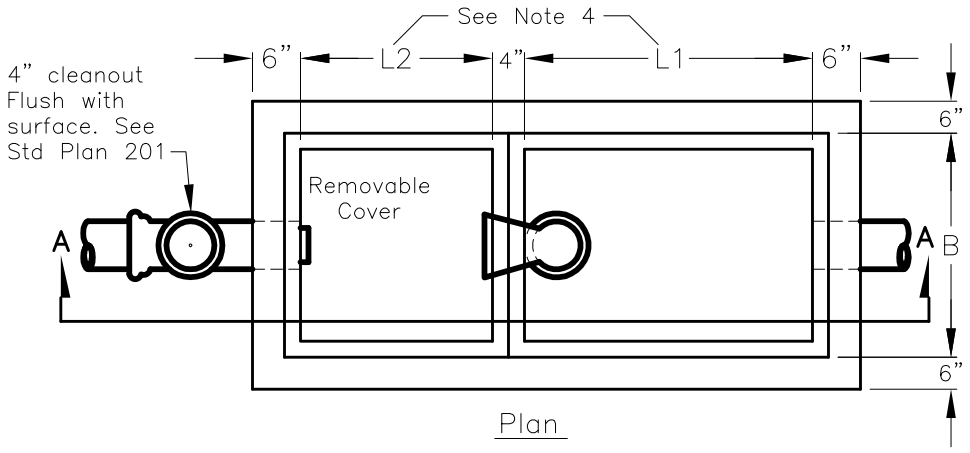

Plan

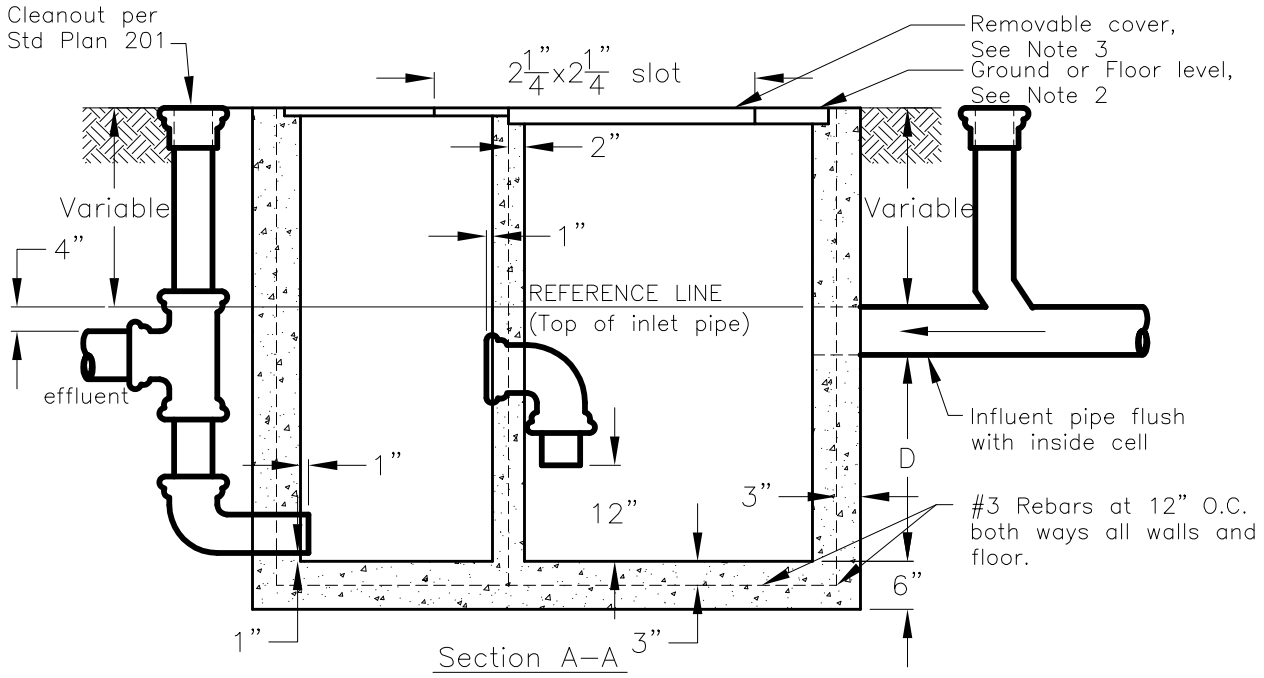

Section A–A

Notes:

1. Precast commercial units are acceptable with prior approval.
2. Waste Interceptor shall not be located in heavy traffic areas. Interceptor shall be installed at ground surface elevation higher than all storm sewer inlet elevations on the property.
3. Removable cover design shall be dictated by strength and location requirements as determined by the installer, but shall be of such a design to provide convenient access to each entire compartment for cleaning. The cover may be sectional, but shall be of solid design, essentially waterproof, installed at or near ground or floor level and kept clear of all obstructions so as to be readily accessible for cleaning and inspection.
4. For flows over 165 gpm the capacity of interceptor required for waste shall be individually determined by Public Works Department.
5. Waste Interceptor to be outside any fencing and subject to inspection at all times.

Sheet 1 of 2

Dr. KT	No.	Date	Revision	Appr.	Approved By:	STD PLAN
Ch. WS					F. Wally Sandelin 12/28/00	204
Date 12/00					F. Wally Sandelin, City Engineer, R.C.E. 39895 — Date	

CITY OF LODI

PUBLIC WORKS DEPARTMENT

Waste Interceptor

Peak flow into interceptor (GPM)	Inches			
	B	D	L1	L2
0–67	24	30	36	24
67–112	30	30	48	30
112–165	36	36	60	36

Over 165 GPM, See Note 4

Note:

Total rated discharge capacity of all fixtures, equipment or appliances discharging into interceptor in accordance with uniform plumbing code or actual flow rate.

Dr. KT	No.	Date	Revision	Appr.	Approved By: F. Wally Sandelin, City Engineer, R.C.E. 39895 — 12/28/00 Date	STD PLAN 204
Ch. WS						
Date 12/00						

CITY OF LODI

PUBLIC WORKS DEPARTMENT

Sand/Oil Trap

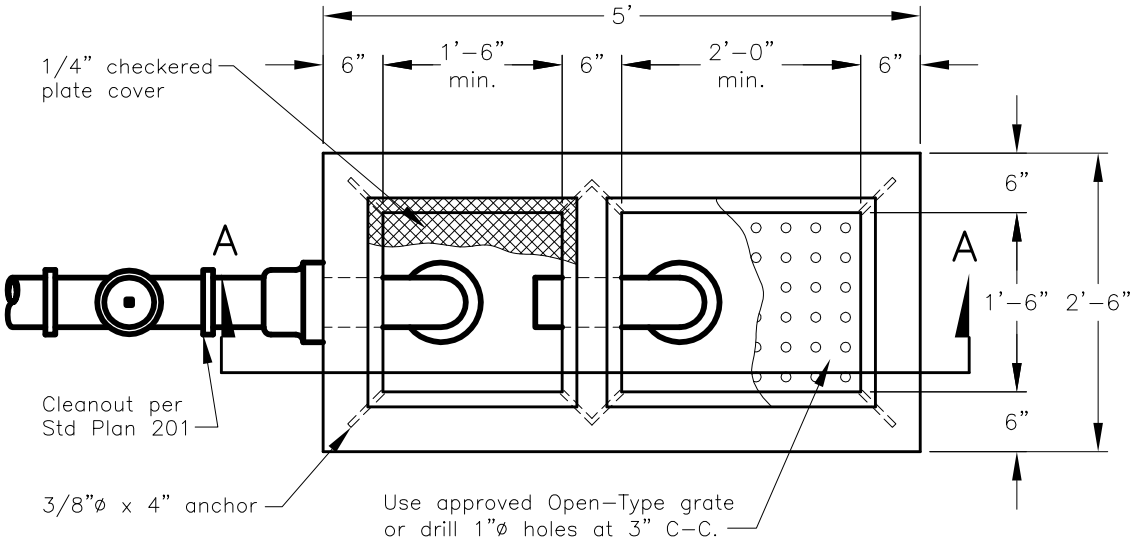

Plan

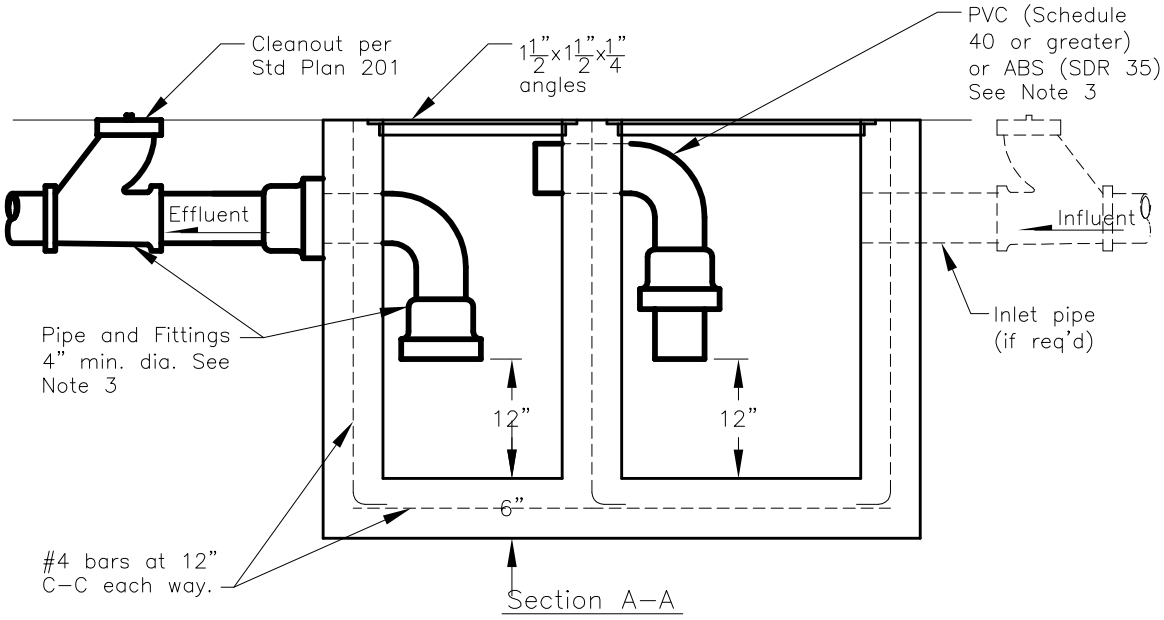

Section A-A

Notes:

1. All exposed steel to be galvanized after fabrication.
2. Precast commercial units are acceptable with prior approval.
3. For petrochemical applications cast iron fittings and piping shall be used.
4. Floor to drain to open grate or drilled plate cover.

Dr. KT	No.	Date	Revision	Appr.	Approved By:	STD PLAN
Ch. WS					F. Wally Sandelin 12/28/00	205
Date 12/00					F. Wally Sandelin, City Engineer, R.C.E. 39895 — Date	

CITY OF LODI

PUBLIC WORKS DEPARTMENT

48" Manhole

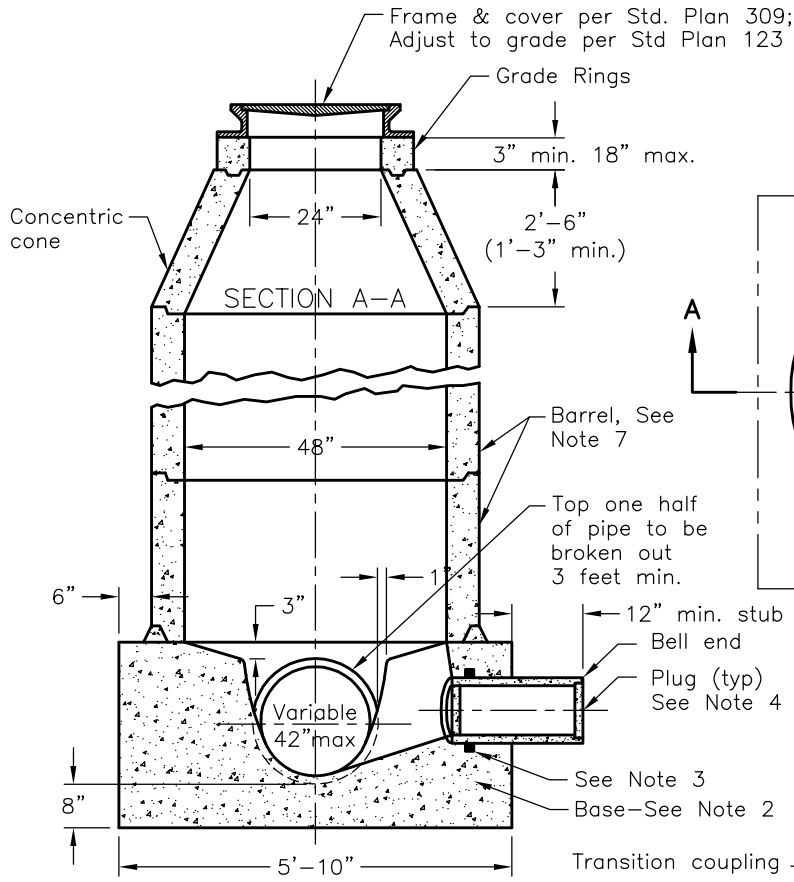

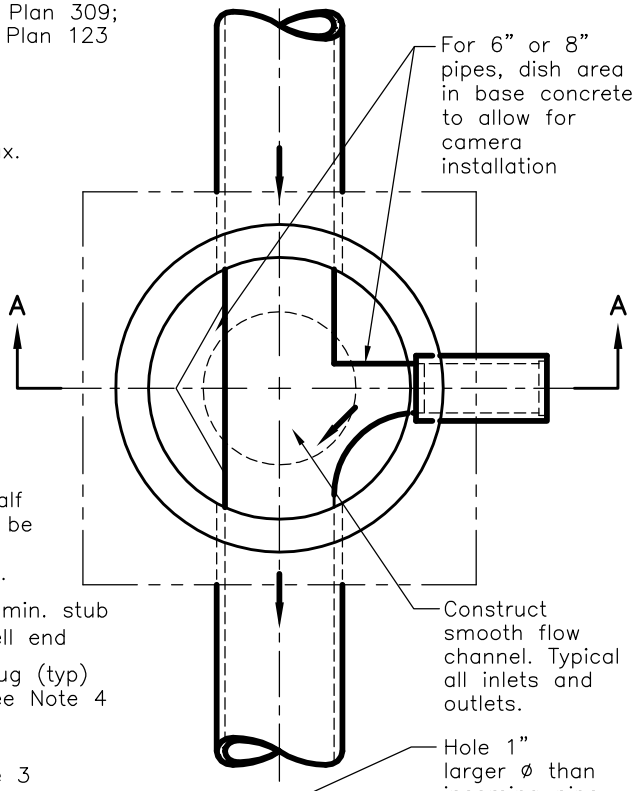

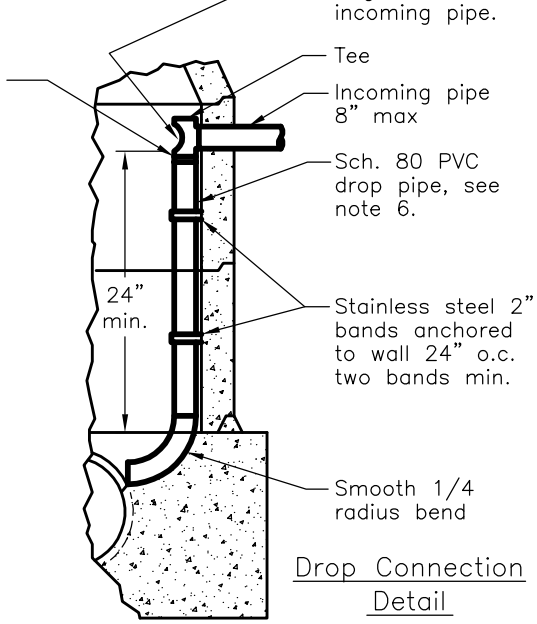

Drop Connection Detail
For Sanitary Sewer only

Notes:

1. Barrel, cone and grade ring sections shall conform to ASTM C478, latest revision. Manufacturer to be approved by the engineer.
2. Base shall consist of cast–in–place Class B concrete per Sec. 90 Caltrans Std Specification. Prefabricated bases shall conform to Note 1 and be placed on 4" of concrete or 3/4" Class II AB Bedding.
3. Rubber ring waterstop or manhole adapter required for PVC pipe installations.
4. Plugs shall be compression type as approved by the Engineer.
5. Backfill around MH shall be compacted to 95% R.C. min.
6. Drop connection to be used only when shown on the plans or approved by the Engineer. Drop pipe to be one size larger than the incoming pipe.
7. All barrel joints shall be grouted inside and outside or sealed Ram–nek or approved equivalent.

Dr. KT	No.	Date	Revision	Appr.
Ch. WS				
Date 12/00				

Approved By: F. Wally Sandelin, City Engineer, R.C.E. 39895 — 12/28/00 Date

STD PLAN 301

CITY OF LODI

PUBLIC WORKS DEPARTMENT

Saddle Manhole

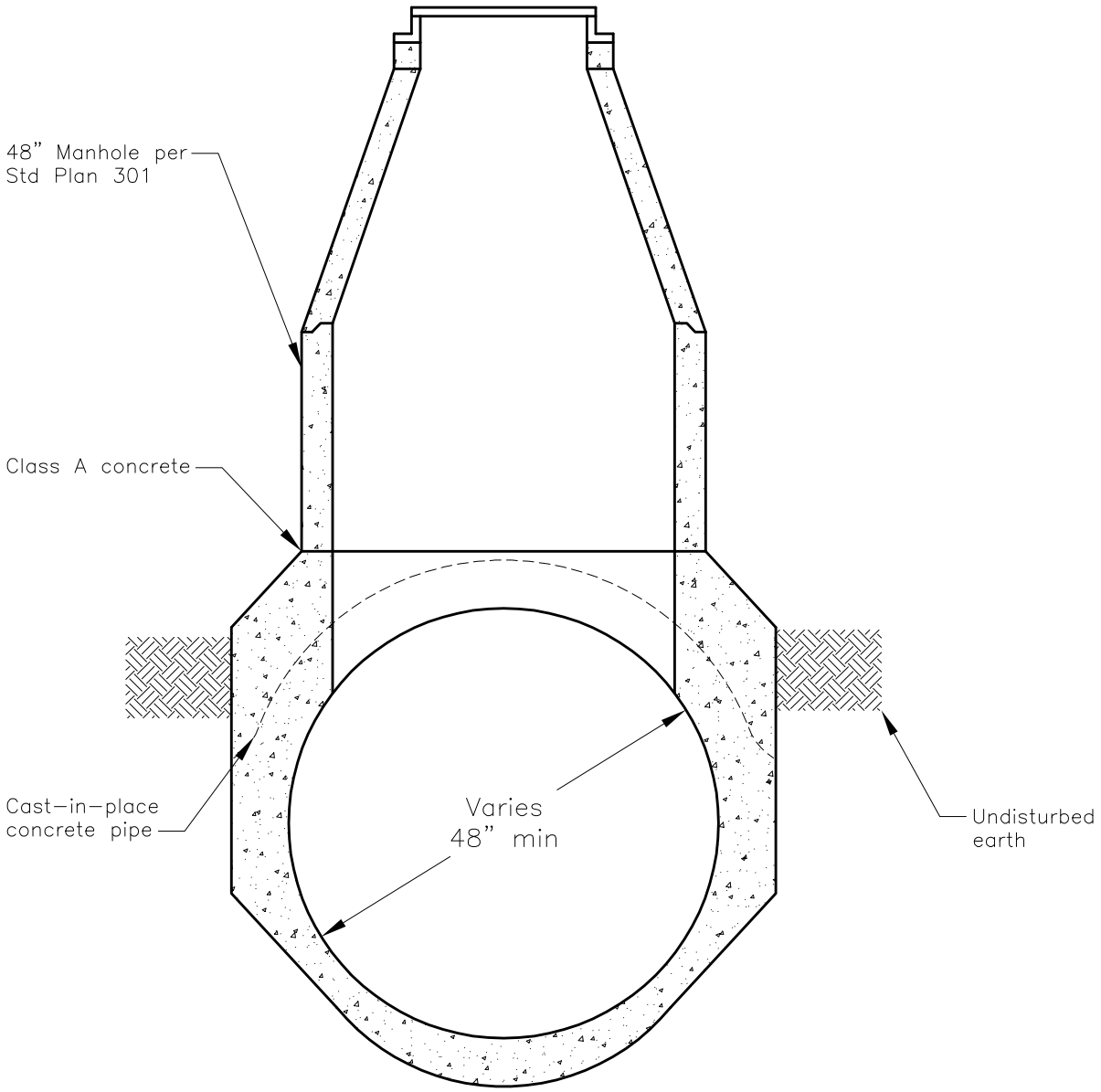

Notes:

1. Make manhole opening in top of pipe before concrete sets and place barrel within following 7 days.
2. Grout all joints.

Dr. KT	No.	Date	Revision	Appr.	Approved By:	STD PLAN
Ch. WS					F. Wally Sandelin 12/28/00 F. Wally Sandelin City Engineer R.C.E. 39895 Date	302
Date 12/00						

CITY OF LODI

PUBLIC WORKS DEPARTMENT

Side Inlet Catch Basin

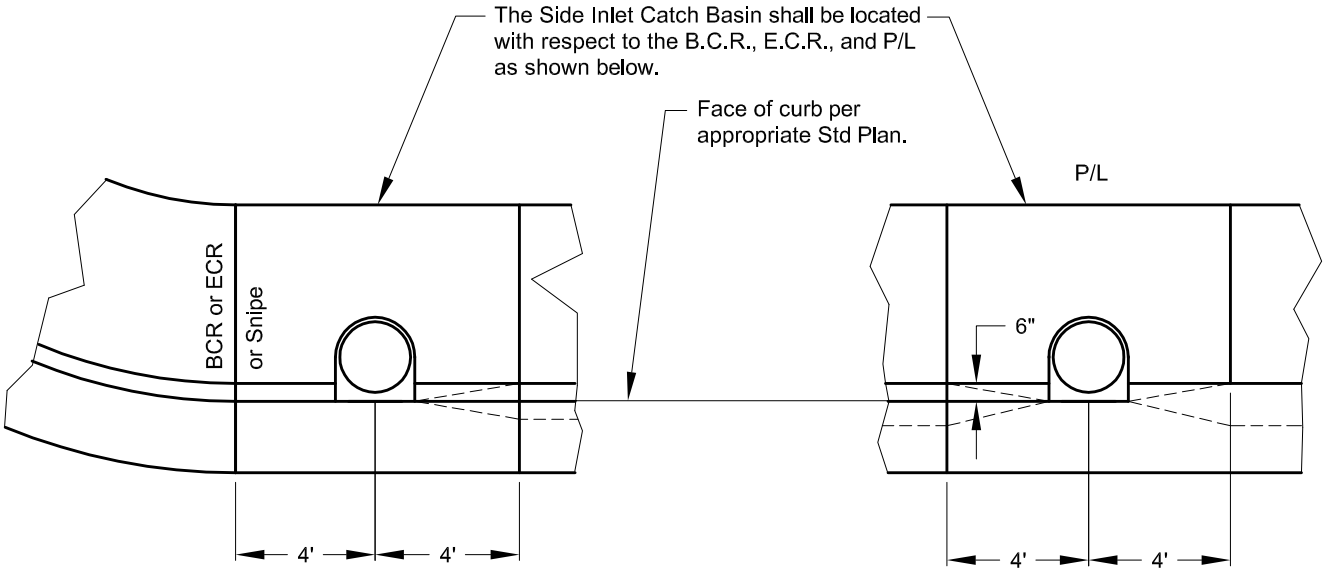

Flowline and curb transition (typ.)

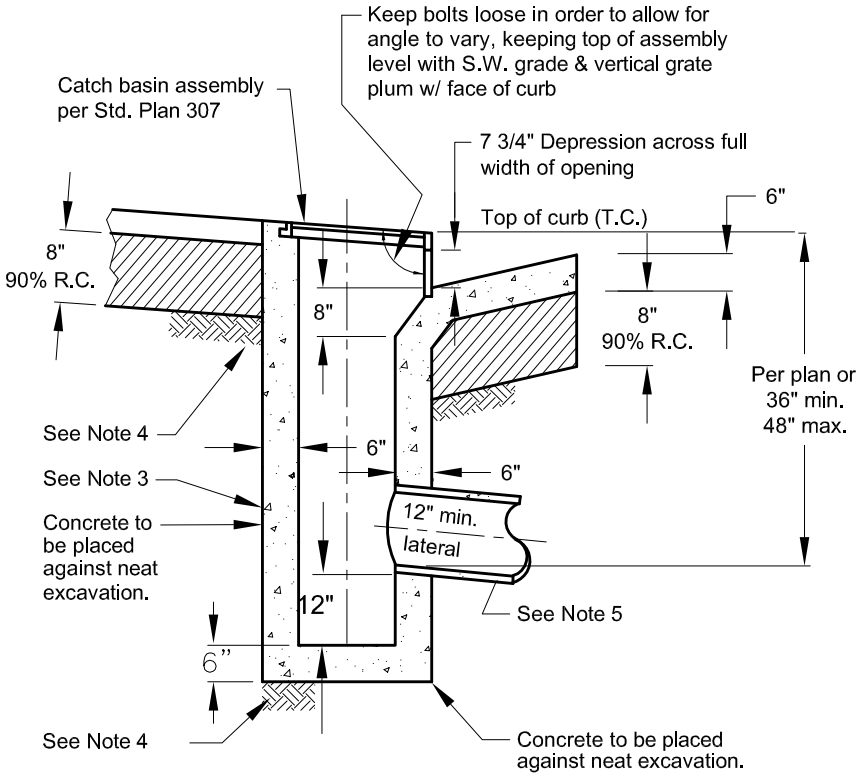

Notes:

1. The concrete shall conform to following criteria.
   A. 2500 P.S.I. at 28 days.
   B. 1 1/2" maximum aggregate.
   C. 4" slump at placing site.
   D. Light broom finish.
   E. Impervious membrane cure.
2. When catch basin is to be constructed with stub, the stub shall extend beyond the toe of the curb & gutter and plugged with precast plug.
3. Barrel may be constructed with 18" R.C.P. and grouted smooth.
4. Recompact over-excavated areas to 92% R.C.
5. Lateral line must be ductile iron pipe when cover is 2' or less.
6. For trench backfill requirements See Std. Pln 501.

Dr. KT	No.	Date	Revision	Appr.
Ch. WS	1	7/01	UPDATE PER FIRST REVISION	
	2	2/04	REVISED SICB OPENING DIM.	
Date 12/00	3	2/05	REVISED TRANSITION DIM.	

Approved By: F. Wally Sandelin, City Engineer, R.C.E. 39895 — 2/2/05 Date

STD PLAN 303

CITY OF LODI

PUBLIC WORKS DEPARTMENT

Drop Inlet Catch Basin

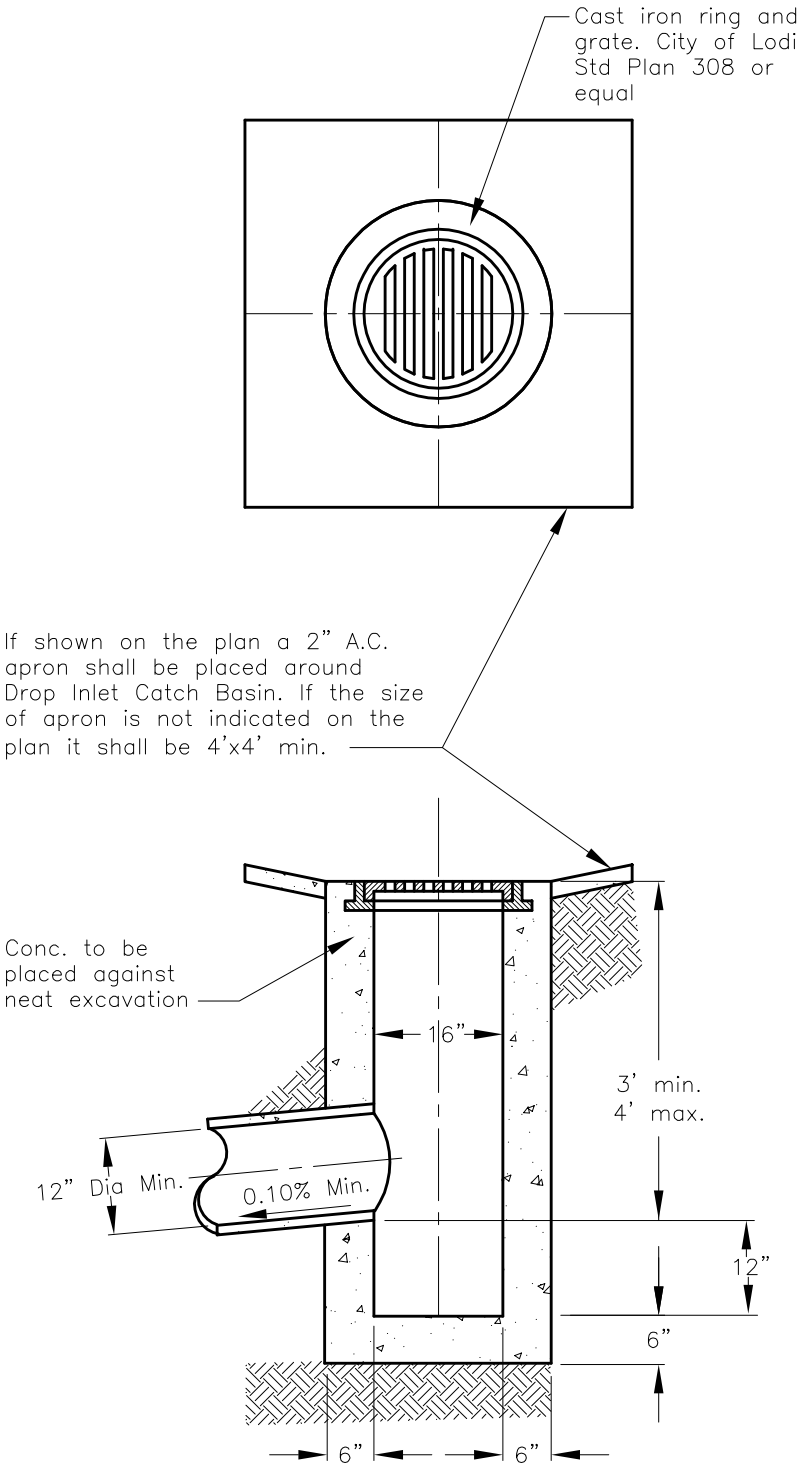

Notes:

1. Conc. 2500 psi at 28 days
   1 1/2" max. agg.
   4" slump at placing site.
   Light broom finish.
   Impervious membrane cure.
2. For trench backfill requirements see Std Plan 501.
3. For 24" catch basin, use Std Plan 310 with slotted cover.
4. Alternate construction—use 18" RCP, grout all openings and voids smooth.

Dr. KT	No.	Date	Revision	Appr.	Approved By:	STD PLAN
Ch. WS					F. Wally Sandelin 12/28/00	304
Date 12/00					F. Wally Sandelin, City Engineer, R.C.E. 39895 — Date	

CITY OF LODI

PUBLIC WORKS DEPARTMENT

SIDE INLET CATCH BASIN ASSEMBLY

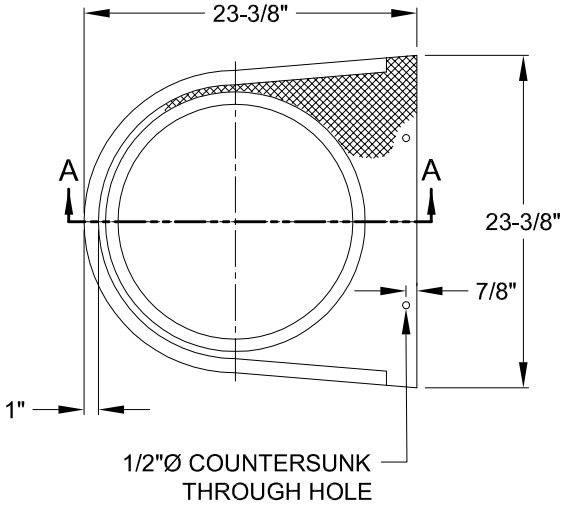

PLAN VIEW FRAME

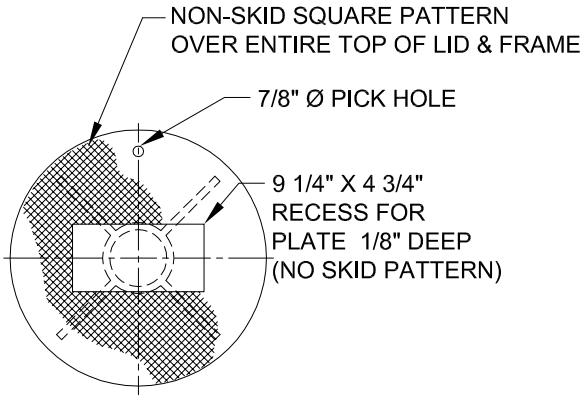

PLAN VIEW LID

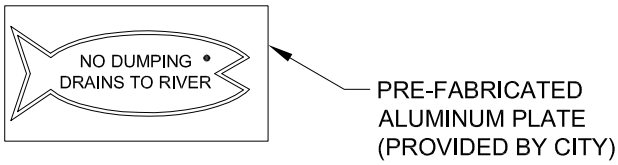

PLATE DETAIL

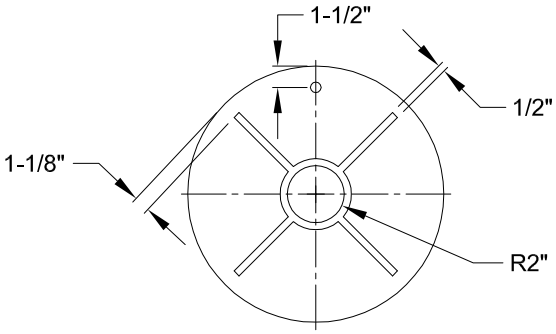

LID UNDERSIDE

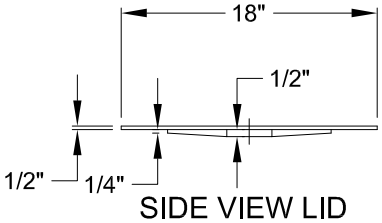

SIDE VIEW LID

INSTALLATION SHALL BE AS PER STANDARD PLAN 303 & 314

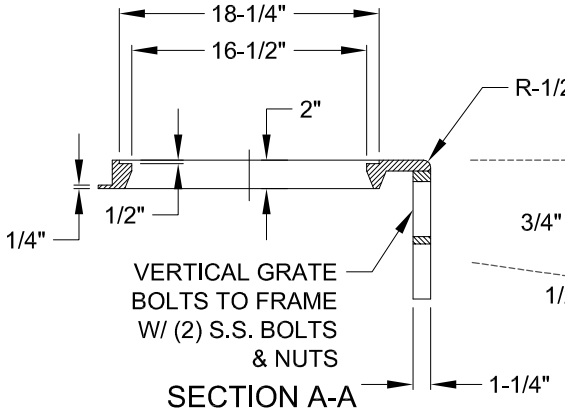

SECTION A-A

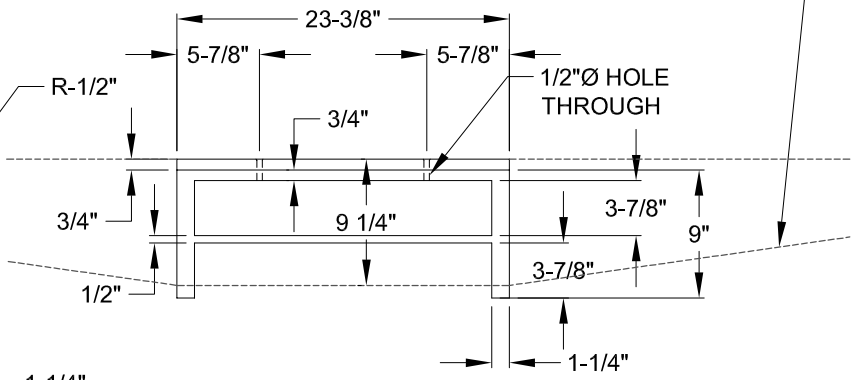

FRONT VIEW

Dr. KG	No.	Date	Revision	Appr.
Ch. WS	1	2/05	NEW STANDARD PLAN	
Date 6-04				

Approved By:

M:\TITLEBLOCKS\Seals&Sigs\Wallysign.tif

F. Wally Sandelin
City Engineer
R.C.E. 39895

2 / 2 / 05
Date

STD PLAN

307

CITY OF LODI

PUBLIC WORKS DEPARTMENT

Drop Inlet Catch Basin Assembly

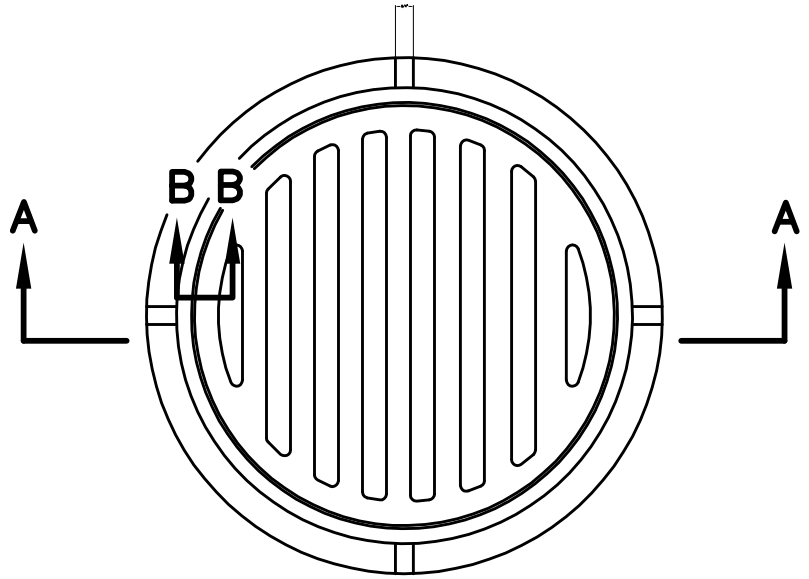

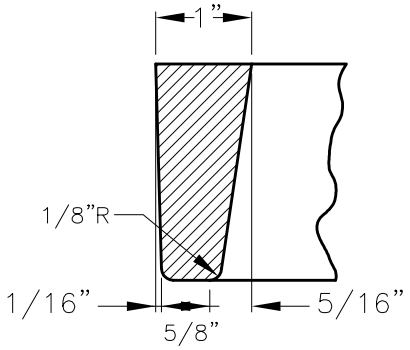

Section B–B

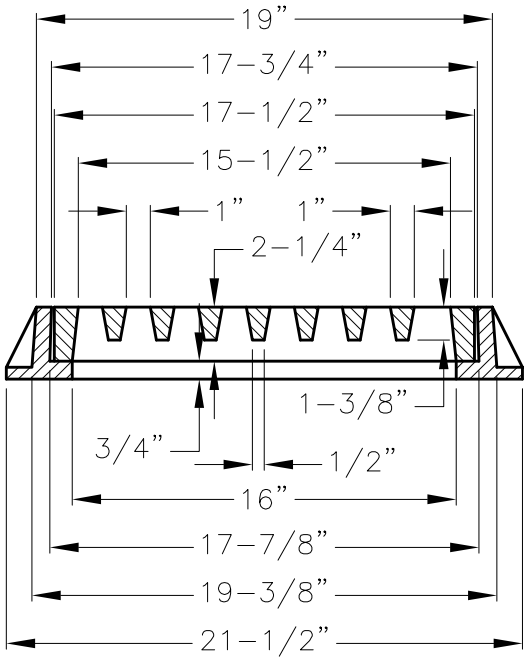

Section A–A

Dr. KT	No.	Date	Revision	Appr.	Approved By:	STD PLAN
Ch. WS					F. Wally Sandelin, City Engineer, R.C.E. 39895 — 12/28/00 Date	308
Date 12/00						

CITY OF LODI

PUBLIC WORKS DEPARTMENT

Manhole Assembly (24")

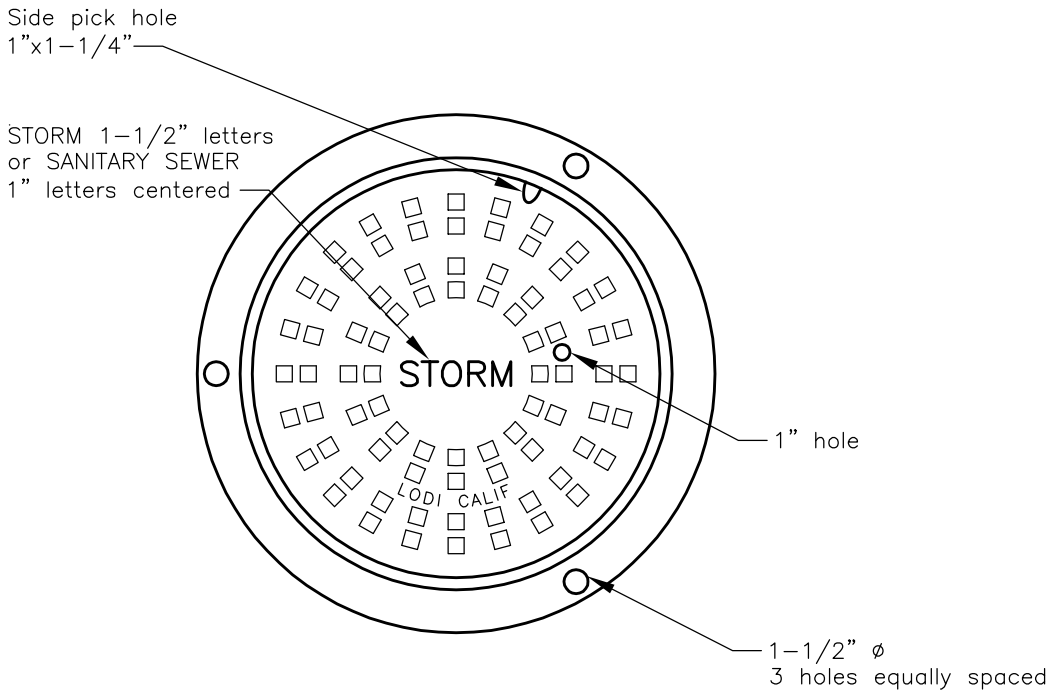

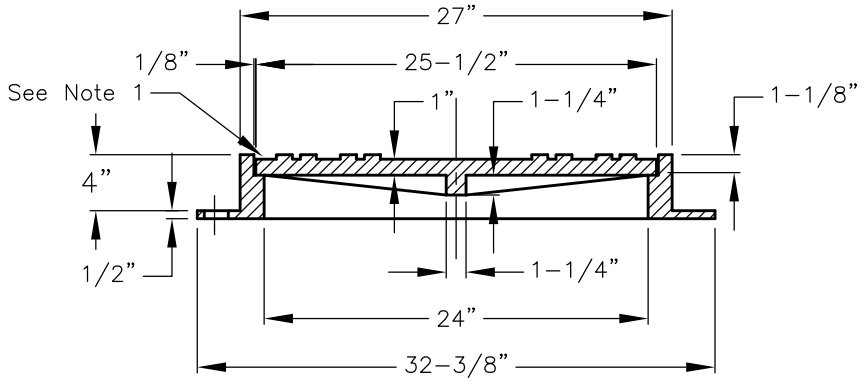

Notes:

1. Frame–Approx. wt. 140 lbs.
2. Cover–Approx. wt. 136 lbs.
3. Manhole cover shall be marked "STORM" or "SANITARY SEWER" as appropriate.
4. Material–Cast Iron per ASTM A-48 Class 30
5. See Std. Plan 123 for adjustment to grade.

Dr. KT	No.	Date	Revision	Appr.	Approved By:	STD PLAN
Ch. WS					F. Wally Sandelin 12/28/00 F. Wally Sandelin City Engineer R.C.E. 39895 Date	309
Date 12/00						

CITY OF LODI

PUBLIC WORKS DEPARTMENT

24" RISER

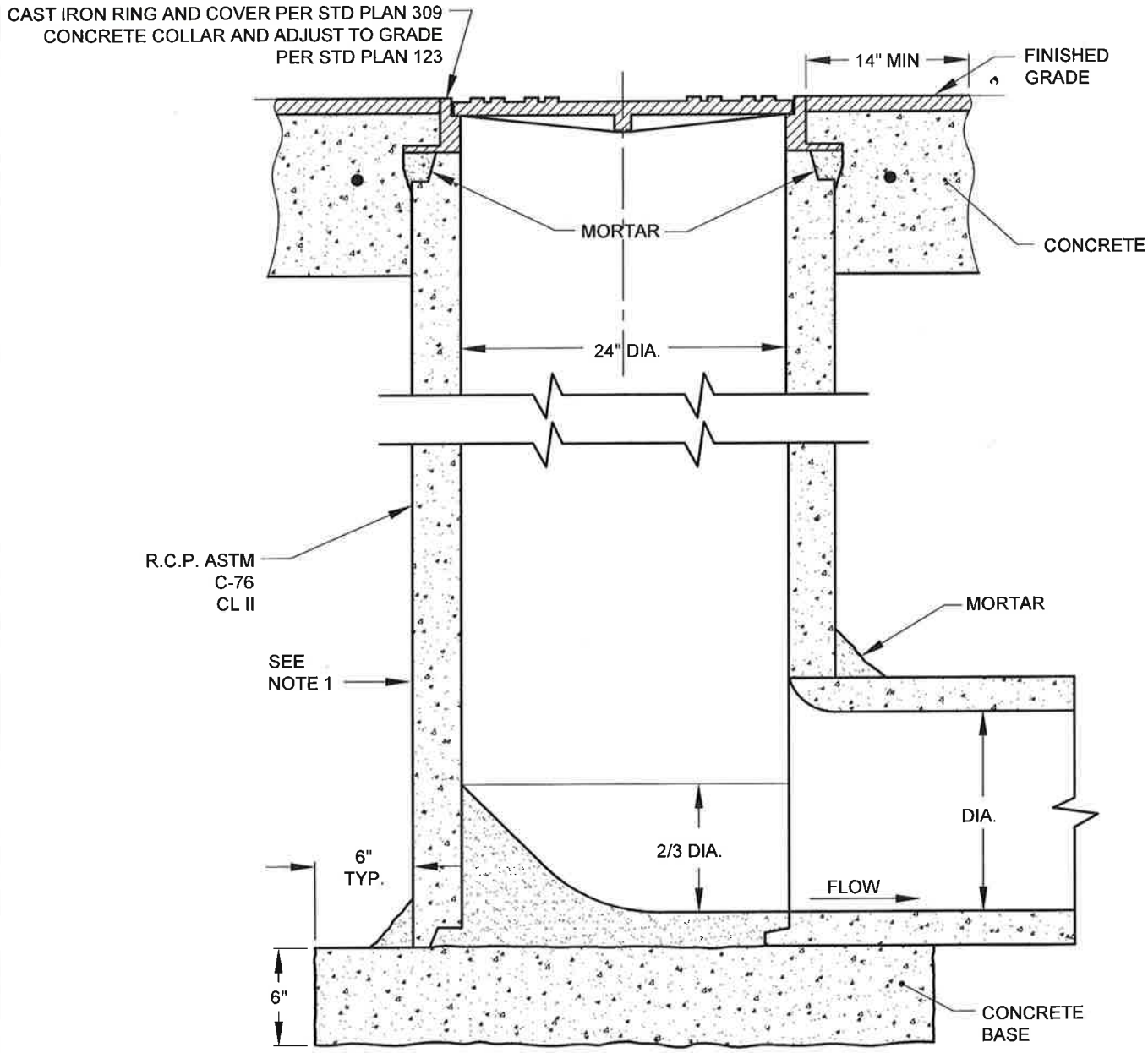

NOTES:

1. BACKFILL AROUND RISER SHALL BE A MINIMUM OF 92% R.C.
2. CONCRETE:
   A. 2500 PSI @ 28 DAYS
   B. 4' SLUMP MAXIMUM.
   C. CLASS B PER SECTION 90 OF STANDARD SPECIFICATIONS. 1-1/2" MAX. AGG.
3. FOR DEPTH OVER 60", USE 48" MANHOLE, STANDARD PLAN 301.
4. FOR TRENCH BACKFILL REQUIREMENTS, SEE STANDARD PLAN 501.

Dr. KT	No.	Date	Revision	Appr.	Approved By:	STD PLAN
Ch. WS	1	6/17	ADDED CONCRETE COLLAR		Lyman Chang, City Engineer, RCE No. 53149 — Date 7/18/17	310
Date 12/00						

CITY OF LODI

PUBLIC WORKS DEPARTMENT

Construction Catch Basin Filter

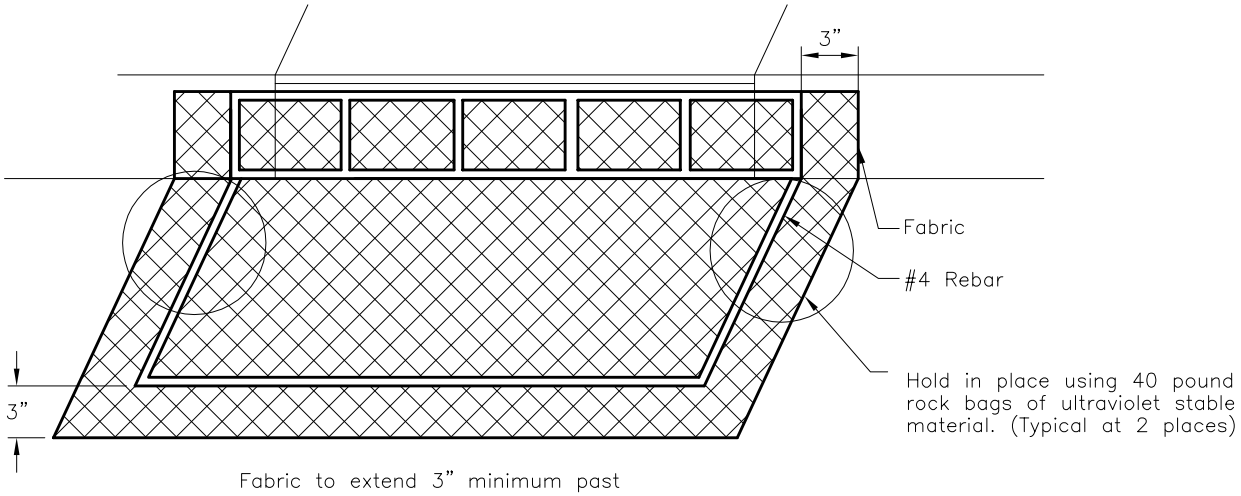

Fabric to extend 3" minimum past bar on front & sides.

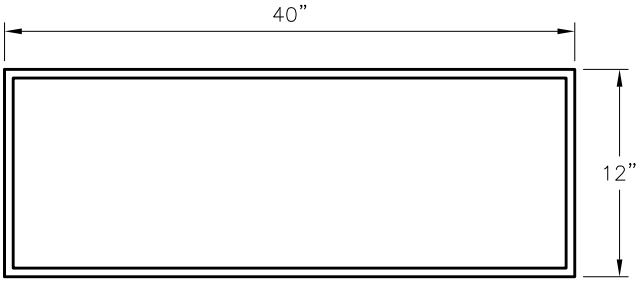

Top

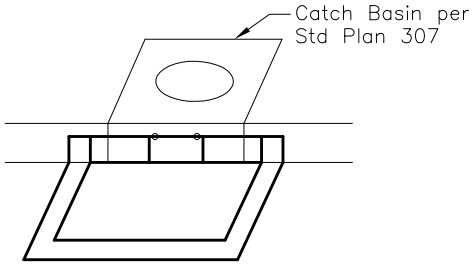

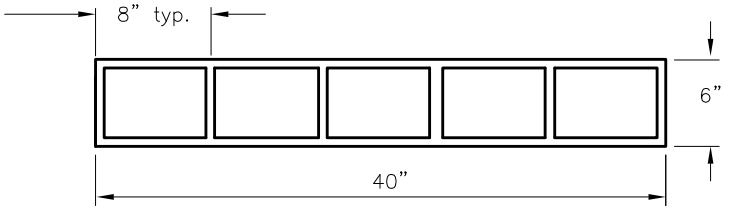

Front

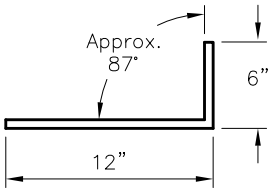

Side

Notes:

1. Will be maintained weekly and/ or after every storm.

Dr. KT	No.	Date	Revision	Appr.	Approved By:	STD PLAN
Ch. WS					F. Wally Sandelin 12/28/00	313
Date 12/00					F. Wally Sandelin, City Engineer, R.C.E. 39895 — Date	

CITY OF LODI

PUBLIC WORKS DEPARTMENT

Gutter Transition Detail

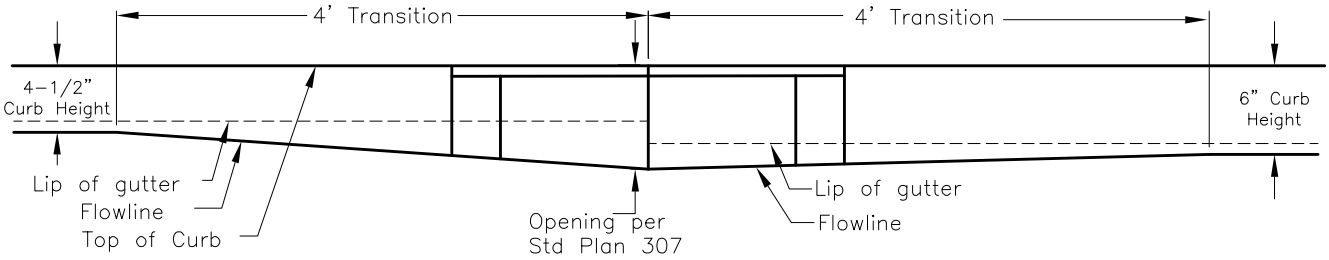

Left side for 4-1/2" Curb Height

Gutter Transition Detail

Right side for 6" Curb Height

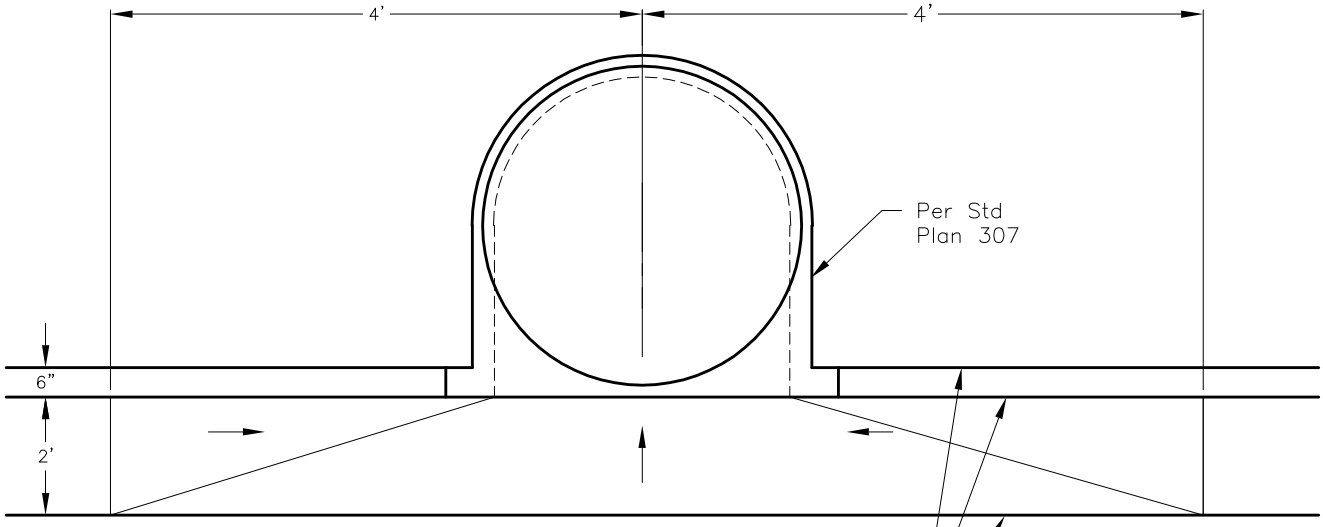

Plan View

Back of Curb
Face of Curb
Lip of Gutter

Dr. KT	No.	Date	Revision	Appr.	Approved By:	STD PLAN
Ch. WS					F. Wally Sandelin, City Engineer, R.C.E. 39895 — 12/28/00 Date	314
Date 12/00						

CITY OF LODI

PUBLIC WORKS DEPARTMENT

Sand/Oil Trap

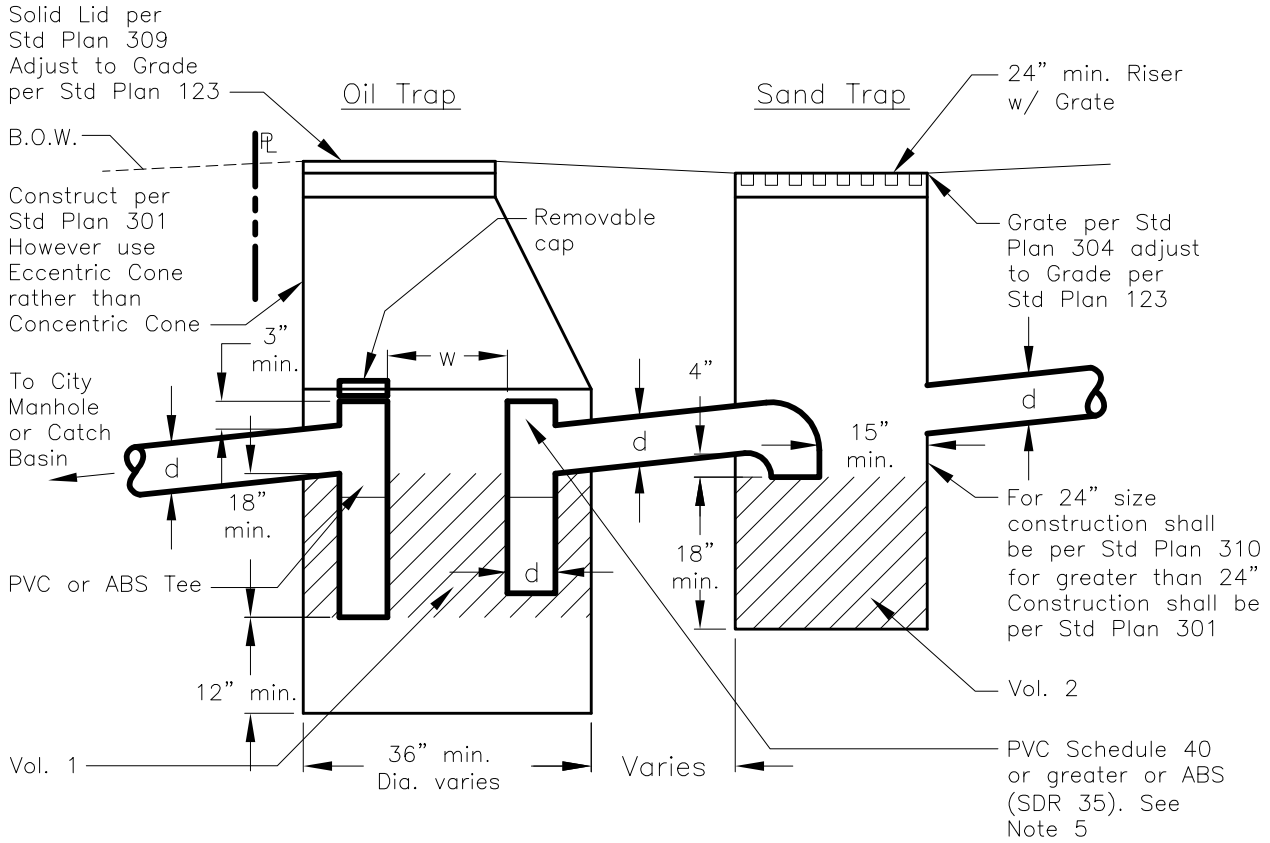

Drainage Area (s.f.) (Excluding Landscaping)	Vol. 1 cu. ft.	d	w	Vol. 2 Combined all C.B.'S cu.ft.
0 – 20,000	3	6"	12"	Drainage Area ÷ 4000
20,000 – 40,000	6	8"	16"	
40,000 – 100,000	10	10"	20"	
100,000 – 220,000	12	12"	24"	

Notes:

1. Precast commercial units are acceptable with prior approval.
2. Oil Trap to be outside of fencing and subject to inspection at all times.
3. Larger sizes may be required based on generation of oil and/ or sand (i.e. Bulk oil facilities, Trucking firms)
4. For lower flows Standard Plan 205 can be used with City approval.
5. For petrochemical applications Cast Iron fittings and piping will be used.

Dr. KT	No.	Date	Revision	Appr.	Approved By:	STD PLAN
Ch. WS	1	2/04	ADDED REMOVABLE CAP		F. Wally Sandelin, City Engineer, R.C.E. 39895 — 2/12/04 Date	315
Date 12/00						

CITY OF LODI

PUBLIC WORKS DEPARTMENT

Fire Hydrant Installation

Note: Where main is over 150' from hydrant a second valve shall be installed in-line in the vicinity of the hydrant (15'-30') Refer to water valve installation Standard Plan 402.

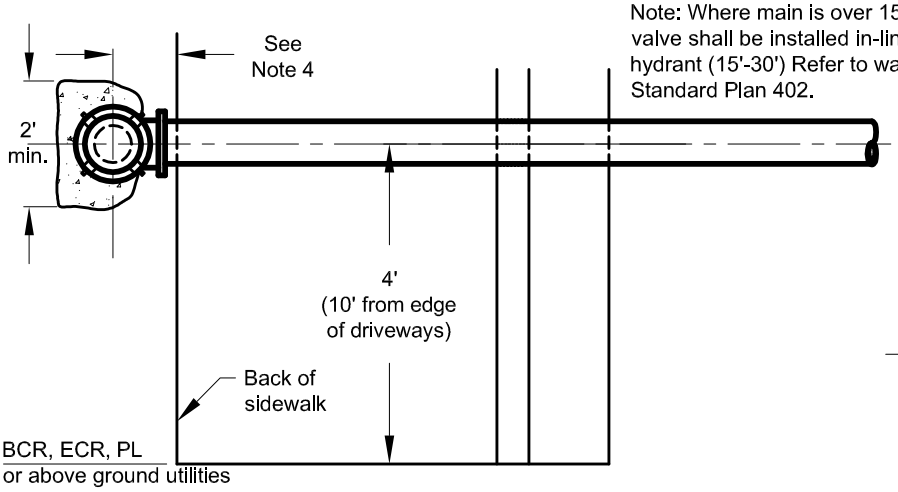

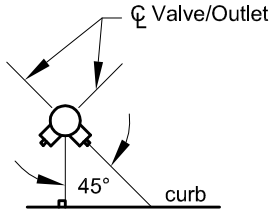

Hydrant Orientation

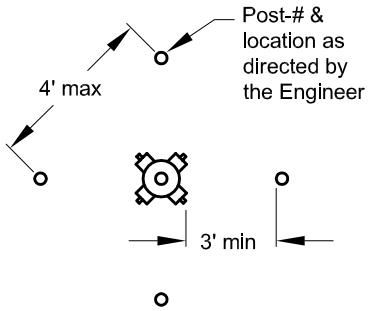

Guard Post Location Detail

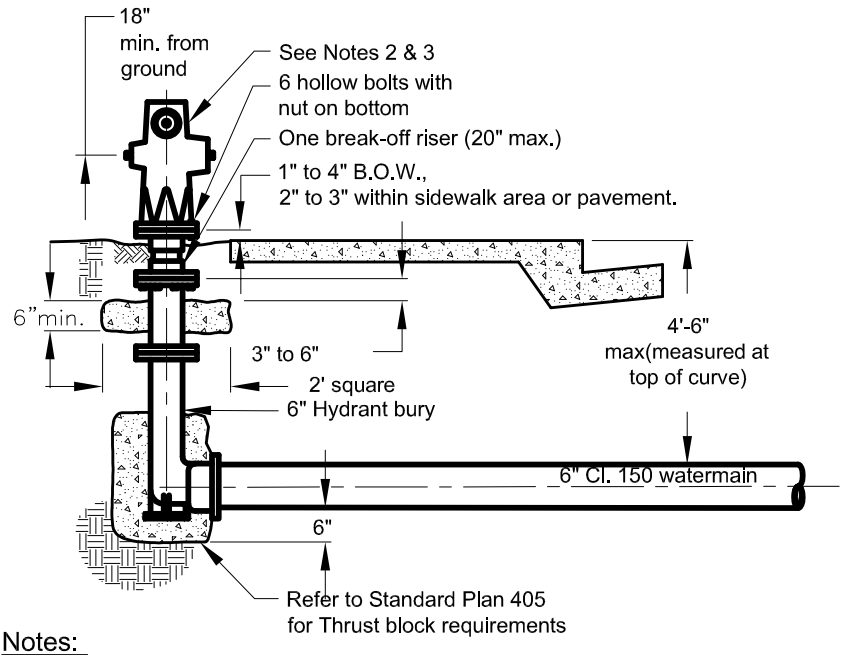

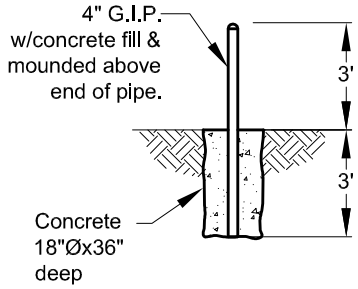

Guard Post Construction Detail

See Note #5

Notes:

1. All work and material shall conform to City of Lodi Construction Specifications.
2. Hydrants shall be painted Federal Yellow at the factory and furnished with National Standard Hose Thread outlets and cast iron caps.
3. All Hydrants 1 4-1/2" outlet & 1 2-1/2" outlet; with fusion epoxy coated interior. Clow 850; Clow 950; AVK 24/70; Jones 4040.
4. Locate C/L of hydrant per the following:
   1.5' behind walk where F.O.C. to B.O.W. distance is 7.0' or less.
   2.5' behind F.O.C. where F.O.C. to B.O.W. distance is greater than 7.0'
   5' behind F.O.C. in planters.
5. Install guard posts where hydrants are installed in paved areas accessible to traffic or in planters where hydrant is less than 3' behind the curb or when directed by the City.
6. For trench backfill requirement, See Standard Plan 501.
7. Install blue retroreflective hydrant pavement marker per std. plan 716.

Dr. JP	No.	Date	Revision	Appr.
Ch. LC	1	9/03	ADJUSTED DIMENSION FROM PL	
Date 1/14	2	2/04	REVISED AVK MODEL NUMBER	
	3	2/05	ADDED NOTE 7	
	4	2/08	ADJUSTED GUARD POST DEPTH	

Approved By:

1/14/14

Charlie Swimley — Date

City Engineer / Deputy Public Works Director

RCE No. 52842

STD PLAN

401

CITY OF LODI

PUBLIC WORKS DEPARTMENT

Water Valve Installation

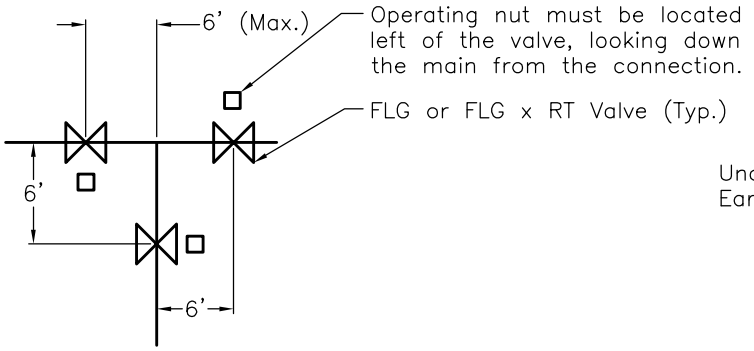

Flanged Installation
Detail B

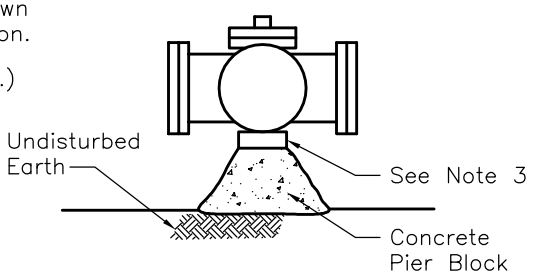

Hot Tap Valve Support
Detail C

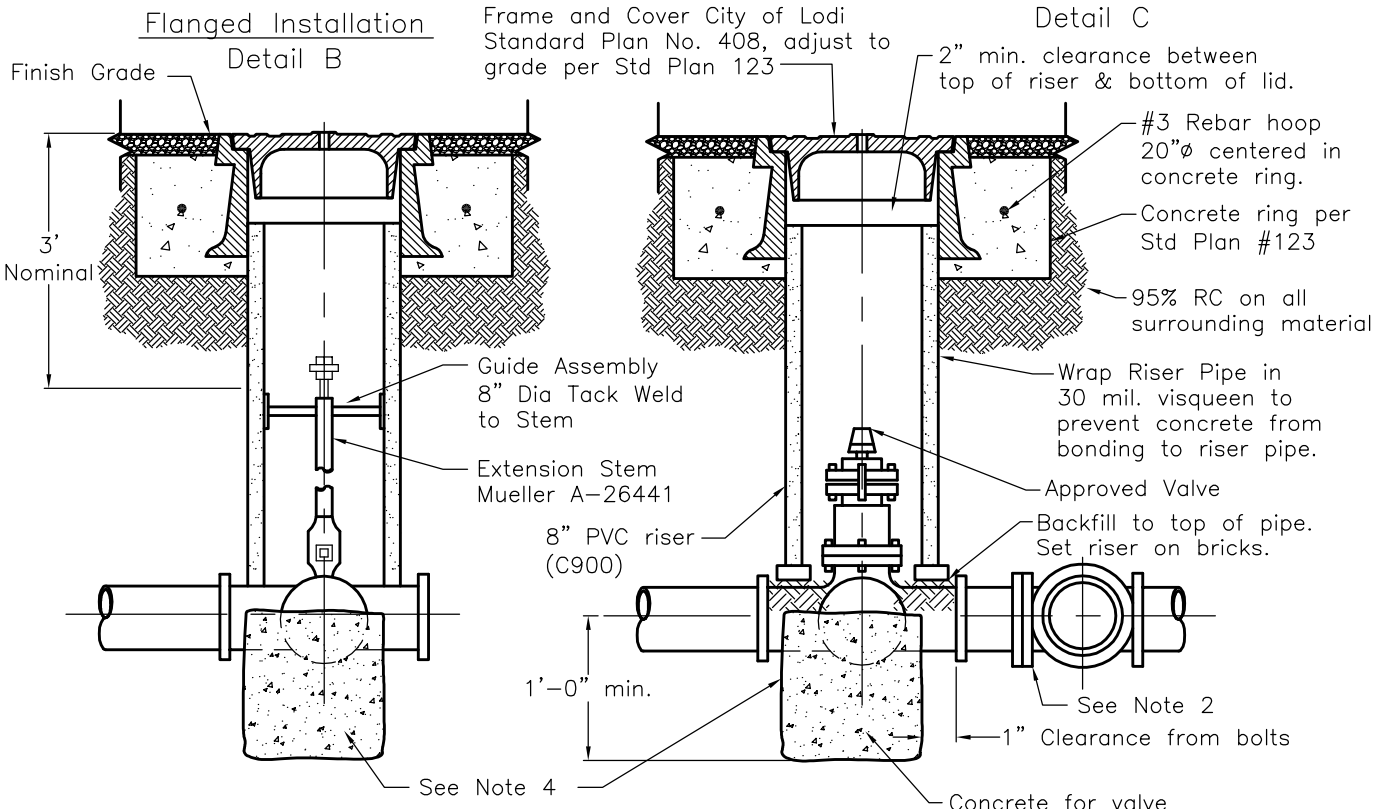

Extension Stem Detail A
See Note 1

Notes:

1. Install extension stem when distance from valve cover to operating nut is greater than 12 feet; 3' max. nominal cover per Detail A.
2. Flanged fittings shall be used where lines are to be extended at a later date or as shown on the improvement plans. Operating nuts on flanged valves must be arranged per Detail B.
3. Concrete blocks may be used for valve and riser support; thrust blocks per Standard Plan 405. For Hot Tap Valve support refer to Detail C.
4. Place Visqueen around valves before placement of concrete supports.
5. For trench backfill, see Standard Plan 501.

Dr. KT	No.	Date	Revision	Appr.	Approved By:	STD PLAN
Ch. WS					F. Wally Sandelin, City Engineer, R.C.E. 39895 — 5/28/08 Date	402
Date 7/08						

CITY OF LODI

PUBLIC WORKS DEPARTMENT

Water Valve Installation Materials List

All Water Valves & Materials shall be Class 150B with 2" square operating nuts, open left (clockwise to close) and shall conform to AWWA Standard C–504 for Rubber Seated Butterfly Valves and City of Lodi Construction Specs 6–7602.

AWWA Approved Valves:

- Mueller RS and Butterfly
- M+H/Clow/Kennedy RS and Butterfly
- American Darling RS Gate valves
- Waterous RS Gate valve
- AVK RS Gate valves

Dr. KT	No.	Date	Revision	Appr.	Approved By:	STD PLAN
Ch. WS					F. Wally Sandelin 12/28/00 F. Wally Sandelin City Engineer R.C.E. 39895 Date	402
Date 12/00						

CITY OF LODI

PUBLIC WORKS DEPARTMENT

1" WATER SERVICE FOR 3/4" OR 1" METER W/ RADIO READ

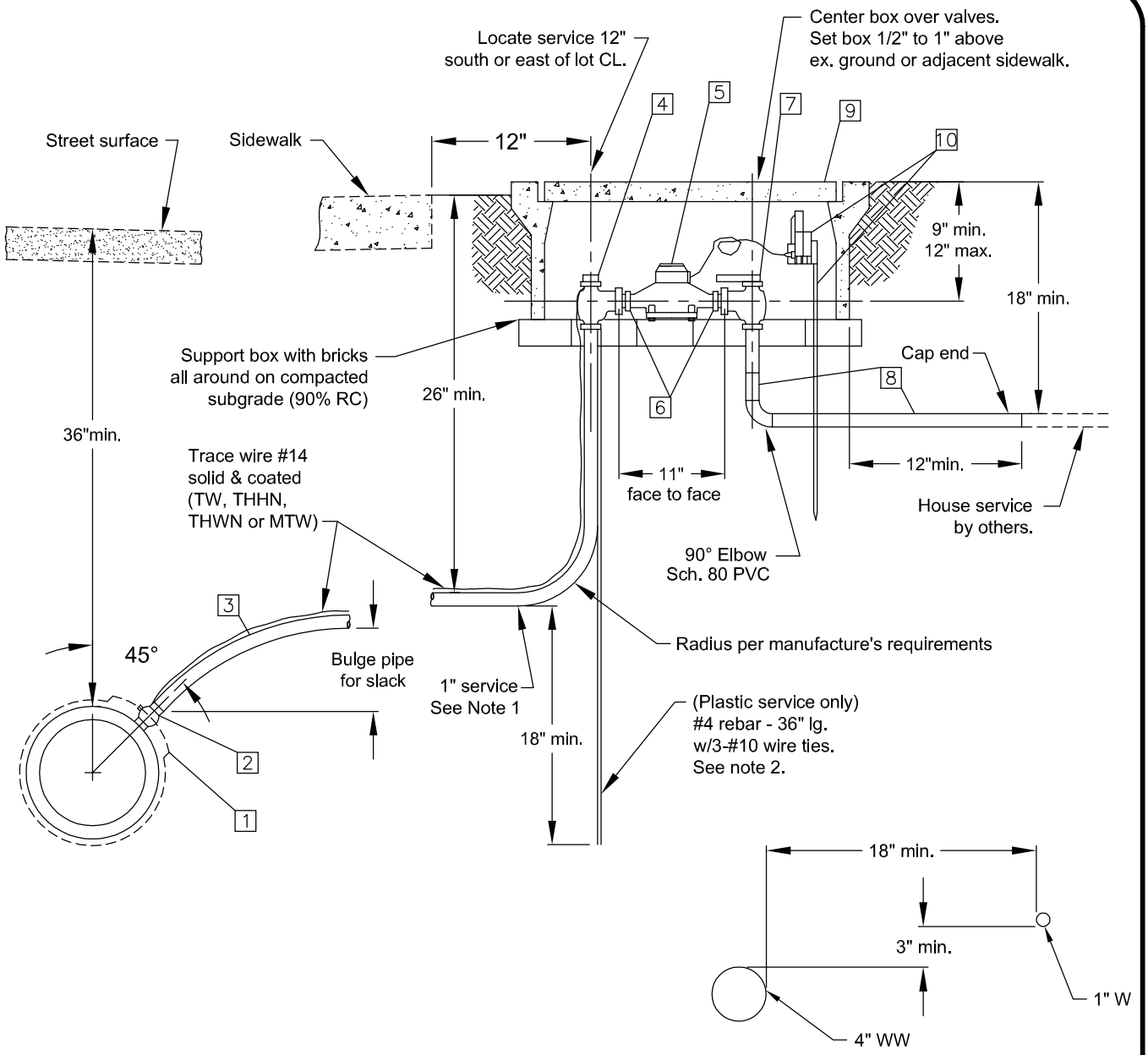

Trench Section

Notes:

1. Maintain 24" clearance between tap and any coupling, fitting or adjacent tap. Plastic services shall be looped approximately 6" vertically or laterally to provide slack in the line. If the service is installed in the same trench as the sanitary service, the water service shall be installed without splices and the trench section shown applies.
2. Backfill shall conform to Std. Plan 501.
3. All fittings shall comply with California No-Lead brass requirements.

Sheet 1 of 3

Dr.	No.	Date	Revision	Appr.
	3	10/05	ADDED METER & ERT	
Ch.	4	7/09	CHANGED CUSTOMER VALVE	
	5	3/10	REVISED PER AB 1953 REQ'S.	
Date	6	4/11	REVISED ERT MOUNTING.	

Approved By:

F. Wally Sandelin
City Engineer
R.C.E. 39895

4/12/11
Date

STD PLAN

403

CITY OF LODI

PUBLIC WORKS DEPARTMENT

1" WATER SERVICE FOR 3/4" OR 1" METER MATERIAL LIST

Fitting (a.)	Size	Basic Feature	Inlet Connection	Outlet Connection	Manufacturer's Nos.
Saddles 1	1"	For C1-AC & Ductile Iron Pipe Ductile Iron Double Strap Saddle No Single Strap Saddles		IPT	A.Y. McDonald 4826A Smith Blair 313 Romac 202 Other manufacturers with similar designs o.k.
Saddles	1"	For C900 Pipe		IPT	A.Y. McDonald 4836A Romac 101S Mueller H1349
Corp. Stop 2	1"	Plug Style	MIP	Comp	A.Y. McDonald 74704B-22 CTS Or Approved Equal
Service Pipe 3	1"	Tubing			C.T.S. PE 3408 CL 160 with Tracer Wire
Angle Stop 4	1"	Full Port Angle Ball Valve	1" PE	Meter Swivel Nut	A.Y. McDonald 74602B-22 CTS Or Approved Equal
Meter 5	3/4"	Bronze 9" Long w/ Rubber Washer	IPT	IPT	Badger Model 35 Sensus Model SR II-EB Hersey Model 442
Meter 5	1"	Bronze 10 3/4" Long w/ Rubber Washer	IPT	IPT	Badger Model 55 Sensus Model SR II-EB Hersey Model 452
Meter Adaptor 6	3/4" X 1"	Bronze Meter Adaptor	MIPT	FIPT	A.Y. McDonald 710J34 Or Approved Equal
Angle Stop 7	1"	Full Port Angle Ball Valve	1" FIPT	Meter Swivel Nut	A.Y. McDonald 74604B With Handle # 6120B Or Approved Equal
Customer Pipe 8	1"	PVC Sch. 80 Pipe			IPS PVC Sch. 80 per Uniform Plumbing Code

Dr.	No.	Date	Revision	Appr.
Ch. WS	2	2/05	REVISED PAGE 1	
	3	10/05	ADDED METER & ERT	
Date	4	7/09	CHANGED CUSTOMER VALVE	
	5	3/10	REVISED PER AB 1953 REQ'S.	

Approved By: F. Wally Sandelin, City Engineer, R.C.E. 39895 — 10/14/10 Date

STD PLAN 403

CITY OF LODI

PUBLIC WORKS DEPARTMENT

1" WATER SERVICE FOR 3/4" OR 1" METER MATERIALS LIST

Fitting (a)	Size	Basic Feature	Inlet Connection	Outlet Connection	Manufacturer's Nos.
Service Box (b) 9	N/A	All lids to read Water	N/A	N/A	Christy FL30 Box 12 (Backyard service easements, rod mounted) Christy FL30D lid (Backyard service easements, rod mounted) Christy N16 Box (All installs unless otherwise approved) Christy FL16D lid (Grass Areas,Flush Fit Driveways, Sidewalks, rod mounted ERT installs) Christy B16-61P lid (3/16" steel checker plate, Driveways, Sidewalk, Lid mounted ERT installs)
ERT (b) 10	N/A	Encoder Receiver Transmitter	N/A	N/A	ITRON 100W pit ERT w/ 1/2"Ø Fiberglass Mounting Rod 24" long. Alternate Register Bracket mount may be used upon approval of Public Works Dept

a. Alternative fittings must be approved by the City Engineer.

b. The standard installation is a N16 box with a composite (FL16D) lid and a fiberglass mounting rod. All other methods require prior approval and are meant to allow for obstructions or other unforeseen installation conditions.

Dr.	No.	Date	Revision	Appr.
	3	10/05	ADDED METER & ERT	
Ch.	4	7/09	CHANGED CUSTOMER VALVE	
	5	3/10	REVISED PER AB 1953 REQ'S.	
Date	6	4/11	REVISED ERT MOUNTING.	

Approved By: F. Wally Sandelin 4/12/11

F. Wally Sandelin
City Engineer
R.C.E. 39895

Date

STD PLAN

403

CITY OF LODI
PUBLIC WORKS DEPARTMENT

Water Blow-off Permanent

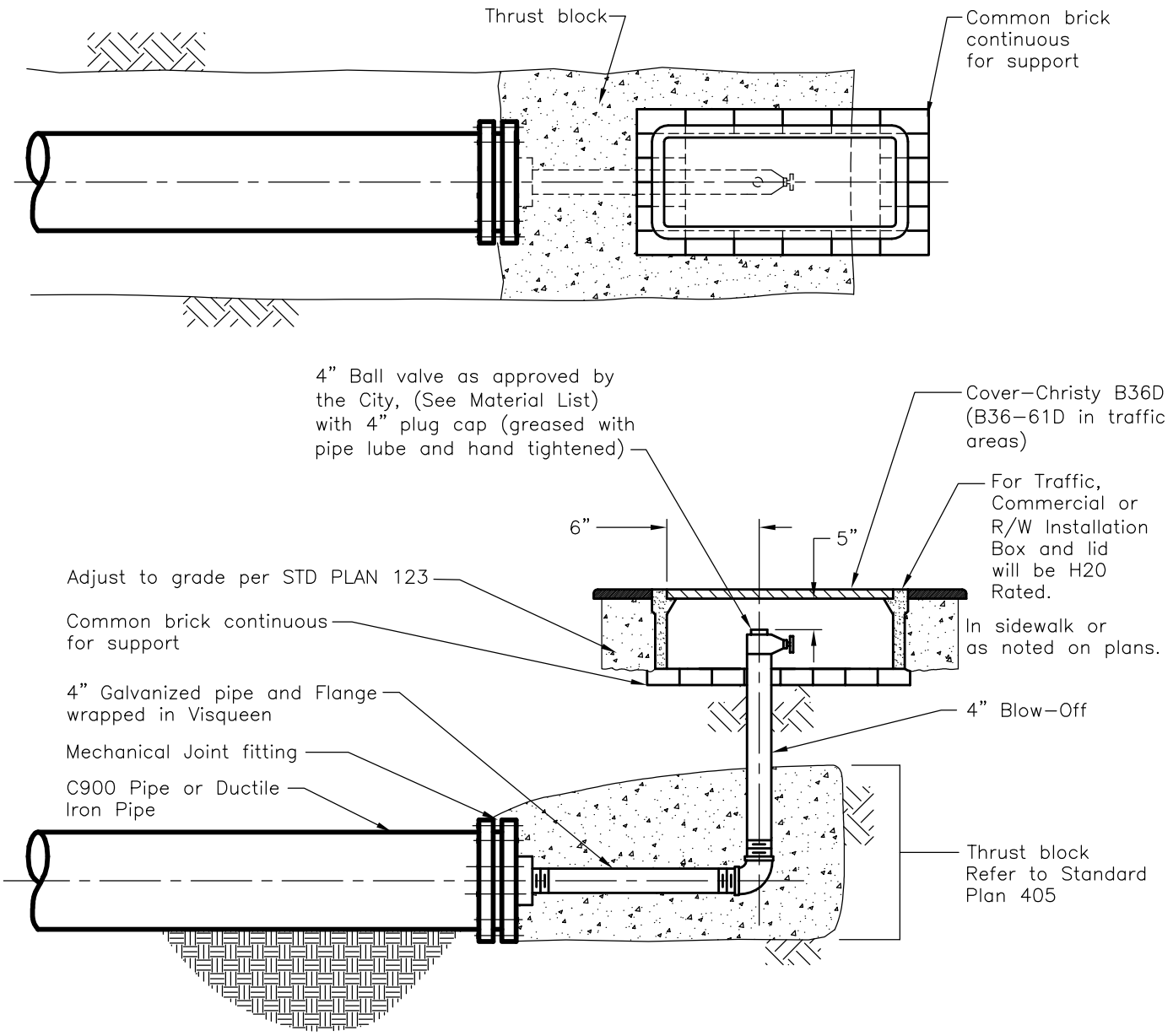

Notes:

1. No services within 3' of blow-off.

Sheet 1 of 2

Dr. KT	No.	Date	Revision	Appr.	Approved By:	STD PLAN
	1	9/03	REVISED APPROVED BALL VALVE		F. Wally Sandelin 2/2/05	404
Ch. WS	2	2/05	ADDED PLUG FOR BALL VALVE		F. Wally Sandelin, City Engineer, R.C.E. 39895 — Date	
Date 12/00						

CITY OF LODI

PUBLIC WORKS DEPARTMENT

Water Blow-off Permanent Material List

Material List for Standard Plan 404

City Approved Ball Valves
- Flow-Teck's Forged Brass Ball Valve Model S50
- Matco-Norca, Inc. Model 752 or
- Watts Model 75-0211

City Approved Boxes
- Box Bes C-36W or Christy B-36 or
- Christy B-17 x 30

Dr. KT	No.	Date	Revision	Appr.
	1	9/03	REVISED APPROVED BALL VALVE	
Ch. WS	2	2/05	REVISED PAGE 1	
Date 12/00				

Approved By: F. Wally Sandelin
F. Wally Sandelin
City Engineer
R.C.E. 39895

2/2/05
Date

STD PLAN
404

CITY OF LODI
PUBLIC WORKS DEPARTMENT

Thrust Block Requirements

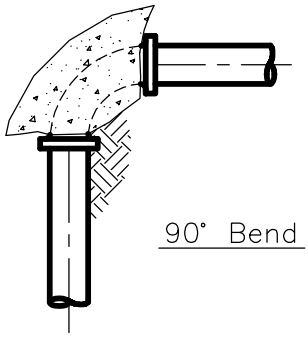

90° Bend

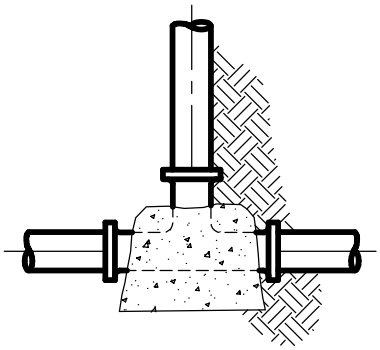

Tee

No thrusting on cross except where ends are plugged.

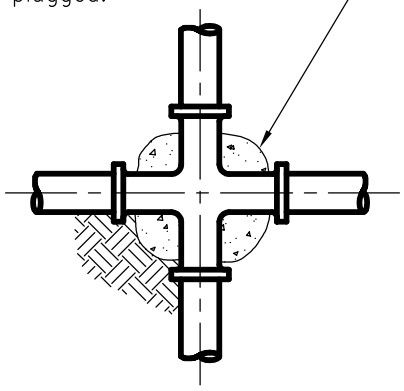

Cross

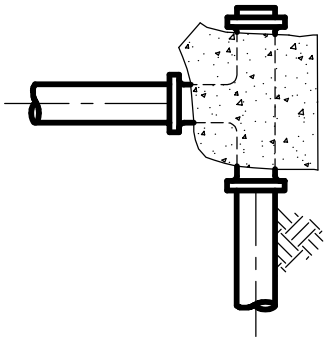

Plugged Tee

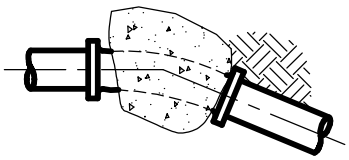

45° or $22\frac{1}{2}$°

Horizontal Bend

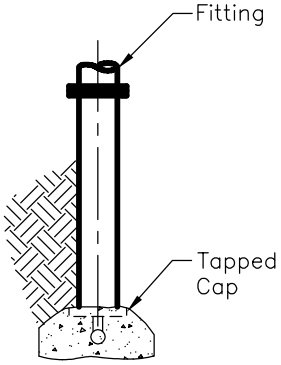

Blow off

Minimum Thrust Block Bearing Areas In Square Feet				
Pipe Sizes	90°	45°	$22\frac{1}{2}$°	Tees & Blow Off
6"	3	2	2	2
8"	4	3	2	3
10"	6	4	3	4
12"	8	5	3	6
14"	12	7	4	8

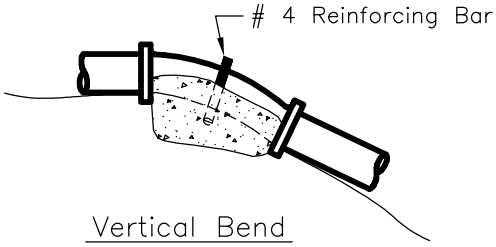

Vertical Bend

Notes:

1. Concrete shall be 2000 PSI minimum at 28 days.
2. Thrust blocks shall be placed against undisturbed earth.
3. All fittings shall be supported in concrete.
4. For fire hydrant thrusting see Std. Plan 401.
5. Don't cover flange bolts with concrete.
6. Mechanically restrained joints as required by the City. See Material List Page 2.
7. Wrap all fittings and flanges with Visqueen.

Sheet 1 of 2

Dr. KT	No.	Date	Revision	Appr.
Ch. WS	1	9/03	ADDED NOTE #7	
Date 12/00				

Approved By: F. Wally Sandelin, City Engineer, R.C.E. 39895 — 9/25/02 Date

STD PLAN 405

CITY OF LODI

PUBLIC WORKS DEPARTMENT

Thrust Block Requirements Material List

Material List for Standard Plan 405

City Approved Mechanical Restrained Joints

Pipe Material	Joint
Ductile Iron	Mega-Lug 1100
C900PVC	Mega-Lug 2000
IPS PVC	Mega-Lug 2000
PVC Bell and Spicket	Mega-Lug 1600

Sheet 2 of 2

Dr. KT	No.	Date	Revision	Appr.
Ch. WS	1	9/03	ADDED NOTE #7	
Date 12/00				

Approved By: F. Wally Sandelin 9/25/02

F. Wally Sandelin
City Engineer
R.C.E. 39895

Date

STD PLAN

405

CITY OF LODI

PUBLIC WORKS DEPARTMENT

DOMESTIC WATER SERVICE (3", 4", 6" & 8")

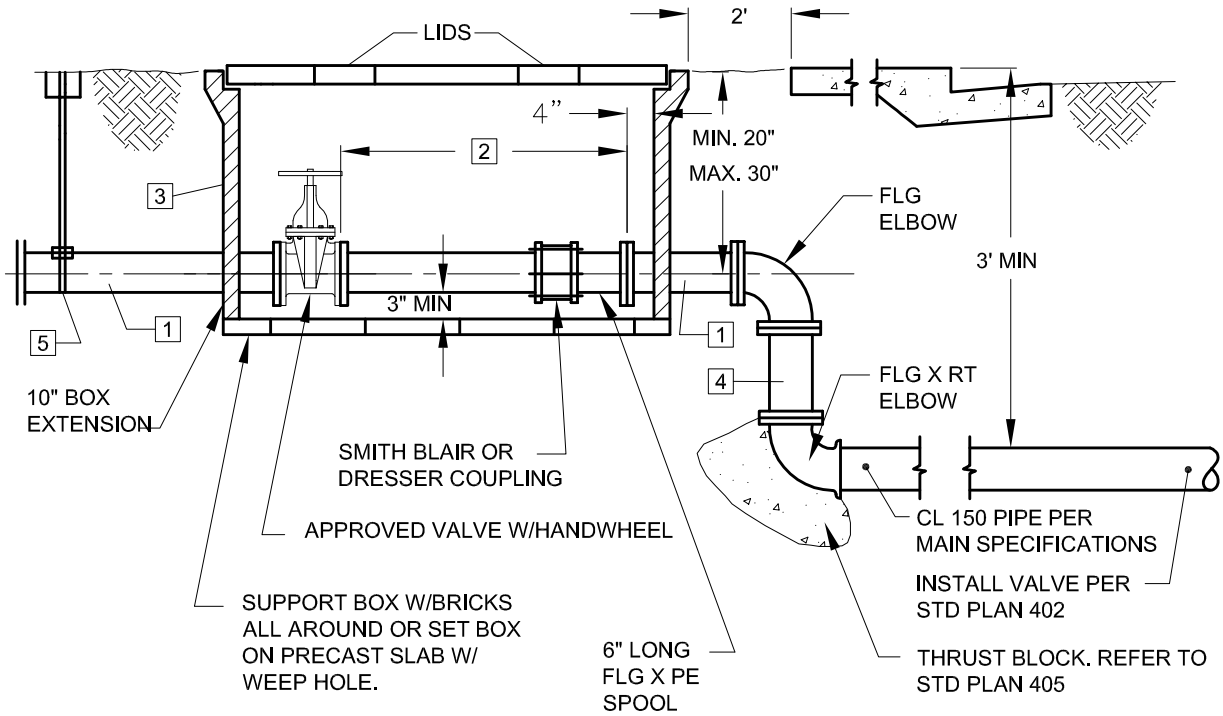

NOTES:

1. METER (IF REQUIRED) WILL BE FURNISHED AND INSTALLED BY CITY.
2. BYPASS MAY BE INSTALLED WITH THE SPECIFIC APPROVAL OF THE PUBLIC WORKS DIRECTOR.
3. PLUG ALL OPENINGS IN BOX.
4. BACKFILL SHALL CONFORM TO STD PLAN 501.
5. ALL FITTINGS MUST COMPLY WITH THE LATEST STATE OF CALIFORNIA NO LEAD REQUIREMENTS.

Dr. KT	No.	Date	Revision	Appr.
	1	2/05	REVISED SPOOL LENGTH'S	
Ch. WS				
Date 12/00				

Approved By:

Charlie Swimley — Date
City Engineer / Deputy Public Works Director
RCE No. 52842

STD PLAN

406

CITY OF LODI

PUBLIC WORKS DEPARTMENT

DOMESTIC WATER SERVICE (3", 4", 6" & 8") MATERIALS LIST

1 FLG SPOOL, 24" LONG (2 EA) (C.I., D.I., OR STEEL)

2 FLG X PLAIN END SPOOL. LEAVE 1" GAP AT COUPLING
3" - 29" LONG
4" - 38" LONG ENDS OF SPOOLS
6" - 43" LONG (C.I. OR STEEL)

3

CHRISTY OR BES BOX	LID (TRAFFIC)		BOX EXTENSION
	CHRISTY	BES	
3"+4" B-48 OR C48W	B48-62D	62D85	10" BOX EXTENSION B48 X 10
6" B-52 OR C52W	B52-62D	62D90	10" BOX EXTENSION B52 X 10

4 FLG SPOOL, LENGTHS AS NEEDED (OPTIONAL) (C.I., D.I., OR STEEL)

5 TEMPORARY BLOWOFF PER STD PLAN 409. 2" FOR 4"-6" SERVICE, 4" FOR 8" AND LARGER SERVICE.

ALL FITTINGS SHALL BE CAST OR DUCTILE IRON OR STEEL (AS NOTED) AND SHALL CONFORM TO APPLICABLE AWWA STANDARDS. (SCH. 40, 150 LB. FLG)

TRAFFIC LIDS SHALL BE USED IN ALL LOCATION.

Dr. KT	No.	Date	Revision	Appr.
Ch. WS	1	2/05	REVISED SPOOL LENGTH'S	
Date 10/08	2	10/08	REVISED SPOOL LENGTH'S	

Approved By:

Charlie Swimley Date
City Engineer / Deputy Public Works Director
RCE No. 52842

STD PLAN

406

CITY OF LODI

PUBLIC WORKS DEPARTMENT

Fire Service

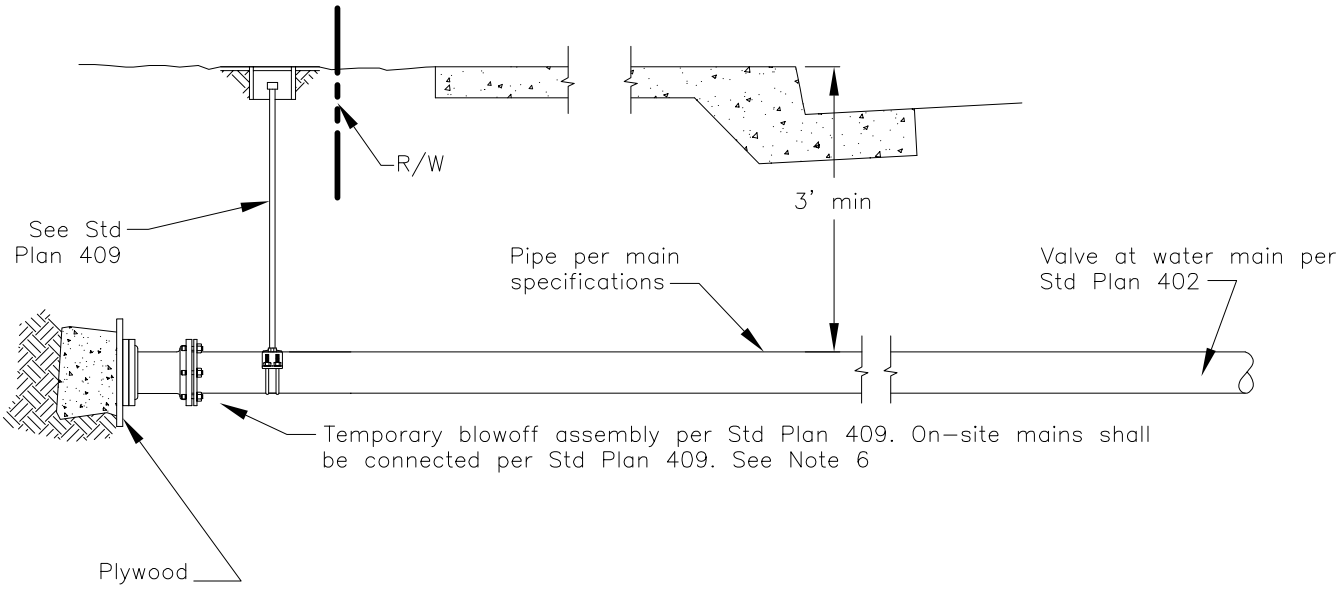

4" & Larger Service

Notes:

1. If not alarmed a detector check valve w/bypass meter shall be installed at fire-sprinkler system connection only. Installation details shall conform to Fire Dept. and Bldg. Dept. requirements. (See Detail A)
2. On-site fire mains shall be completely isolated from domestic lines.
3. On-site fire mains looped to the City system must be specifically approved by the Public Works Director and must be equipped with double check valve assemblies at each connection. In such cases the services shall be installed per Std. Plan 406 with the Double Check Valve assemblies installed in an appropriately sized box at the property line.
4. Suitable backflow prevention devices will be required for fire systems having auxiliary sources of supply, elevated tanks or chemical additives, or other special conditions.
5. Sufficient valves shall be provided to separate sprinkler, hydrant and domestic systems. Additional main line valves may be required depending on the complexity of the on-site system.
6. Pressure and bacteriological tests per City of Lodi Construction Specifications are required for on-site systems unless waived by the Public Works Director.
7. Systems with booster pumps shall be equipped with a pressure sustaining valve to the approval of the Public Works Director.

Sheet 1 of 2

Dr. KT	No.	Date	Revision	Appr.	Approved By:	STD PLAN
	1	9/03	REVISED F.D.C. LOCATION		F. Wally Sandelin, City Engineer, R.C.E. 39895 — 2/12/04 Date	407
Ch. WS	2	2/04	REVISED TEMP. BLOW OFF VALVE			
Date 12/00						

CITY OF LODI
PUBLIC WORKS DEPARTMENT

Fire Service

* Locations of hydrants, Fire Dept. connections & detector checks to be determined by the Fire Marshal.

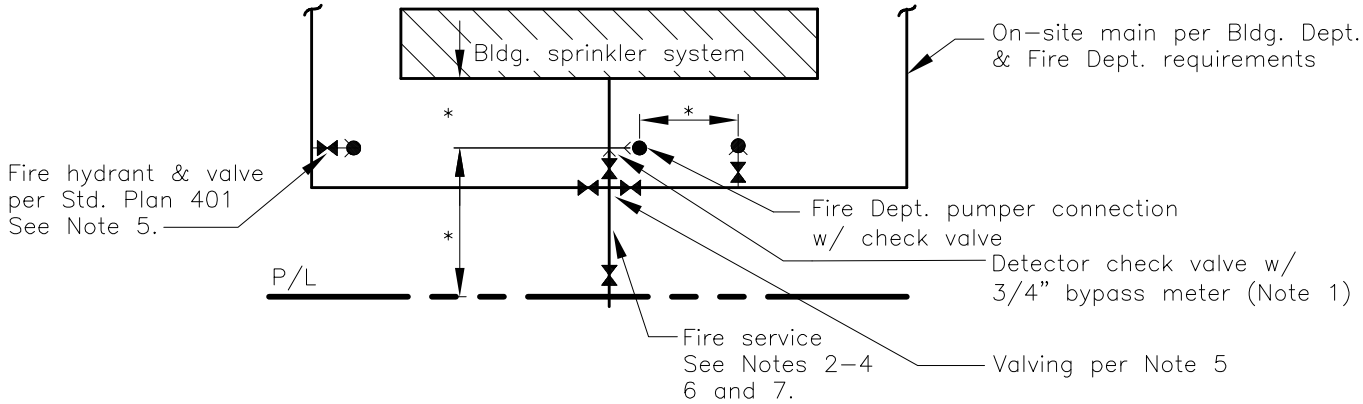

Detail A
Fire Service

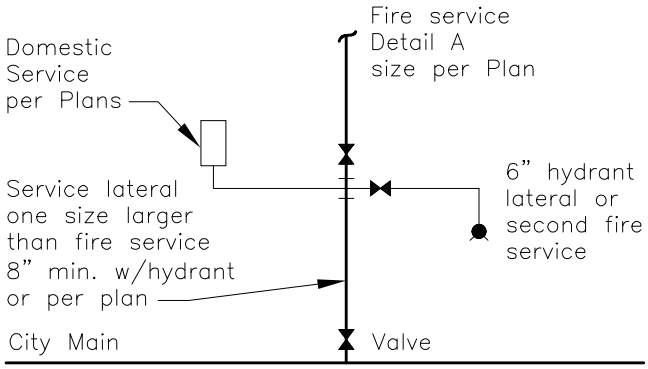

Detail B
Combined Fire/Domestic Service

Sheet 2 of 2

Dr. KT	No.	Date	Revision	Appr.	Approved By:	STD PLAN
Ch. WS	1	9/03	REVISED F.D.C. LOCATION		F. Wally Sandelin, City Engineer, R.C.E. 39895 — 9/25/02 Date	407
Date 12/00						

CITY OF LODI

PUBLIC WORKS DEPARTMENT

Water Valve Frame & Cover

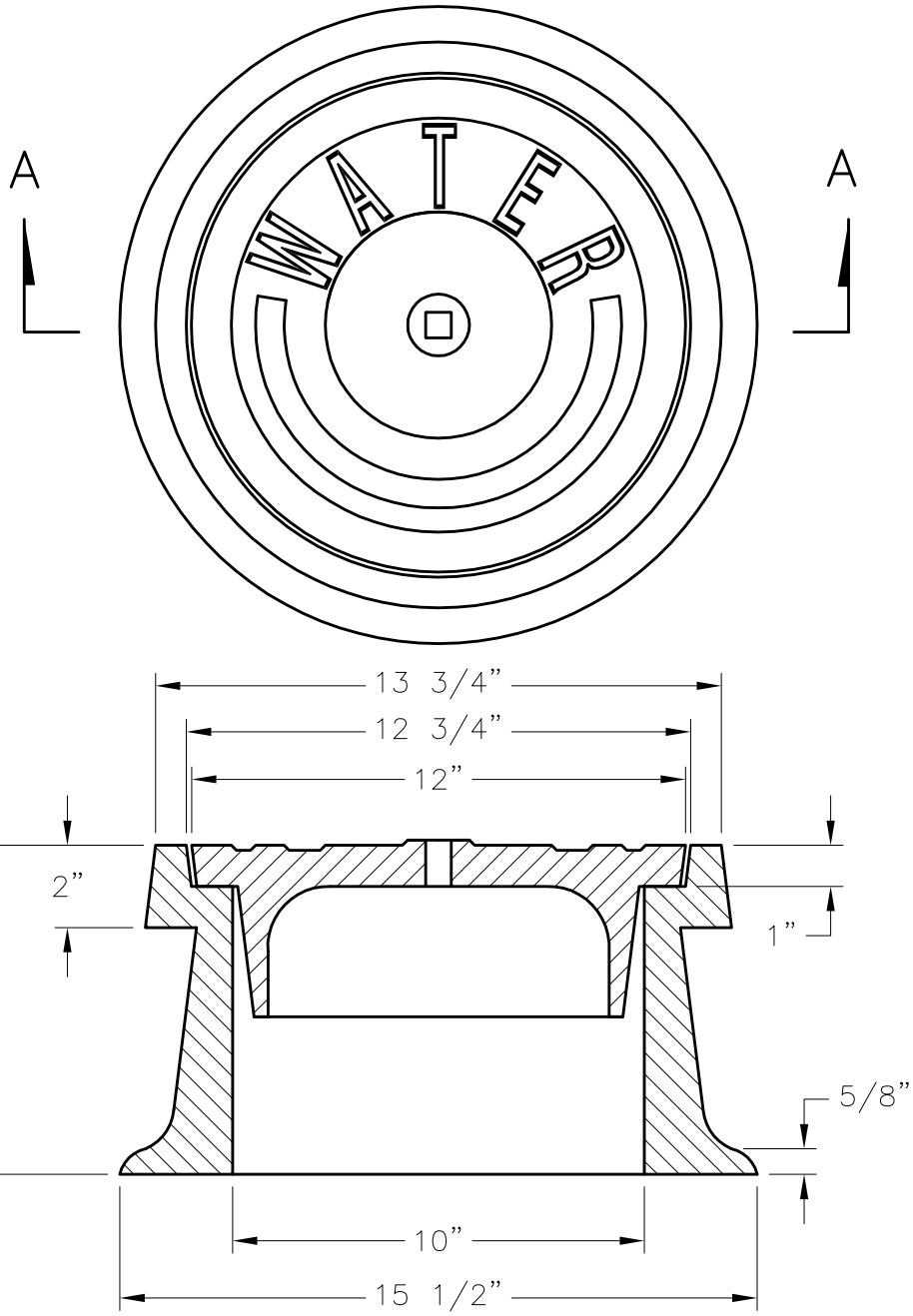

Section A–A

Notes:

1. Frame – Wt 85 Lbs.
2. Cover – Wt 40 Lbs.
3. Material – Cast Iron
4. Castings shall be dipped in black, bituminous paint.
5. Frame and cover must be H–20 wheel loading rated.

Dr. KT	No.	Date	Revision	Appr.	Approved By: F. Wally Sandelin, City Engineer, R.C.E. 39895 — 5/28/08 Date
Ch. WS					STD PLAN
Date 7/08					408

CITY OF LODI

PUBLIC WORKS DEPARTMENT

Temporary Water Blow–off and Connection Details

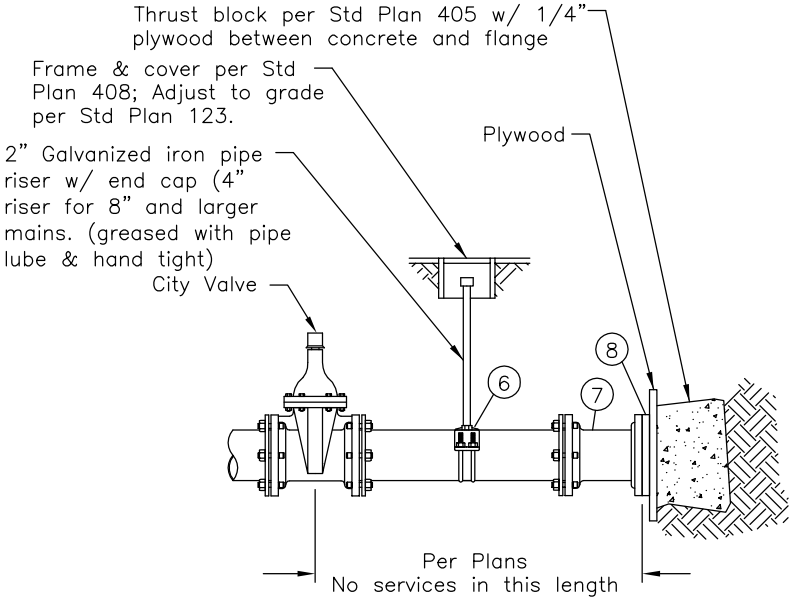

Temporary Blow–off

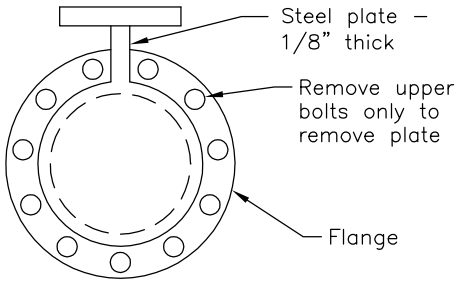

Removable Steel Plate

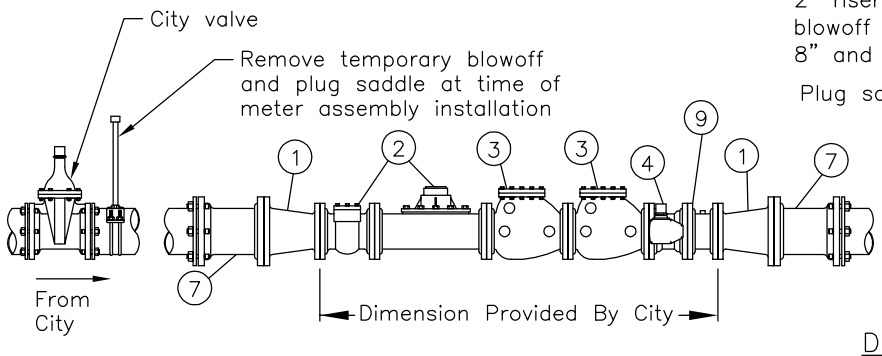

Detail A: Temporary Connection with Meter Assembly

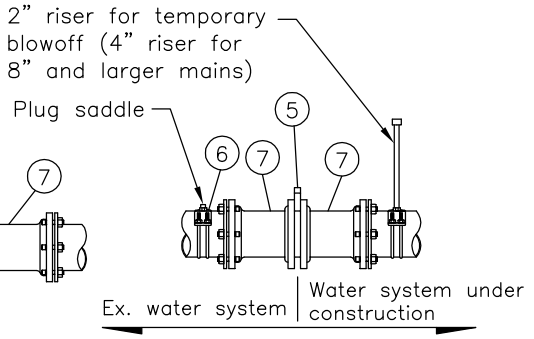

Detail B: Temporary Connection without Meter Assembly

Notes:

1. The Contractor shall not operate any City valves. 24 hours notice is required for operation by City.

2. All connections to the existing system shall be made per Details A or B. Upon acceptance of the new system, the Contractor shall remove the riser, plug the saddles and remove the steel plate. Contractor shall also remove the meter assembly and install a flanged spool. Meter assembly shall be returned to the City.

3. Contractor shall supply and install reducers on meter assembly where main is larger than 6".

4. City shall furnish meter assembly upon receipt of deposit. Meter assembly to be installed by Contractor.

Sheet 1 of 2

Dr. SN	No.	Date	Revision	Appr.	Approved By:	STD PLAN
Ch. WS	1	9/03	REDRAWN		F. Wally Sandelin, City Engineer, R.C.E. 39895 — 2/2/05 Date	409
Date 02/02	2	2/05	REVISED METER SPOOL ASSEMBLY DIMENSION			

CITY OF LODI

PUBLIC WORKS DEPARTMENT

Temporary Water Blow-off and Connection Details Materials List

Fittings Legend:

1. Flanged Reducer (Furnished by the Contractor)
2. Meter with Strainer
3. Check Valve
4. Butterfly Valve
5. Removable Steel Plate.
6. Double Strap Malleable Iron Saddle
7. Adapter MJ/FLG, Full face flange only. (Furnished by the Contractor)
8. Blind Flange
9. 6" Flg x Flg spool w/ 2" tapped fitting

Dr. KT	No.	Date	Revision	Appr.
Ch. WS	1	9/03	REDRAWN	
Date 12/00	2	2/05	REVISED PAGE 1	

Approved By: F. Wally Sandelin, City Engineer, R.C.E. 39895 — 2/2/05 Date

STD PLAN 409

CITY OF LODI

PUBLIC WORKS DEPARTMENT

Water & Wastewater Service Modification

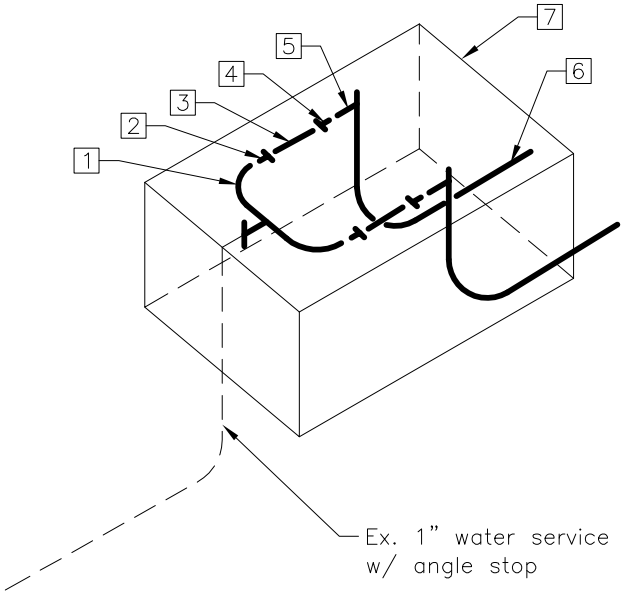

Water Service

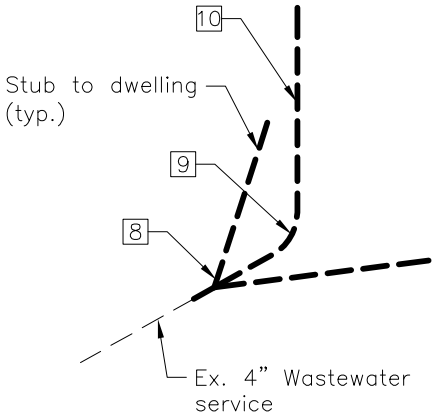

Wastewater Service

Notes:

1. This standard plan to be used for modification of existing Water an Wastewater services to lots being split for construction of zero lot line dwellings or where two services are sharing a tap.
2. See Std Plan 403 for water service details.
3. Wastewater materials to be ESVCP ASTM C-700, PVC ASTM D3034 SDR 35 or ABS ASTM D-2751
4. Locate service box and clean-out as close as possible to Property Line.

Sheet 1 of 2

Dr. KT	No.	Date	Revision	Appr.	Approved By:	STD PLAN
Ch. WS					F. Wally Sandelin 12/28/00	410
Date 12/00					F. Wally Sandelin, City Engineer, R.C.E. 39895 — Date	

CITY OF LODI

PUBLIC WORKS DEPARTMENT

Water & Wastewater Service Modification Materials LIst

Legend:

1. Mueller H-15364 U-Branch Connection 1" inlet 8" center to center. 3/4" outlet
2. Mueller H-14215 Meter Coupling catalog size 5/8"x3/4"x3/4".
3. 9" lg. spacer per Std Plan 403
4. Mueller H-10890 Coupling.
5. 3/4" Customer Valve-Stockham B-216, Mueller 8130, Nibco T-311-Y.
6. 3/4" Sch. 40 PVC Stub.
7. Christy B-36 box per Std Plan 412
8. 4" Double Wye or 2-4" Wyes in-line.
9. 4"-90° Elbow (long bend)
10. Cleanout per Std Plan 201

Dr. KT	No.	Date	Revision	Appr.	Approved By: F. Wally Sandelin 12/28/00
Ch. WS					F. Wally Sandelin, City Engineer, R.C.E. 39895 — Date
Date 12/00					STD PLAN 410

CITY OF LODI

PUBLIC WORKS DEPARTMENT

Double Check Valve Assembly

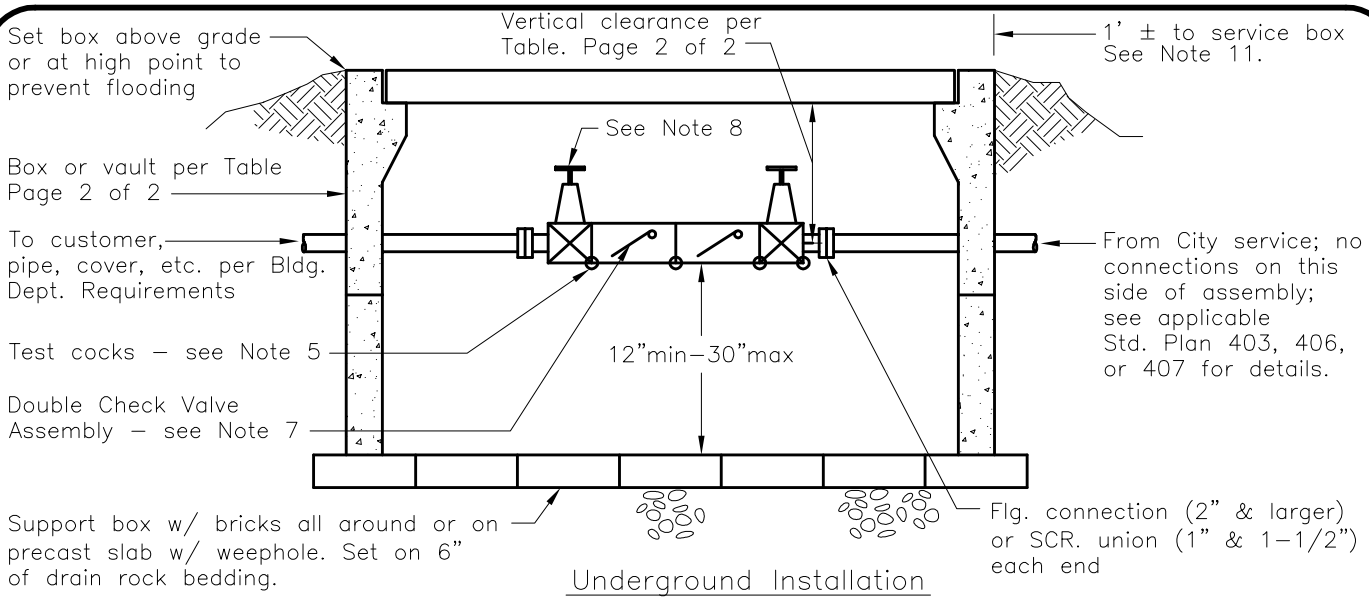

Underground Installation

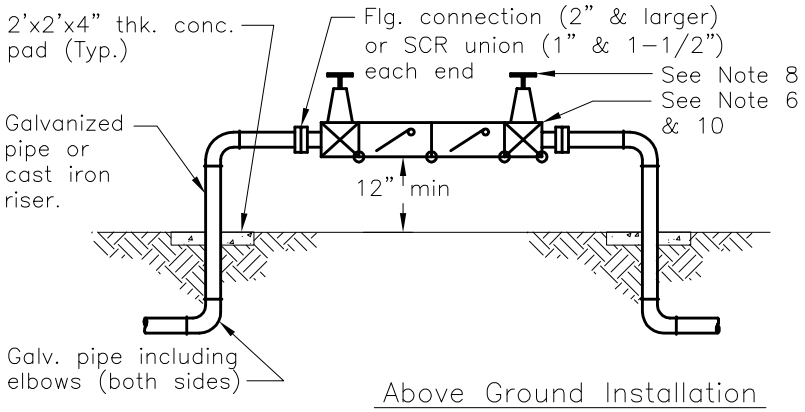

Above Ground Installation

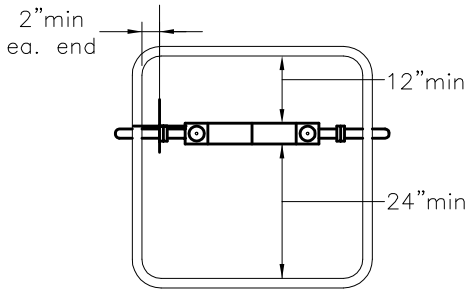

Plan

Notes:

1. It is the customer's responsibility to have the assembly tested prior to acceptance and annually by a State Certified Backflow Prevention Tester and report the results to the Public Works Department.
2. Plug all openings in box.
3. Traffic lids shall be used where applicable.
4. Vertical clearance may be increased for OS&Y valves.
5. Offset box over assembly to provide testing clearance per plan.
6. Assembly installed above ground may be enclosed with clearances similar to underground installation.
7. Use FEBCO 850 or approved equal per State Standards.
8. Valve handles may be chained & padlocked for security.
9. This plan for domestic service only. Design for fire service applications to have approval of Public Works Director and Fire Marshal.
10. Install guard posts where device is installed in paved areas accessible to traffic or in planters less than 3' behind the curb or when directed by City.
11. Locate immediately downstream of water service box.

Sheet 1 of 2

Dr. KT	No.	Date	Revision	Appr.	Approved By:	STD PLAN
Ch. WS	1	2/04	REVISED MODEL NUMBER ON NOTE #7		F. Wally Sandelin, City Engineer, R.C.E. 39895 — 2/12/04 Date	411
Date 12/00						

CITY OF LODI

PUBLIC WORKS DEPARTMENT

Double Check Valve Assembly Materials List

Size	Vertical Clearance min	Vertical Clearance max	Box or Vault / Lid (See Note 3) (min)	
1"	8"	18"	Christy B40 or Bes C40W Box/	Christy B40-61D or Bes 61D75
1-1/2"	10"	20"	Christy B48 or Bes C48W Box/	Christy B48-62D or Bes 62D85
2"	10"	20"	Christy B48 or Bes C48W Box/	Christy B48-62D or Bes 62D85
3"	16"	30"	4'x4' / Split, hinged lid	Christy B52 or Bes C52W box/ Christy or Bes 62D90
4"	20"	36"	4'x4' / similar to Forni-	
6"	24"	40"	7'x5' / HAL-Lucero	
8"	30"	48"	7'x5' / Assembly	

Sheet 2 of 2

Dr. KT	No.	Date	Revision	Appr.	Approved By:	STD PLAN
Ch. WS					F. Wally Sandelin 12/28/00	411
Date 12/00					F. Wally Sandelin, City Engineer, R.C.E. 39895 — Date	

CITY OF LODI

PUBLIC WORKS DEPARTMENT

2" WATER SERVICE FOR 1-1/2" OR 2" METER W/ RADIO READ

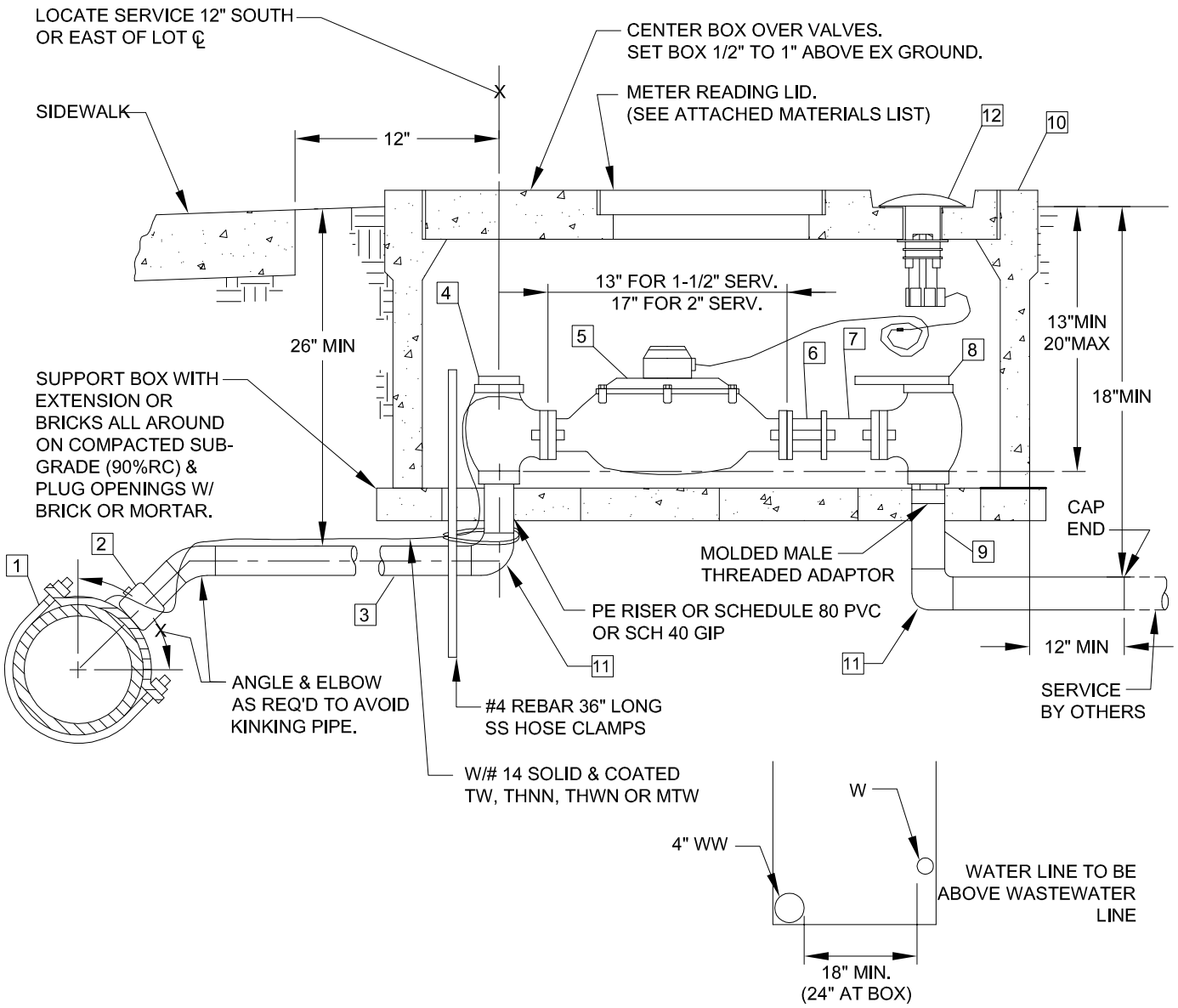

TRENCH SECTION

NOTES:

1. MAINTAIN 24" CLEARANCE BETWEEN TAP AND ANY COUPLING, FITTING OR ADJACENT TAP. PLASTIC SERVICES SHALL BE INSTALLED WITH SLACK IN THE LINE. IF THE SERVICE IS INSTALLED IN THE SAME TRENCH AS SANITARY SERVICE, THE WATER SERVICE SHALL BE INSTALLED WITHOUT SPLICES AND THE TRENCH SECTION SHOWN APPLIES:
2. S.S. LINERS REQUIRED ON PE PIPE FITTINGS.
3. BACKFILL SHALL CONFORM TO STD PLAN 501.
4. ALL FITTINGS MUST COMPLY WITH THE LATEST STATE OF CALIFORNIA NO LEAD REQUIREMENTS.

Dr.	No.	Date	Revision	Appr.
	1	9/03	ADDED END CAP	
Ch. WS	2	2/04	REVISED PAGE 4	
	3	2/05	REVERSED TRENCH SECTION	
Date	4	6/10	REVISED PER AB 1953 REQ'S.	

Approved By:

Charlie Swimley — Date
City Engineer / Deputy Public Works Director
RCE No. 52842

STD PLAN

412

CITY OF LODI

PUBLIC WORKS DEPARTMENT

2" WATER SERVICE FOR 1-1/2" OR 2" METER MATERIAL LIST

FITTING (A)	SIZE	BASIC FEATURE	INLET CONNECTION	OUTLET CONNECTION	MANUFACTURER'S NOS.
SADDLES 1	2"	FOR C1-AC & DUCTILE IRON PIPE DUCTILE IRON DOUBLE STRAP SADDLE NO SINGLE STRAP SADDLES		IPT	ROCKWELL 313 APAC 102 OTHER MANUFACTURERS WITH SIMILAR DESIGNS O.K.
SADDLES	2"	FOR C900 PIPE		IPT	ROMAC 101S MUELLER H1349 WITH 1P THREAD
CORP. STOP 2	2"	BALL VALVE	2" IPT	2" CTS COMP	A.Y. MCDONALD 4704B-22 OR APPROVED EQUAL
CORP. STOP	2"	BALL VALVE	2" IPT	2" IPT	A.Y. MCDONALD 3122B OR APPROVED EQUAL

Dr.	No.	Date	Revision	Appr.
	1	9/03	ADDED END CAP	
Ch. WS	2	2/04	REVISED PAGE 4	
	3	2/05	REVISED PAGE 1	
Date	4	6/10	REVISED PER AB 1953 REQ'S.	

Approved By:

Charlie Swimley — Date
City Engineer / Deputy Public Works Director
RCE No. 52842

STD PLAN

412

CITY OF LODI

PUBLIC WORKS DEPARTMENT

2" WATER SERVICE FOR 1-1/2" OR 2" METER MATERIAL LIST

FITTING (A)	SIZE	BASIC FEATURE	INLET CONNECTION	OUTLET CONNECTION	MANUFACTURER'S NOS.
SERVICE PIPE 3	2"				C.T.S. PE 3408 200 PSI SDR9 ASTM D-2737 SCH 80 PVC WITH TRACE WIRE, OR SCH 40 GIP
ANGLE STOP 4	2" 2"	BALL VALVE WITH LOCKWING BALL VALVE WITH LOCKWING	2" CTS COMP. 2" FNPT	2" 2 HOLE METER FLANGE 2" 2 HOLE METER FLANGE	A.Y. MCDONALD 4602B-22 OR APPROVED EQUAL. A.Y. MCDONALD 4604B OR APPROVED EQUAL.
METER 5	1-1/2" OR 2"	BRONZE 13" LONG FOR 1-1/2" SERVICE 17" LONG FOR 2" SERVICE W/ RUBBER WASHER	2 HOLE FLG	2 HOLE FLG	J129 BADGER 120 OR 170 SENSUS SR-BA HERSEY 562 OR 572
COUPLING 6	1-1/2" OR 2"	FLANGED METER COUPLING ADAPTER MALLEABLE IRON	2 HOLE FLG WITHOUT RING	COMPRESSION COUPLING TO SCH. 80 NIPPLE	ROCKWELL 926 METER COUPLING
SPOOL & FLANGE 7	1-1/2" OR 2"	PVC SCH. 80 & BRONZE FLG.	2 HOLE FLG	PLAIN END	9 1/2" LONG FOR 1 1/2" METER 5 1/2" LONG FOR 2" METER
CUSTOMER VALVE 8	2"	BALL VALVE WITH LOCKWING ALL VALVES MUST HAVE BRASS HANDLE	2" FNPT	2" 2 HOLE METER FLANGE	A.Y. MCDONALD 4604B OR APPROVED EQUAL. HANDLE A.Y. MCDONALD 6120BS OR APPROVED EQUAL.
CUSTOMER STUB 9	2"	PVC SCH. 80	PLAIN END	PLAIN END	IPS PVC SCHEDULE 80 PER UNIFORM PLUMBING CODE. (SAME SIZE AS SERVICE PIPE)

Dr.	No.	Date	Revision	Appr.
	1	9/03	ADDED END CAP	
Ch. WS	2	2/04	REVISED PAGE 4	
	3	2/05	REVISED PAGE 1	
Date	4	6/10	REVISED PER AB 1953 REQ'S.	

Approved By:

Charlie Swimley — Date
City Engineer / Deputy Public Works Director
RCE No. 52842

STD PLAN

412

CITY OF LODI

PUBLIC WORKS DEPARTMENT

2" WATER SERVICE FOR 1-1/2" OR 2" METER MATERIAL LIST

FITTING (A)	SIZE	BASIC FEATURE	INLET CONNECTION	OUTLET CONNECTION	MANUFACTURER'S NOS.
SERVICE BOX 10	2"	ALL LIDS TO READ WATER & HAVE HOLES IN LIDS FOR ERT			CHRISTY B36 CHRISTY 36-R-P001BO (FLUSH FIT FOOT TRAFFIC, GRASS AREAS, LID MOUNTED ERTS ONLY) CHRISTY FL36D (FOOT TRAFFIC, GRASS AREAS, FLUSH FIT) CHRISTY B36-61P 1/4" STEEL CHECKER PLATE (DRIVEWAYS, SIDEWALKS, LID MOUNTED ERTS ONLY) CHRISTY B1730 FULL VEHICULAR TRAFFIC BOX CHRISTY B40 BOX CHRISTY B40-61D LID 1/4" STEEL PLATE (LID MOUNTED ERT'S ONLY) CHRISTY B24X36 FULL VEHICULAR TRAFFIC BOX
90° PJ ELBOW 90° ELBOW 11			2" PJ CTS 2"	2" PJ CTS 2"	2" FORD L44-77 2" MUELLER H-15526 WITH INSERT PVC
ERT 12	N/A	ENCODER RECEIVER TRANSMITTER	N/A	N/A	ITRON 100W PIT ERT W/ THROUGH THE LID MOUNTING KIT OR $\frac{1}{2}$"Ø FIBERGLASS MOUNTING ROD 24" LONG MAY BE USED UPON APPROVAL OF PUBLIC WORKS DEPT.

A. ALTERNATE FITTINGS MUST BE APPROVED BY THE CITY ENGINEER.

Dr. KT	No.	Date	Revision	Appr.
Ch. WS	1	9/03	ADDED END CAP	
Date 12/00	2	2/04	ADDED PVC 90 ELBOW	
	3	2/05	REVISED PAGE 1	
	4	6/10	REVISED PER AB 1953 REQ'S.	

Approved By:

Charlie Swimley — Date
City Engineer / Deputy Public Works Director
RCE No. 52842

STD PLAN

412

CITY OF LODI

PUBLIC WORKS DEPARTMENT

Reduced Pressure Backflow Device Assembly

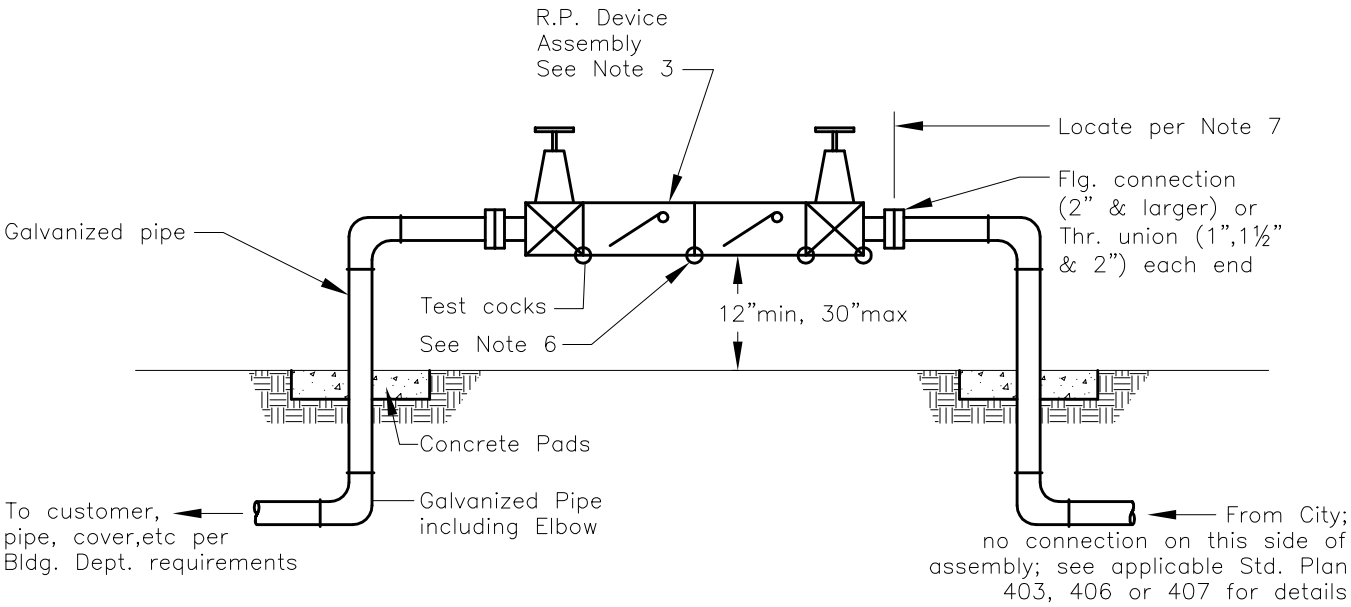

Above Ground Installation

Notes:

1. It is the customers responsibility to have the assembly tested prior to acceptance and annually by a State Certified Backflow Prevention Tester and report the results to the Public Works Department.
2. Install guard posts where device is installed in paved areas accessible to traffic or in planters less than 3' behind the curb or when directed by City.
3. FEBCO 825Y or approved equal, must be on list of approved Backflow Prevention Assemblies Dept. of Health Services.
4. Valve handles may be chained & padlocked for security.
5. This plan for domestic service only. Design for fire service applications to have approval of Public Works Director and Fire Marshal.
6. Provide drainage (with air gap) for pressure relief discharge.
7. Locate assembly immediately down stream of service box.

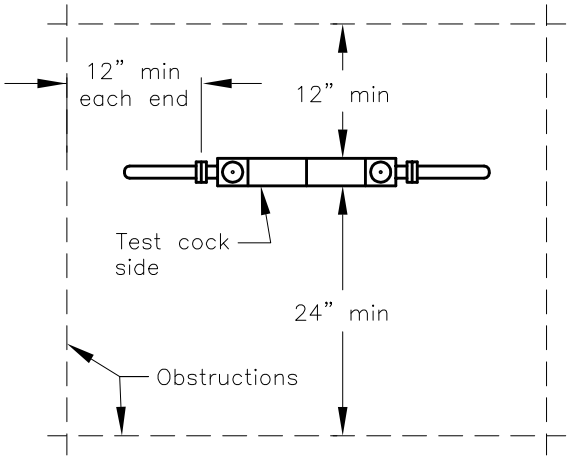

Clearance requirements

Plan

Dr. KT	No.	Date	Revision	Appr.	Approved By:	STD PLAN
Ch. WS					F. Wally Sandelin, City Engineer, R.C.E. 39895 — 12/28/00 Date	413
Date 12/00						

CITY OF LODI

PUBLIC WORKS DEPARTMENT

Dual Water & Wastewater Service

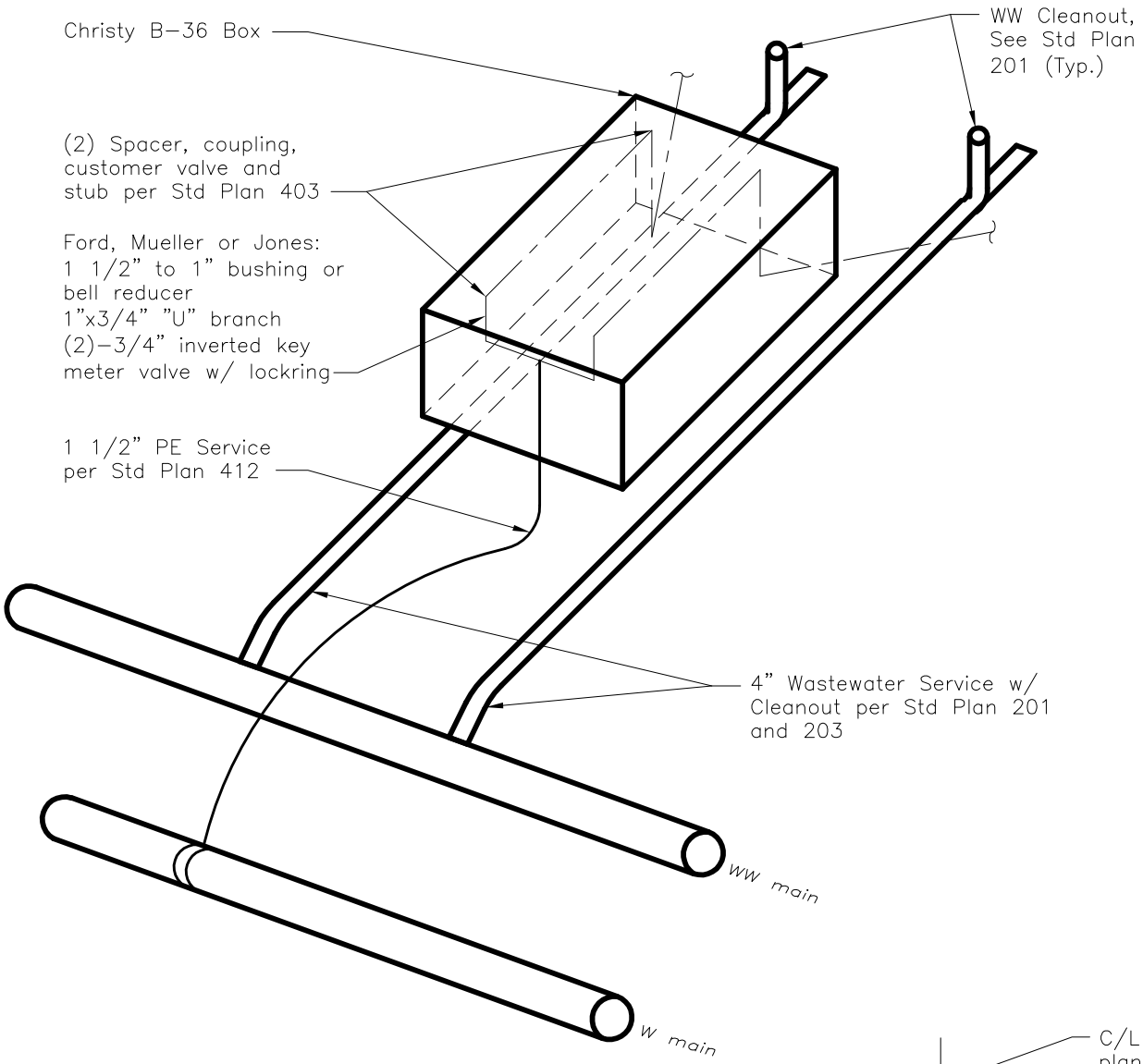

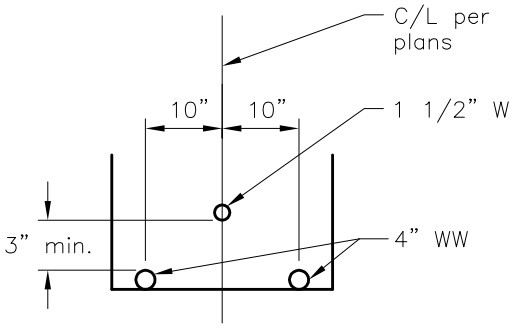

Trench Section

Notes:

1. This Std plan is to be used primarily in residential subdivisions on lot lines opposite the utility joint trench. A utility coordination plan showing service locations is required.
2. See Std Plans 201, 203, 403, and 412 for materials and installation details.

Dr. KT	No.	Date	Revision	Appr.	Approved By:	STD PLAN
Ch. WS					F. Wally Sandelin 12/28/00	414
Date 12/00					F. Wally Sandelin, City Engineer, R.C.E. 39895 — Date	

CITY OF LODI

PUBLIC WORKS DEPARTMENT

Water Main Separation from Sanitary Hazard—New Wastewater Line Construction

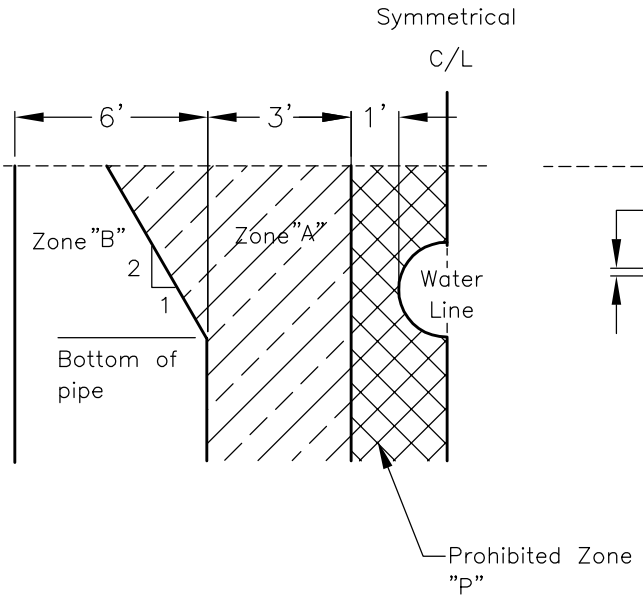

CASE 1
New Wastewater Line
Parallel Construction

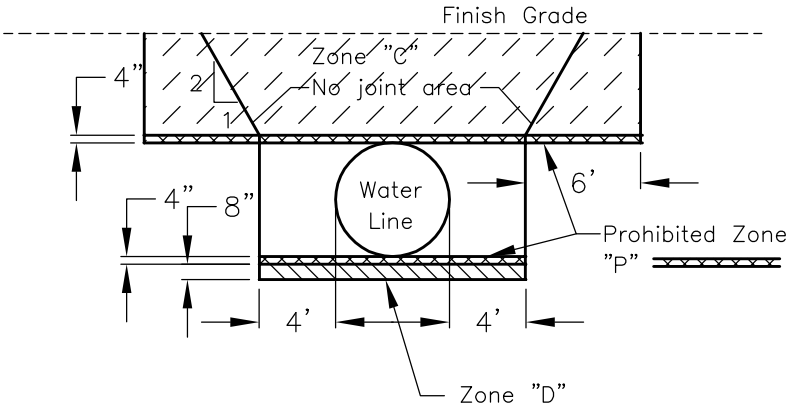

CASE 1
New Wastewater Line
Crossing

WASTEWATER LINE CONSTRUCTION REQUIREMENTS
ZONE

A	B	C	D	P
Requires specific approval of the City Engineer details on plans	Pipe: ESVCP, bell & spigot joint only; PVC water pipe; Ductile Iron pipe. (Storm Drain only—Conc. Pipe)	Pipe: Ductile Iron or Class 200 PVC water pipe centered over water main. Note the "No Joint" area over water main	Pipe: Same as Zone C, no joints allowed	Prohibited—No new wastewater line in this area

Notes:

1. This Standard Plan shows normal construction requirements/options for reduced separation of existing water mains from new sanitary sewers and storm drains (including mains & laterals). It does not apply to pipes over 24 inches in diameter, to force mains or to services crossing under a water main (see Note 3). See State Dept. of Health Services Standards for other situations and additional alternatives.
2. Plans shall reference this Standard for specific locations and shall note the zone and construction requirement, or provide details on the plans.
3. Sanitary sewer services crossing under water mains shall maintain 4" minimum clearance.
4. All pipe materials and installation shall be per City of Lodi Design Standards and Construction Specifications.

Dr. KT	No.	Date	Revision	Appr.	Approved By:	STD PLAN
Ch. WS					F. Wally Sandelin 12/28/00	415A
Date 12/00					F. Wally Sandelin, City Engineer, R.C.E. 39895 — Date	

CITY OF LODI

PUBLIC WORKS DEPARTMENT

Water Main Separation from Sanitary Hazard—New Water Main Construction

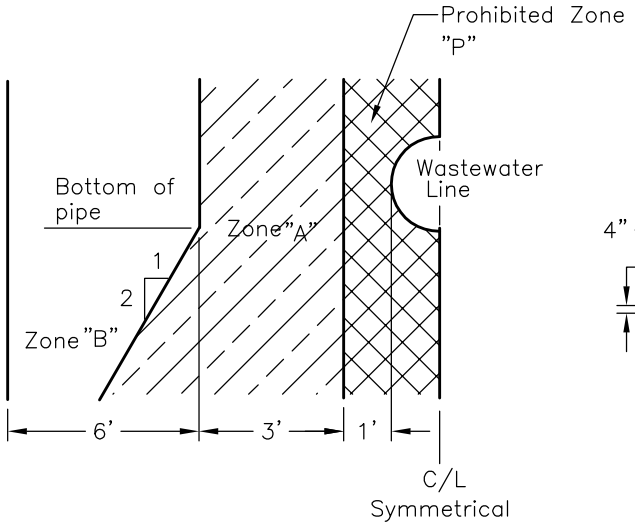

CASE 2
New Water Line
Parallel Construction

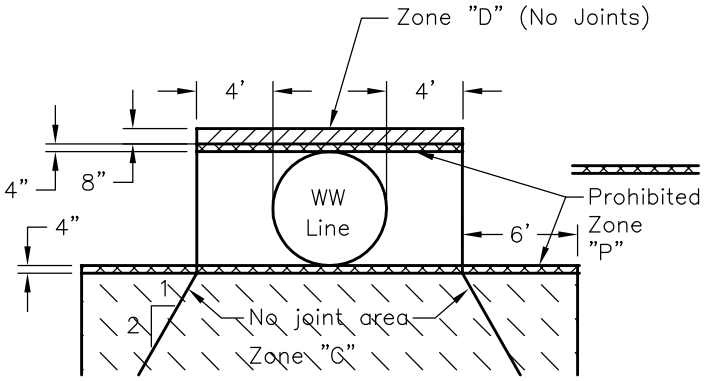

CASE 2
New Water Line
Crossing

WATER MAIN CONSTRUCTION REQUIREMENTS

ZONE

A	B	C	D	P
Requires specific approval of the City Engineer with details shown on the plans.	Pipe: Ductile Iron pipe; PVC, Class 200. Normal pipe standards apply if wastewater line meets Zone B requirements per Std. Plan 415A.	Pipe: Per Zone B Note "no joint" area under Wastewater line. Normal pipe standards apply if wastewater line meets Zone B requirements per Std. Plan 415A.	Pipe: Per Zone B No joint allowed. Normal pipe standards apply if wastewater line meets Zone B requirements per Std. Plan 415A.	Prohibited – No new watermains in this area.

Notes:

1. This Standard Plan shows normal construction requirements/options for reduced separation of new water mains from sanitary sewers (including services, see Note 3) and storm drains (including mains & laterals). It does not apply to pipes over 24 inches in diameter or to force mains. See State Dept. of Health Services Standards for other situations and additional alternatives.
2. Plans shall reference this Standard for specific locations and shall note the zone and construction requirement, or provide details on the plans.
3. Water mains crossing over services shall maintain 4" min. clearance.
4. All pipe materials and installation shall be per City of Lodi Design Standards and Construction Specifications.

Dr. KT	No.	Date	Revision	Appr.	Approved By:	STD PLAN
Ch. WS					F. Wally Sandelin 12/28/00 F. Wally Sandelin, City Engineer, R.C.E. 39895 — Date	415B
Date 12/00						

CITY OF LODI
PUBLIC WORKS DEPARTMENT

2" Fire Sprinkler Service

Establish for use of Copper Tubing Type K or G.I.P.

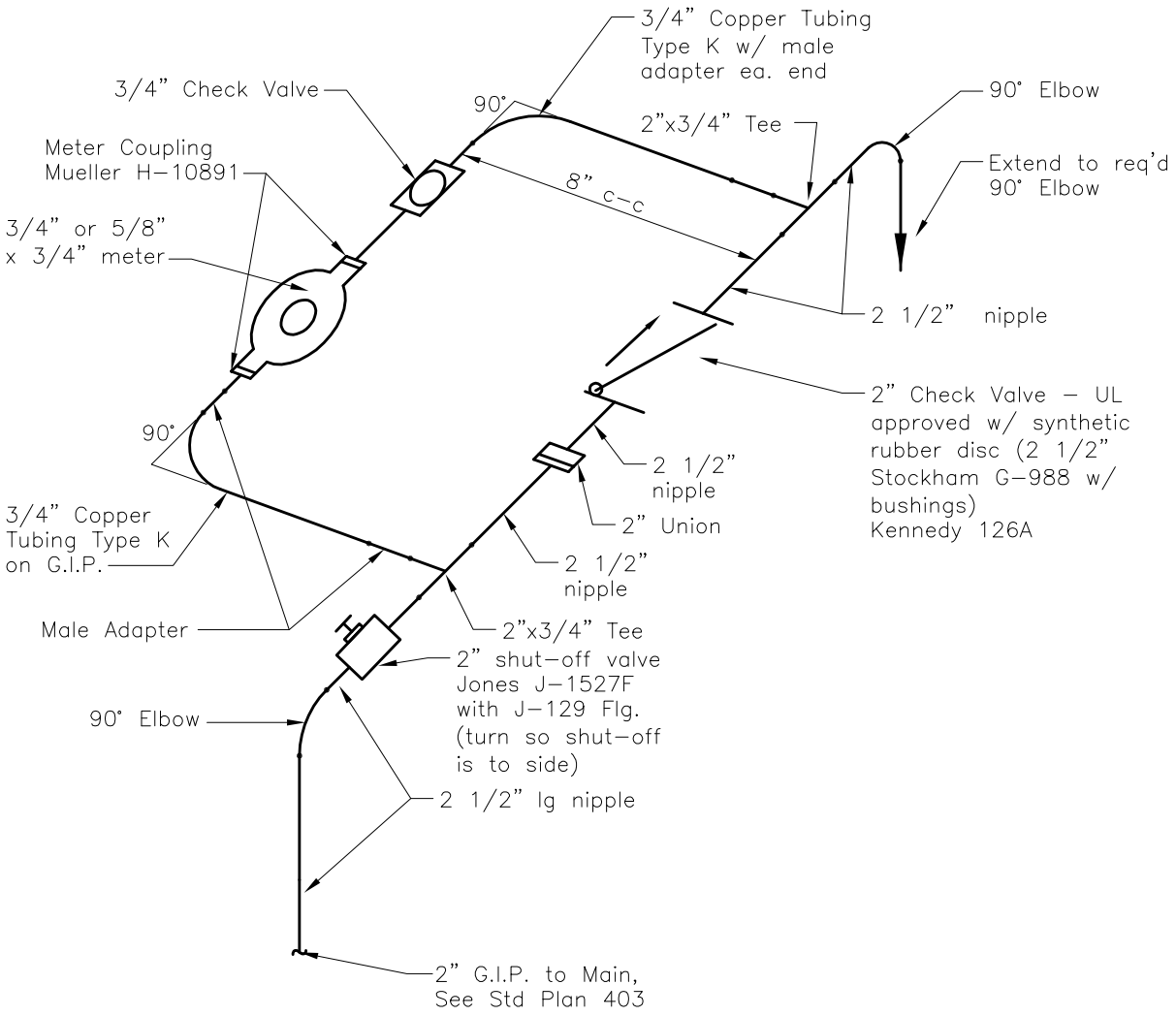

Notes:

1. Use Christy B-48 box with traffic lid per Std Plan 403. Center over fittings.
2. City service responsibility is from main to shut-off valve.
3. Meter to be Sensus SR. Support w/ brick.
4. Where Sprinkler system contains chemical additives or other possible contamination exists, Check Valves shown shall be replaced with Double Check Valve Assemblies per Std Plan 411.

Dr. KT	No.	Date	Revision	Appr.	Approved By:	STD PLAN
Ch. WS					F. Wally Sandelin 12/28/00	416
Date 12/00					F. Wally Sandelin, City Engineer, R.C.E. 39895 — Date	

CITY OF LODI

PUBLIC WORKS DEPARTMENT

WATER SAMPLING STATION

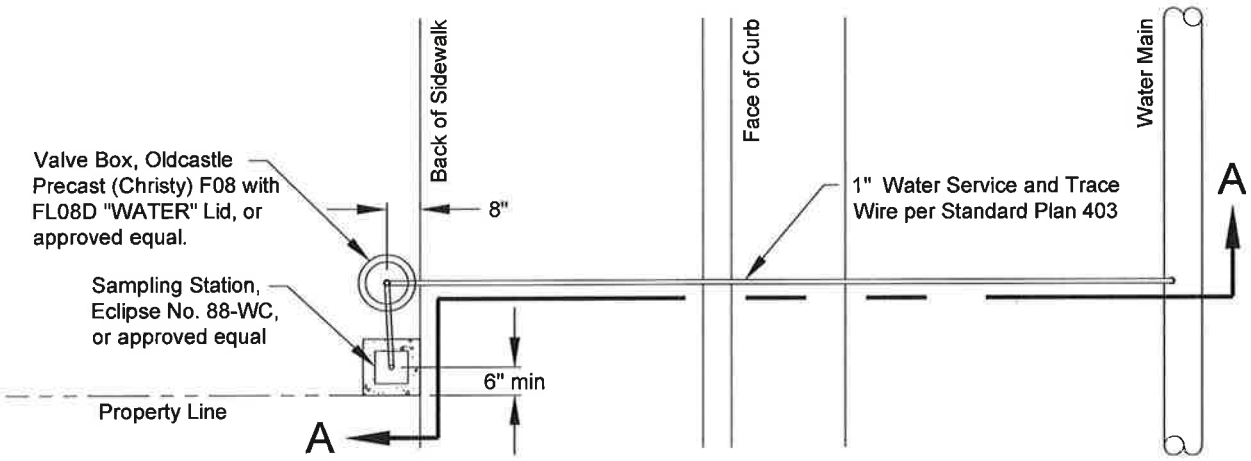

Plan View

Notes:
1. Backfill shall conform to Std. Plan 501.
2. All fittings shall comply with California No-Lead brass requirements.
3. Maintain 24" clearance between tap and any coupling, fitting or adjacent tap. Plastic services shall be looped approximately 6" vertically or laterally to provide slack in the line.

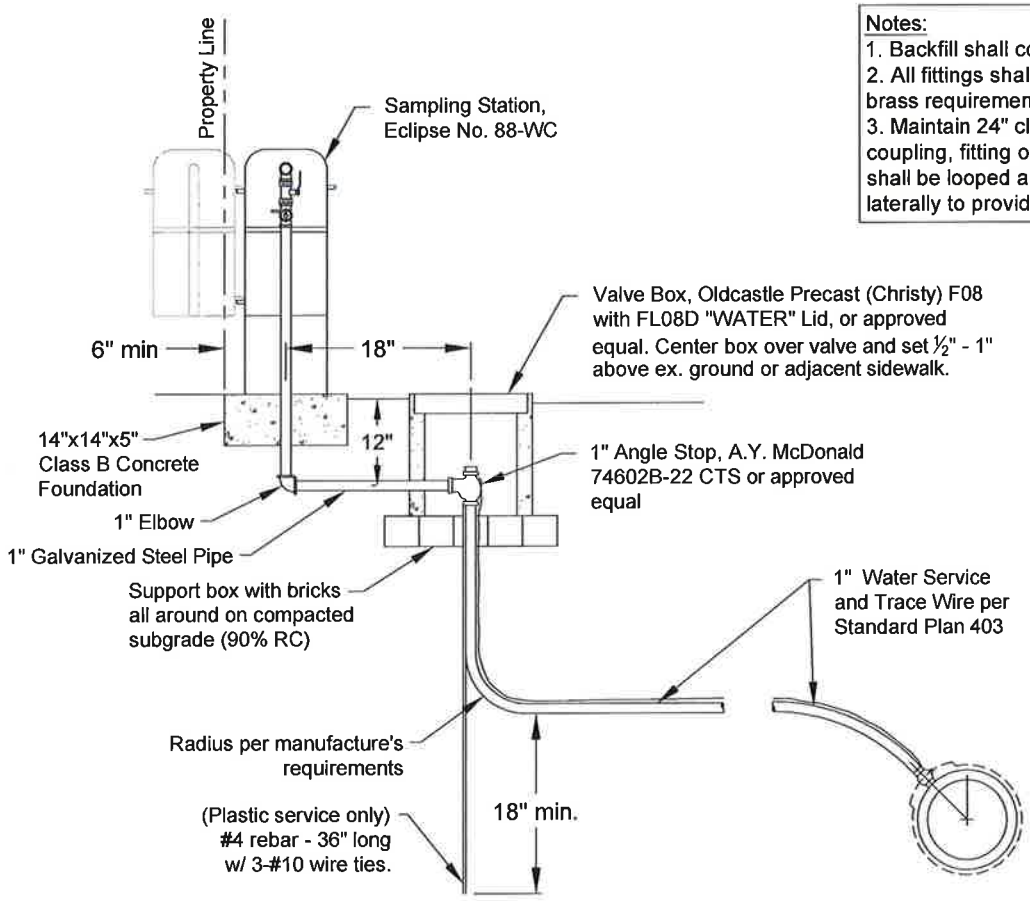

Section A-A

Dr. SN	No.	Date	Revision	Appr.	Approved By:	STD PLAN
Ch. LC					Charles Swimley, Deputy Public Works Director, R.C.E. 52842 — 9.11.13 Date	417
Date 9/13						

CITY OF LODI

PUBLIC WORKS DEPARTMENT

DUAL WATER SERVICE (DUPLEX)

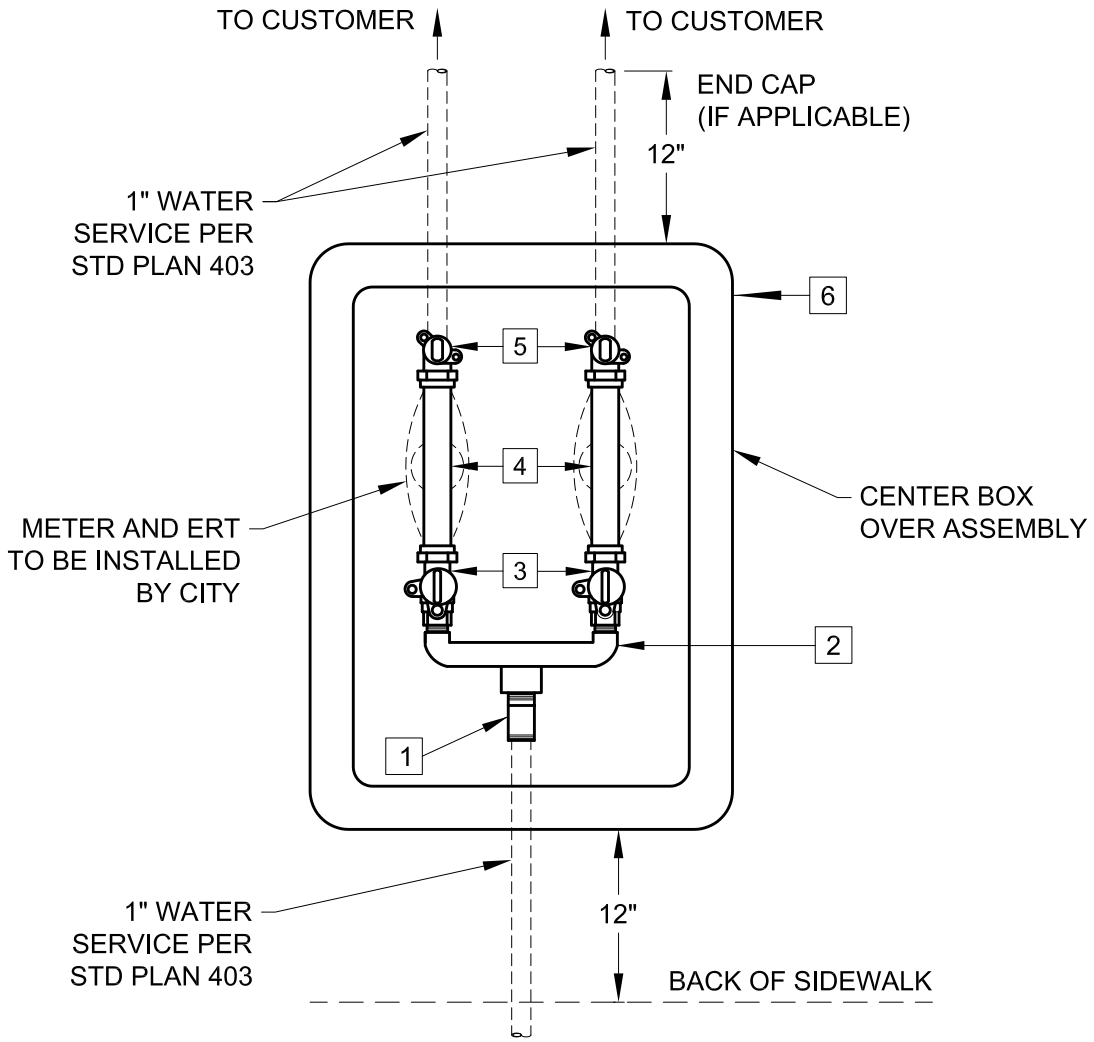

NOTE:
INSTALLATION OF THE METER BOX IN DRIVEWAY IS PROHIBITED WITHOUT PRIOR APPROVAL FROM CITY ENGINEER.

Dr. JP	No.	Date	Revision	Appr.	Approved By:	STD PLAN
Ch. LC					2/24/14	418
Date 1/27/14					Charlie Swimley — Date City Engineer / Deputy Public Works Director RCE No. 52842	

CITY OF LODI

PUBLIC WORKS DEPARTMENT

2" METER BYPASS FOR LARGE WATER SERVICE

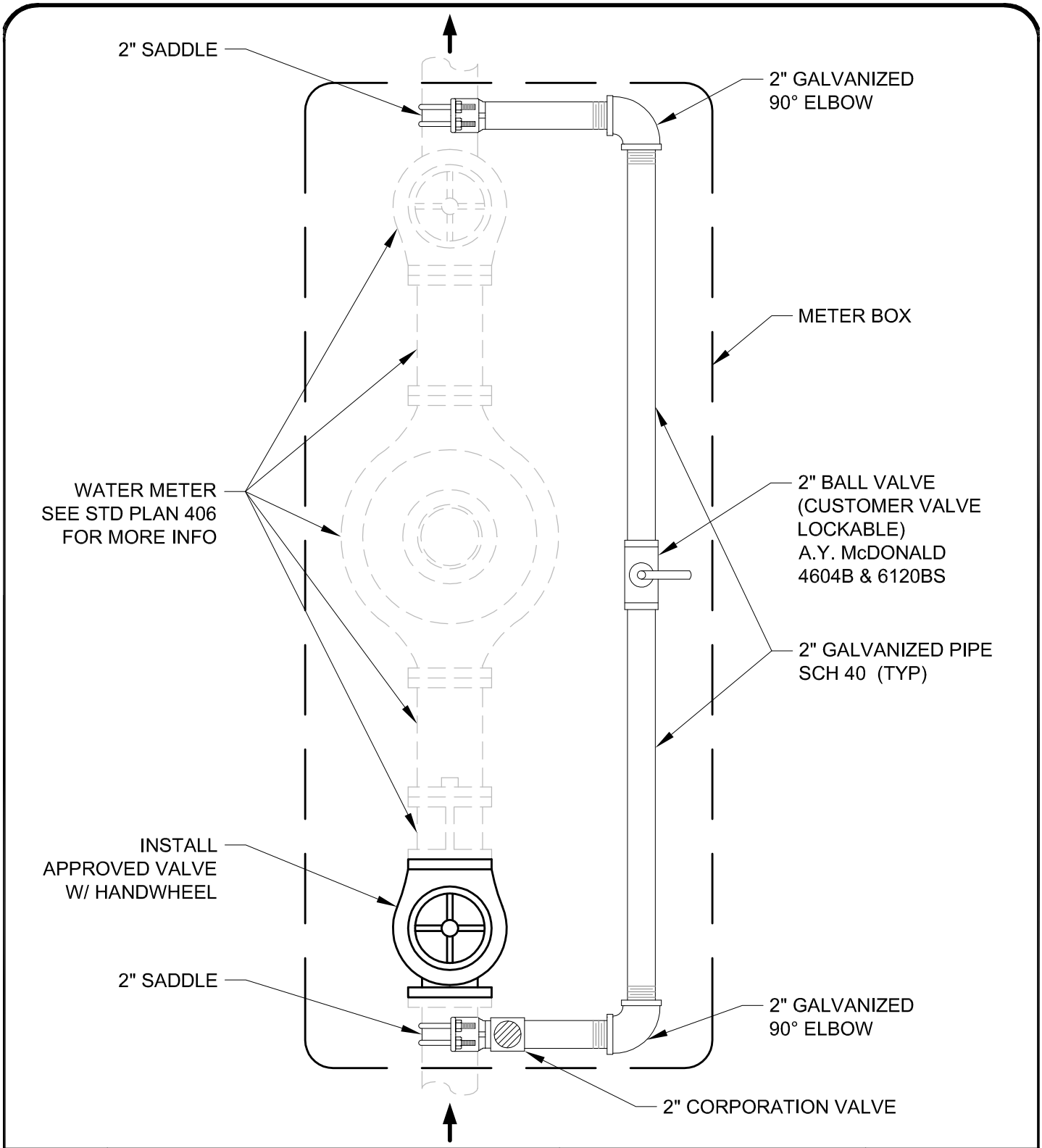

Dr. JP	No.	Date	Revision	Appr.	Approved By:	STD PLAN
Ch. LC					Lyman Chang, City Engineer, RCE No. 53149 — 3/2/17 Date	419
Date 3/2/17						

CITY OF LODI

PUBLIC WORKS DEPARTMENT

DUAL WATER SERVICE (DUPLEX)

MATERIAL LIST

	FITTING	SIZE	BASIC FEATURE	INLET CONNECTION	OUTLET CONNECTION	MANUFACTURER'S NOTE
1	METER COUPLING	1"	BRASS W/ NL LISTED	1" MNPT	3/4" MALE METER THREAD	McDONALD 74619 (3/4"x1"x2.18")
2	U-BRANCHES	1"	STANDARD U-BRANCH	1" MNPT	3/4" MNPT	McDONALD 709UFCW (1" x 3/4" x 6.5")
3	METER VALVE	1"	BALL VALVE WITH LOCKWING	1" PE CTS COMPRESSION	1" STRAIGHT THREAD SWIVEL NUT	McDONALD 76101MW (1" x 3/4" x 3/4")
4	METER SPOOL	1"x9"		1"	1"	1" SCH 80 PVC
5	CUSTOMER VALVE ANGLE STOP	1"	FULL PORT ANGLE BALL VALVE	METER SWIVEL NUT	1" FIPT	McDONALD 74604B WITH HANDLE #6120B
6	SERVICE BOX		LID TO READ WATER	N/A	N/A	CHRISTY B36 BOX W/ FL36D FIBRELYTE LID

Dr. JP	No.	Date	Revision	Appr.
Ch. LC				
Date 1/23/14				

Approved By:

2/24/14

Charlie Swimley — Date

City Engineer / Deputy Public Works Director

RCE No. 52842

STD PLAN

418

CITY OF LODI

PUBLIC WORKS DEPARTMENT

Pipe Bedding & Backfill- Flexible Pipe Trench Section

Pipe Size	Min. "W"
4"	18"
6"	18"
8"	24"
10"	24"
12"	30"
15"	30"

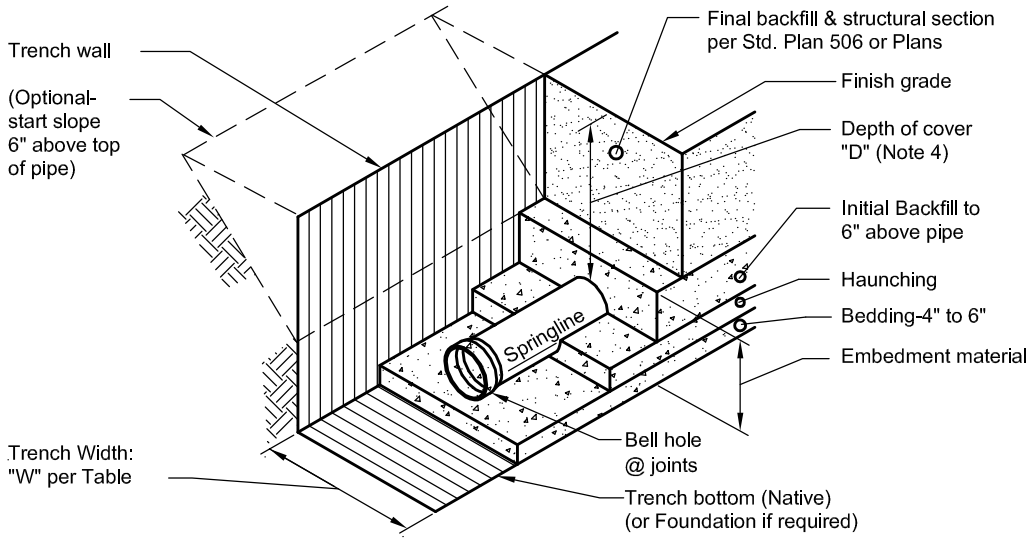

Notes:

1. This Std is for PVC SDR 35 (4" thru 15" dia), C900, & ductile iron pipe (up thru 14" dia) conforming to City Design Standards and Construction Specifications.
2. Class 1 embedment material shall be used unless specified otherwise on the plans.
3. This Std applicable only for stable trench walls where no standing water or groundwater is anticipated. Special details required for unstable soil identified in soils report. For minor occurrences of instability (sand pockets, etc), voids in the embedment zone shall be filled with the specified embedment material to at least two pipe diameters all around the pipe.
4. Minimum depth of cover for mains is 3 ft to finish grade; service laterals per plans.
5. For Water Pipes use native material for backfill.

EMBEDMENT MATERIAL

	CLASS I	CLASS II	CLASS III	CLASS IV	CLASS V
Description USC Soil Type	Class II AB or Clean Sand	Coarse Sand & Gravel GW, GP, SW, SP	Fine Sand Mixtures GM, GC, SM, SC	Silt,Silty Clays MH, ML, CH, CL	Organic Soils OL, OH, PT
Foundation	If required, per special design to be shown on plans				
Bedding	Consolidate with vibrator or flat shovel "slicing" (See Note 5)	Compact to 85% Min. R.C.	Compact to 90% Min. R.C.	Special Design	Not Permitted
Haunching		Cut-off dam (per Note 5)	Compact to 90% Min. R.C. in two lifts		
Initial Backfill	Class II AB	Compact to 85% Min. R.C. in two lifts	Compact to 90% Min. R.C, in two lifts		
Maximum Depth of Cover "D" (without special design)	20 ft	20 ft	20 ft		

Dr. JP	No.	Date	Revision	Appr.
	1	9/03	ADDED C900 PIPE	
Ch. LC	2	8/13	REMOVE CRUSHED ROCK MATERIAL	
Date 8/13				

Approved By:

Charlie Swimley
City Engineer / Deputy Public Works Director
RCE NO. 52842

8/19/13
Date

STD PLAN

501A

CITY OF LODI

PUBLIC WORKS DEPARTMENT

Pipe Bedding & Backfill- Rigid Pipe Trench Section

Legend:

D=Nominal pipe inside diameter (in.)
Bc=Pipe outside diameter (in.)
Bd=Trench width @ top of pipe=Bc+8" min. each side (24" total minimum)

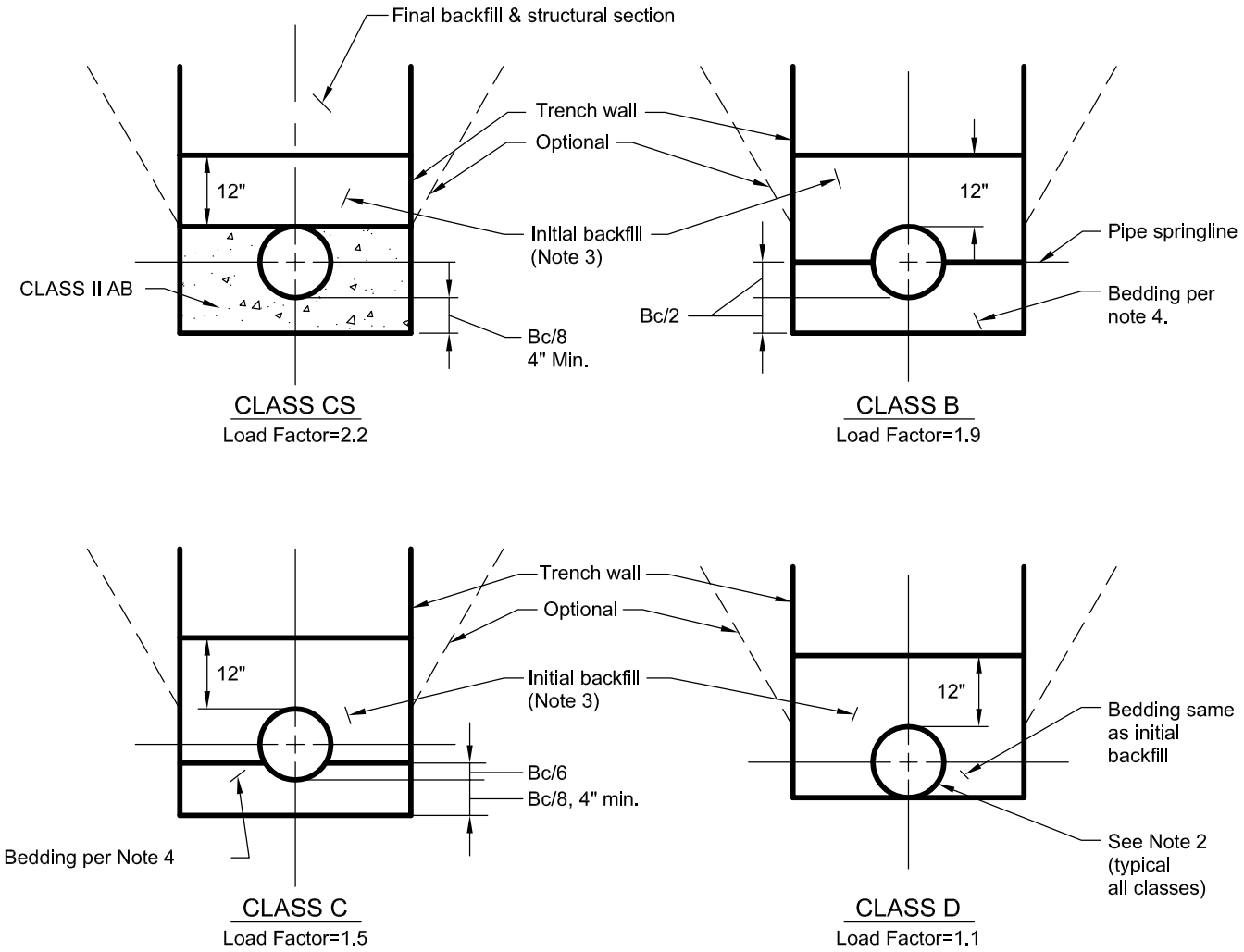

Notes:

1. This Standard is for rigid pipes 4" & larger; conforming to City Design Stds and Construction Specifications. Use Trench Class as shown on the plans; if not specified, use appropriate class per pipe material and depth of cover per Std Plan 501C.
2. Provide uniform & continuous support of pipe barrel between bell or coupling holes.
3. Initial backfill shall be selected sandy material per Construction Spec. Sect.6-19.02 @ 90% R.C. min.
4. Class B & C bedding material to be Class II AB or sand as specified on the plans.

Dr. JP	No.	Date	Revision	Appr.
	1	6/00	ADDED C900 PIPE	
Ch. LC	2	8/13	REMOVE CRUSHED ROCK MATERIAL	
Date 8/13				

Approved By:

Charlie Swimley
City Engineer / Deputy Public Works Director
RCE NO. 52842

8/19/13
Date

STD PLAN

501B

CITY OF LODI

PUBLIC WORKS DEPARTMENT

Pipe Bedding & Backfill– Rigid Pipe Bedding Requirements

Pipe Material	Class	Size (in.)	Minimum Trench Class per Std Plan 501B Depth of Cover (ft.) 3	4	5	6	7	8	9	10
Asbestos Cement, AWWA C401	150	4 thru 14	D							
Non–Reinforced Concrete, ASTM C–14	2	12	D			C			B	
		15								
		18								CS
		21								
		24								
	3	12	D				C			B
		15								
		18								
		21								
		24								
Reinforced Concrete, ASTM C–76	III	12	C				B			CS
		15								
		18								
		21	D							
		24								
		27								
		30								
	IV	12	D					C		
		15								
		18								
		21								
		24								
		27								
		30								
	V	12	D							
		15								
		18								
		21								
		24								
		27								
		30								
Vitrified Clay Pipe, ASTM C700 Extra Strength		4	D							
		6								
		8								C
		10								
		12								
		15								

Dr. KT	No.	Date	Revision	Appr.
Ch. WS				
Date 7/08				

Approved By: F. Wally Sandelin, City Engineer, R.C.E. 39895 — 9/25/02 Date

STD PLAN 501C

CITY OF LODI

PUBLIC WORKS DEPARTMENT

Standard Abbreviations

Aggregate base	AB
American Society for Testing and Materials	ASTM
American Water Works Association	AWWA
Approximately	APPROX
Asbestos cement pipe	ACP
Asphalt concrete	AC
Back of walk	BOW
Begin curb return	BCR
Begin curve	BC
Begin vertical curve	BVC
Bench mark monument	BM
Blow off	BO
Cable Television	CATV
Cast iron pipe	CIP
Centerline	C/L
Center to Center	C–C
Centimeter	cm
Central angle	△
Central California Traction Company	CCTC
City of Lodi	COL
Class	CL
Cleanout	CO
Commercial driveway	COMM DWY
Compacted Original Ground	COG
Concrete	CONC
Concrete pipe	CP
Construct	CONST
Corrugated metal pipe	CMP
Cubic feet per second	CFS
Cubic yards	CY
Curb & gutter	C&G
Curb, gutter & sidewalk	CG&S
Diameter	DIA
Distance	DIST
Driveway	DWY
Drop inlet catch basin	DICB
Ductile Iron	DIP
Each	EA
Edge of pavement	EP
Electric	ELEC
Elevation	ELEV
End curb return	ECR
End curve	EC
End vertical curve	EVC
Existing	EX
Feet per Second	FPS
Finish grade	FG
Fire Hydrant	FH
Flowline	FL
Fire Service	FS
Face of Curb	FOC
Foot	FT
Gas	G
Galvanized	GALV
Gallons per Minute	GPM
Gas valve	GV
Global Positioning System	GPS
Grade Break	GB
Guy pole	GP
High point	HP
High pressure gas	HPG
Horizontal	HOR
Inch	IN.
Industrial waste	IW
Inside diameter	ID
Invert	INV
Joint use pole	JP
Kilometer	Km
Length	L
Lineal feet	LF
Low proint	LP
Low pressure gas	LPG
Lump sum	LS
Manhole	MH
Maximum	MAX
Meter	M
Millimeter	mm
Minimum	MIN
Miscellaneous	MISC
North, South, East, West	N,S,E,W
Northerly, etc.	N'LY
Original ground	OG
Outside Diameter	OD
Parking meter	PM
Pavement	PVMT
Pedestrian	PED
Point of intersection	PI
Point of reverse curve	PRC
Portland Cement Concrete	POC
Point on tangent	POT
Polyvinylchloride	PVC
Pothole	PH
Power poles	PP
Property line	P/L
Public utility easement	PUE
Pull box	PB

Sheet 1 of 2

Dr. KT	No.	Date	Revision	Appr.
Ch. WS	1	6/03	ALL ABBREVIATIONS REVIEWED	
Date 12/00				

Approved By: F. Wally Sandelin 9/25/02

F. Wally Sandelin
City Engineer
R.C.E. 39895

Date

STD PLAN

502

CITY OF LODI

PUBLIC WORKS DEPARTMENT

Standard Abbreviations

Radius	R
Rehabilitate	REHAB
Reinforce,(ed), (ing)	REINF
Reinforced concrete pipe	RCP
Relative compaction	RC
Remote control valve	RCV
Residential driveway	RES DWY
Right of way	R/W
Rubberized Hot Asphalt Concrete	RHAC
Sheet	SHT
Side inlet catch basin	SICB
Sidewalk	SWK
Southern Pacific Railroad	SPRR
Specification	SPEC
Sprinkler head	SH
Square feet	SF
Square type	SQ TYPE
Standard	STD
Station	STA
Storm Drain	SDMH
Storm Drain Manhole	SD
Street Name Sign	SNS
Street light conduit	SL
Subdivision	SUBD
Survey Monument	MON
Tangent	T
Telephone (underground)	TEL
Telephone pole	TP
Top of curb	TOC
Traffic signal conduit	TS
Tree well	TW
Typical	TYP
Underground Service Alert	USA
Underground Utility Vault	UUV
Union Pacific Railroad	UPRR
Vertical curve	VC
Vitrified clay pipe	VCP
Wastewater	WW
Wastewater Manhole	WWMH
Wastewater service	WWS
Water	W
Water service	WS
Water service box	WSB
Water valve	WV
Weakened plane joint	WPJ
Woodbridge Irrigation Dist	WID
Yard	YD

Dr. KT	No.	Date	Revision	Appr.
	1	9/03	ALL ABBREVIATIONS REVIEWED	
Ch. WS				
Date 12/00				

Approved By: F. Wally Sandelin, City Engineer, R.C.E. 39895 — 9/25/02 Date

STD PLAN 502

CITY OF LODI

PUBLIC WORKS DEPARTMENT

DRAFTING SYMBOLS

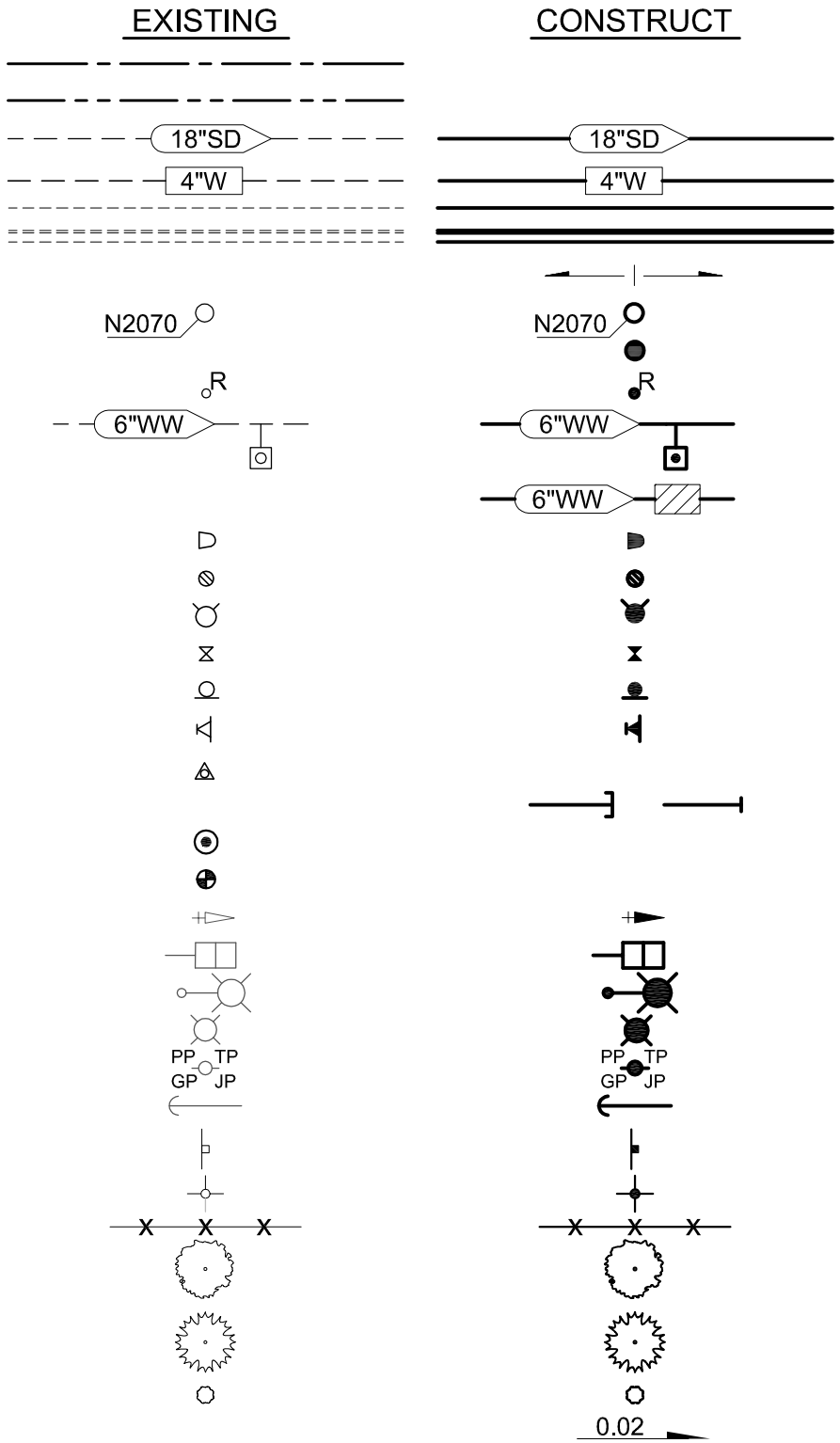

- Centerline
- Right-of-Way / Property Line
- SD, WW or IW (noted) with direction
- W or Other Underground Utilities
- C,G & S
- High Point in Flow Line
- Manhole W/ Manhole Number
- Rehab Ex Manhole
- Riser
- WW Cleanout
- Point Repair
- Side Inlet Catch Basin
- Drop Inlet Catch Basin
- Fire Hydrant
- Water Valve
- Blow-off
- Reducer
- Water Service Shutoff
- Cap & Blind Flange
- Centerline Survey Monument
- City of Lodi Bench Mark
- Traffic Signal Head
- Pedestrian Head
- Electrolier (mast. arm type)
- Electrolier (concrete standard)
- Utility Pole (type as noted)
- Guy Anchor
- Sign (type as noted)
- Street Name Sign
- Fence (type as noted)
- Deciduous & other Leafed Trees
- Pine, Fir or Cedar Trees
- Hedge or Bush
- Slope of Pipe

Dr. KT	No.	Date	Revision	Appr.
Ch. WS	1	7/01	UPDATE PER FIRST REVISION	
Date 11/08	2	9/03	REVISED SICB SYMBOL	
	3	11/08	REVISED WW CLEANOUT	

Approved By:

F. Wally Sandelin
City Engineer
R.C.E. 39895

9/25/02
Date

STD PLAN

503

CITY OF LODI

PUBLIC WORKS DEPARTMENT

Pipe Marker

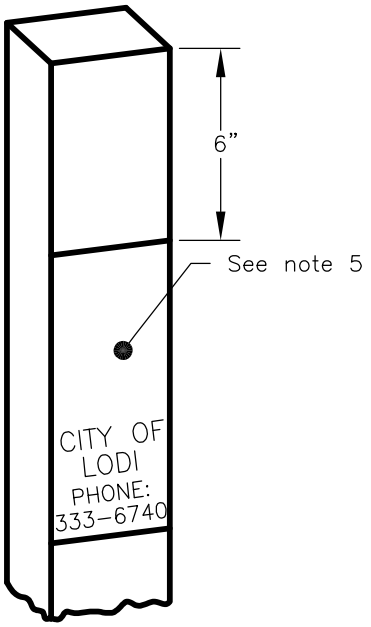

DETAIL A

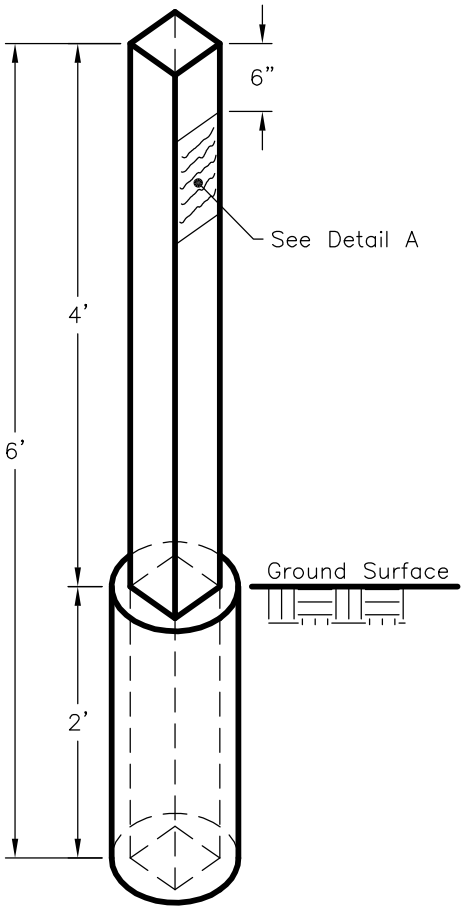

Notes:

1. Posts to be 4"x4" foundation grade Redwood or pressure treated Douglas Fir
2. Posts to be encased in concrete – 8" diameter x 2' deep
3. Posts shall be painted white using 2 coats
4. Use 1/2" block black lettering on both sides of the post in line with the pipe
5. Posts shall state diameter and type of pipe as follows:

   Examples: 1) 8–INCH WATER MAIN 2) 24–INCH WASTE WATER 3) 12–INCH STORM DRAIN

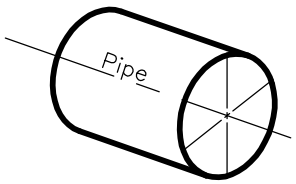

Dr. KT	No.	Date	Revision	Appr.	Approved By:	STD PLAN
Ch. WS					F. Wally Sandelin 12/28/00	505
Date 12/00					F. Wally Sandelin, City Engineer, R.C.E. 39895 — Date	

CITY OF LODI

PUBLIC WORKS DEPARTMENT

Trench Structural Section Requirements

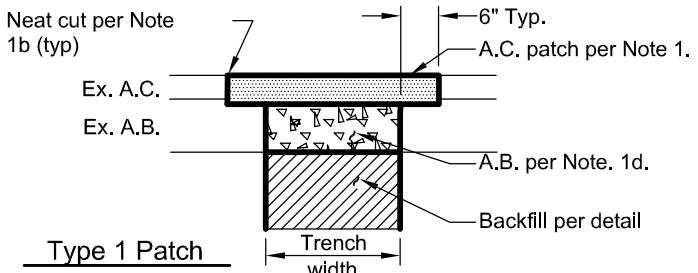

Type 1 Patch

(Standard, unless Type 2 or 3 is specified)

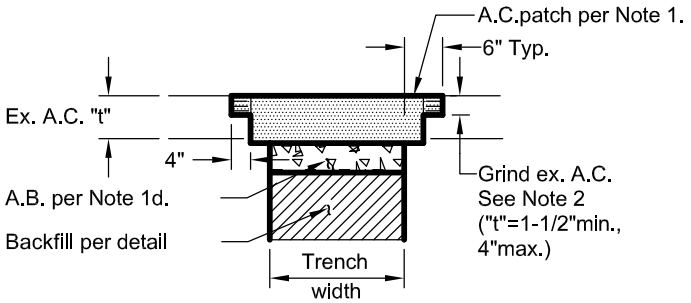

Type 2 Patch

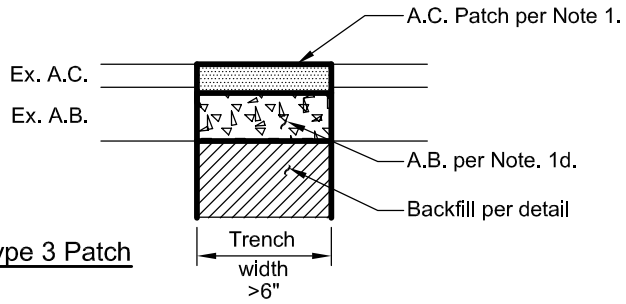

Type 3 Patch

PAVEMENT REPLACEMENT

Backfill:
Native material @ 90% R.C. except approved select material or A.B. Cl. 2 @ 95% required for:
a.) Type 2 patch
b.) Excavation smaller than 3'x3'

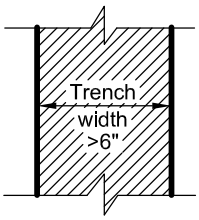

Pipe bedding per Std Plan 501

BACKFILL

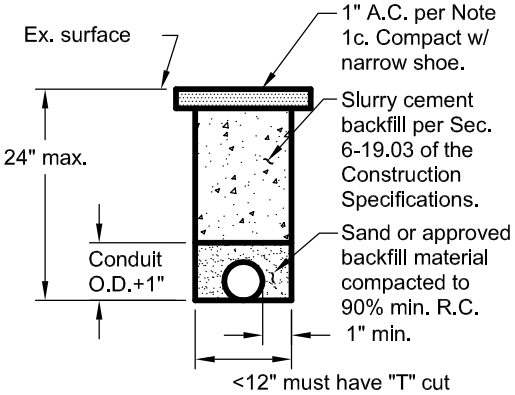

3" & Smaller Conduit

(Wheel Cut Trench)

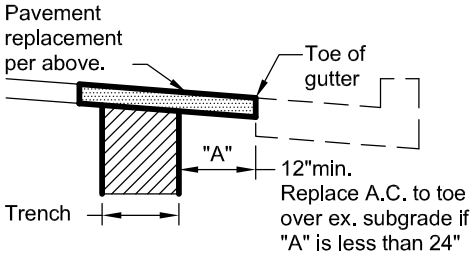

Adjacent to Gutter

SPECIAL CASES

Notes:

1. Type 1 Patch:
   a) Total AC thickness to match existing plus 1", 4" minimum applied in two lifts.
   b) Drop hammer or other rough cut allowed for initial cut along trench wall. Final AC removal per Sec. 6-15.02 "Removal Method" of the Construction Specification.
   c) AC replacement per Sec. 6-39.04 "Trench Replacement and Shoulder Paving" of the Construction Specifications.
   d) AB thickness per Plans. AB may be replaced by additional AC (50% of req'd AB thickness).
2. Type 2 patch optional, except when required by the City. Grind depth "t" shall be adjusted to match existing overlay thickness.
3. Type 3 Patch to be used when shown on the plans or as approved by the Engineer, generally on streets to be overlayed.
4. Controlled density fill (CDF) may be used for backfill with the prior approval of the Engineer.

Dr. KT	No.	Date	Revision	Appr.	Approved By:	STD PLAN
	1	9/03	REVISED AB PATTERN		F. Wally Sandelin, City Engineer, R.C.E. 39895 — 9/25/02 Date	506
Ch. WS						
Date 12/00						

CITY OF LODI

PUBLIC WORKS DEPARTMENT

Joint Trenching Details

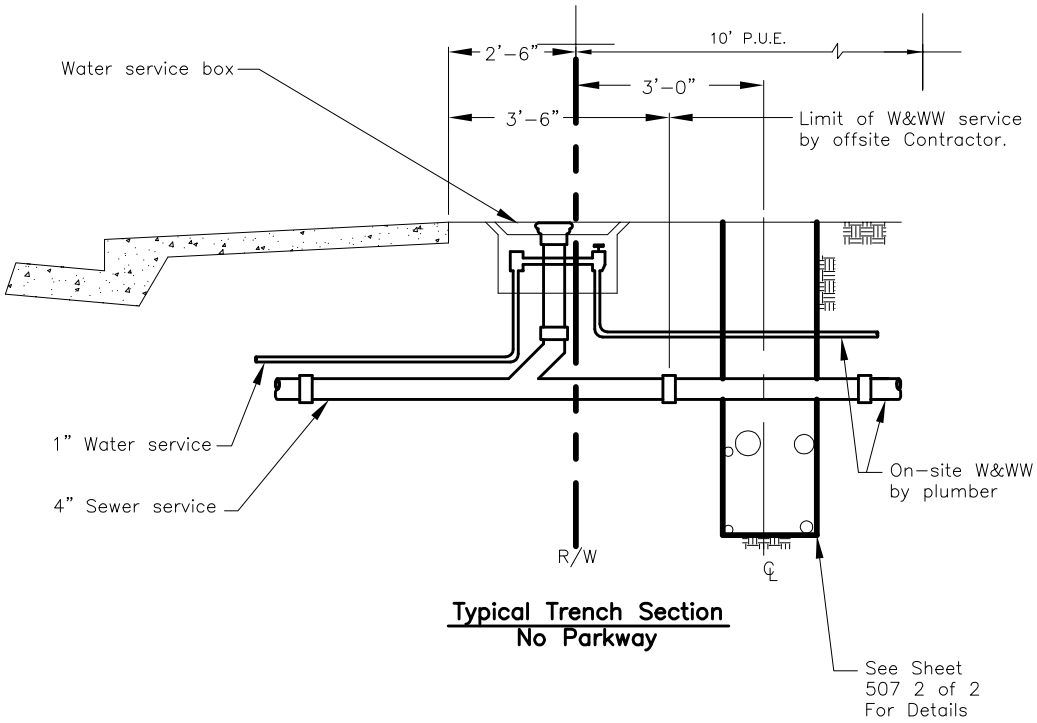

Typical Trench Section
No Parkway

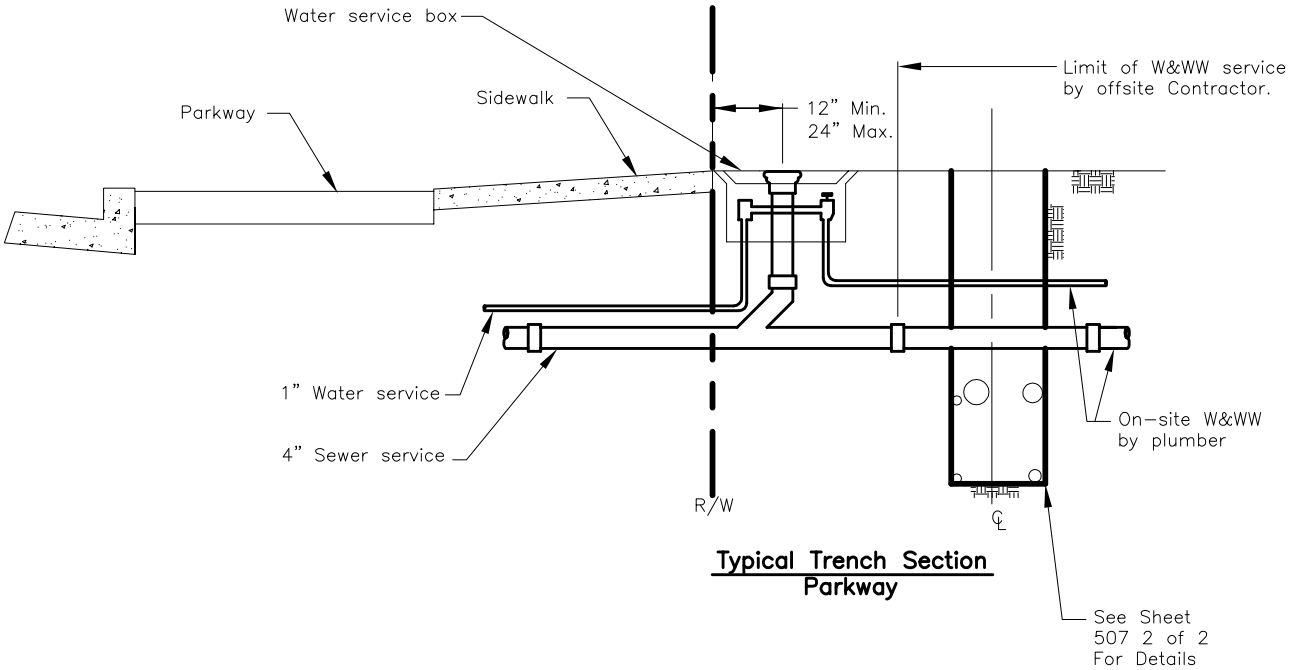

Typical Trench Section
Parkway

Note:
1. Also See Std Plans 201, 203, 403, & 414.

Dr. KT	No.	Date	Revision	Appr.
Ch. WS	1	9/03	ADDED PARKWAY LAYOUT	
Date 12/00				

Approved By: F. Wally Sandelin 9/25/02
F. Wally Sandelin
City Engineer
R.C.E. 39895
Date

STD PLAN
507

CITY OF LODI

PUBLIC WORKS DEPARTMENT

Joint Trenching Details

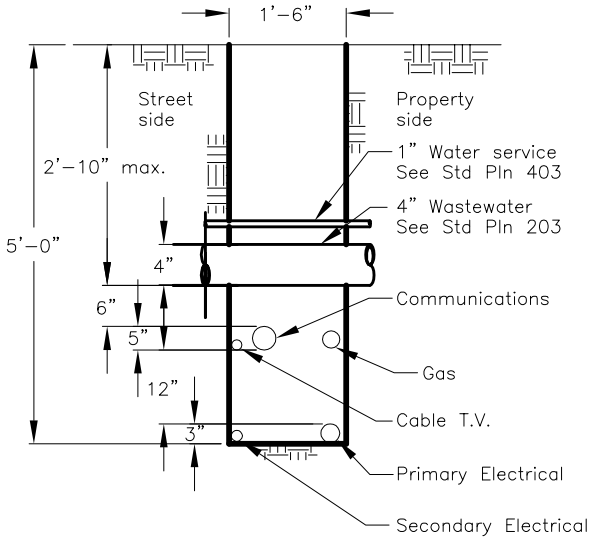

Trench Section

Electric, telephone, and cable T.V. boxes to be set as determined by each agency in the 10' P.U.E.

Dr. KT	No.	Date	Revision	Appr.
Ch. WS	1	9/03	ADDED PARKWAY LAYOUT	
Date 12/00				

Approved By: F. Wally Sandelin 9/25/02

F. Wally Sandelin
City Engineer
R.C.E. 39895

Date

STD PLAN

507

CITY OF LODI

PUBLIC WORKS DEPARTMENT

Standard Utility Locations In Streets

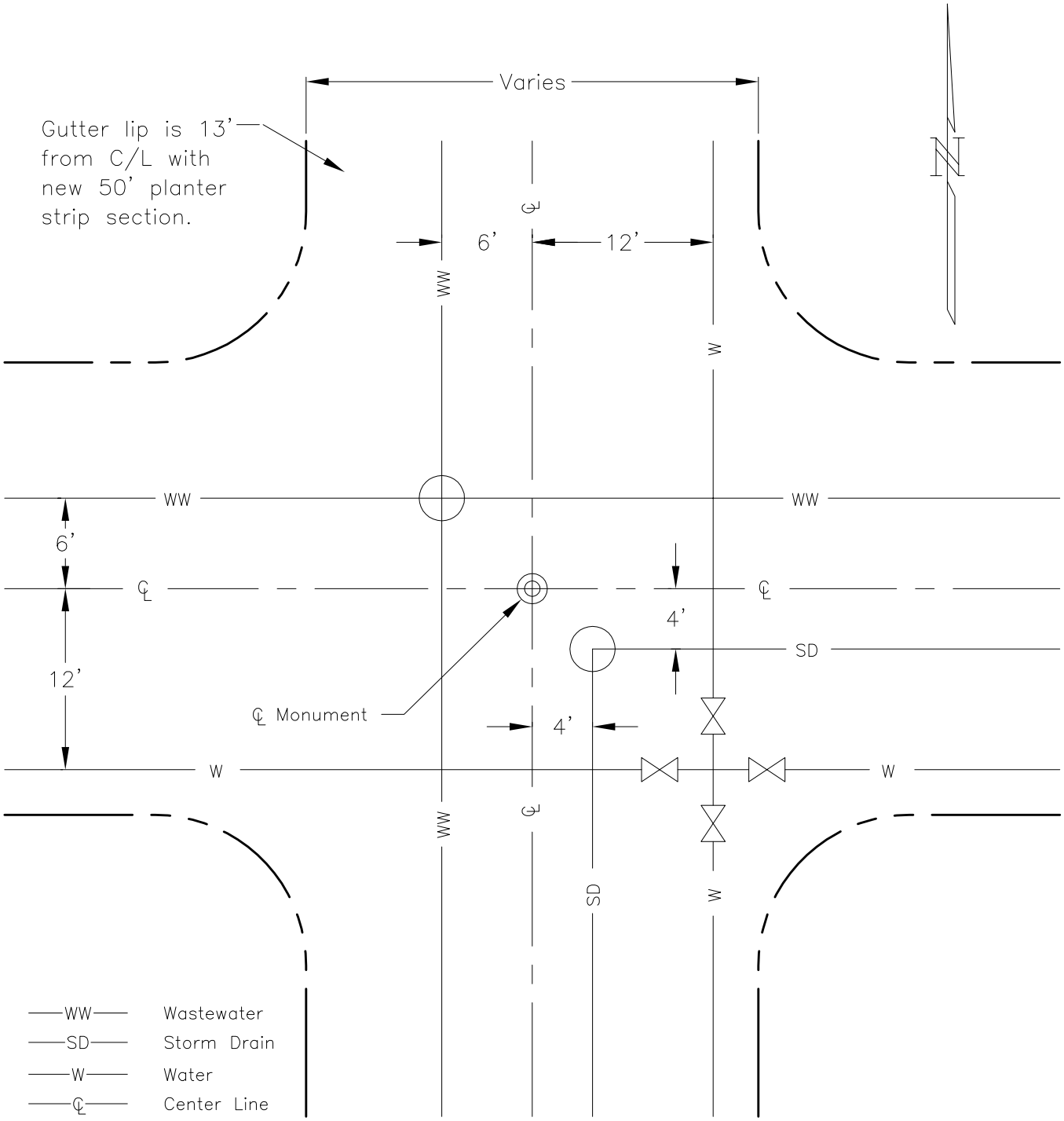

Dr. KT	No.	Date	Revision	Appr.	Approved By:	STD PLAN
Ch. WS					F. Wally Sandelin 12/28/00	601
Date 12/00					F. Wally Sandelin, City Engineer, R.C.E. 39895 — Date	

CITY OF LODI

PUBLIC WORKS DEPARTMENT

Standard Utility Locations In Easements/ Private Streets

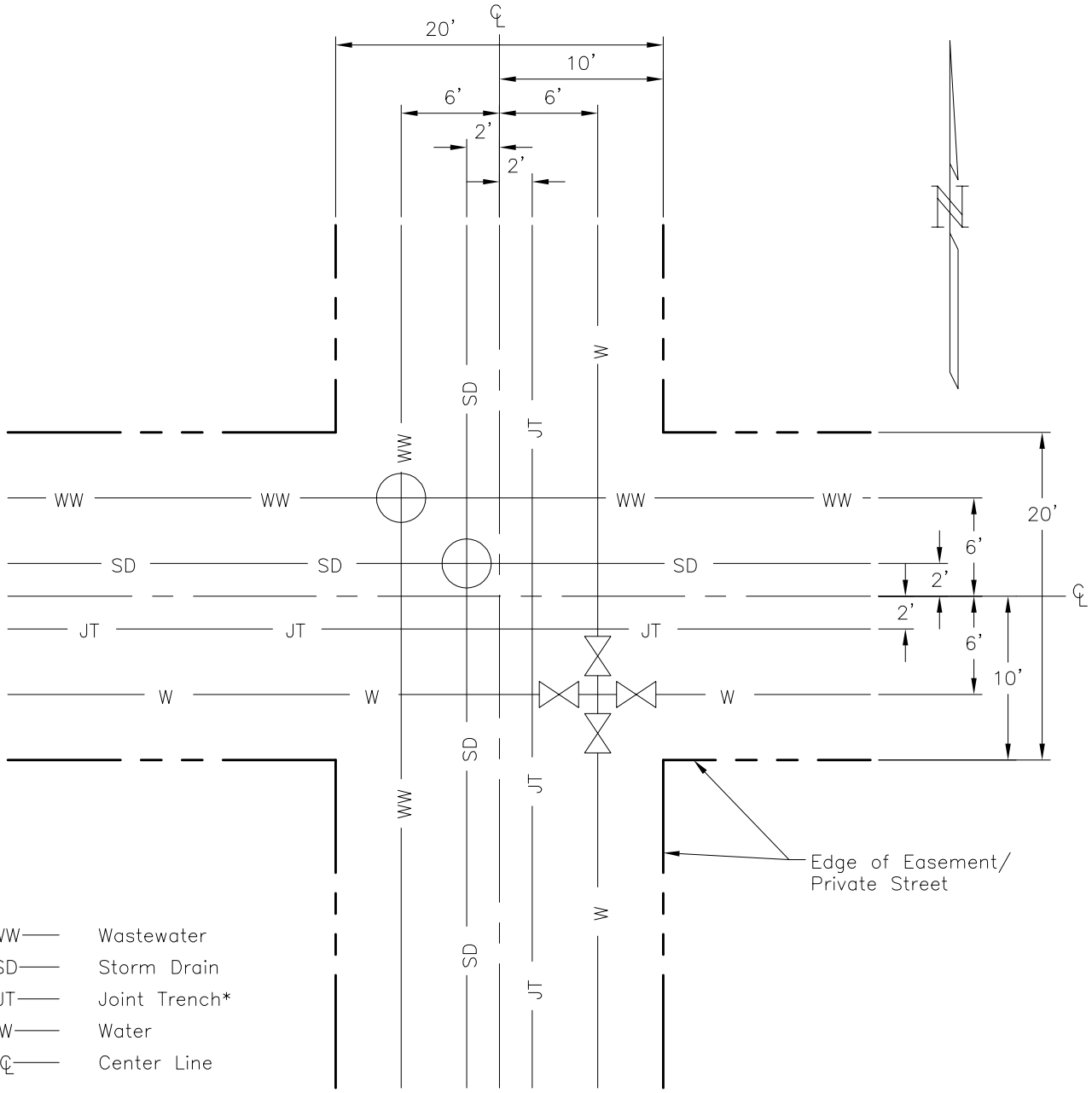

—WW— Wastewater
—SD— Storm Drain
—JT— Joint Trench*
—W— Water
—℄— Center Line

* See Std Plan 507 for Details

Notes:

Private utilities to be located outside of limits shown unless otherwise approved by the Public Works Department.

Dr. KT	No.	Date	Revision	Appr.	Approved By:	STD PLAN
Ch. WS					F. Wally Sandelin 12/28/00	602
Date 12/00					F. Wally Sandelin, City Engineer, R.C.E. 39895 — Date	

CITY OF LODI

PUBLIC WORKS DEPARTMENT

Street Name Sign Location

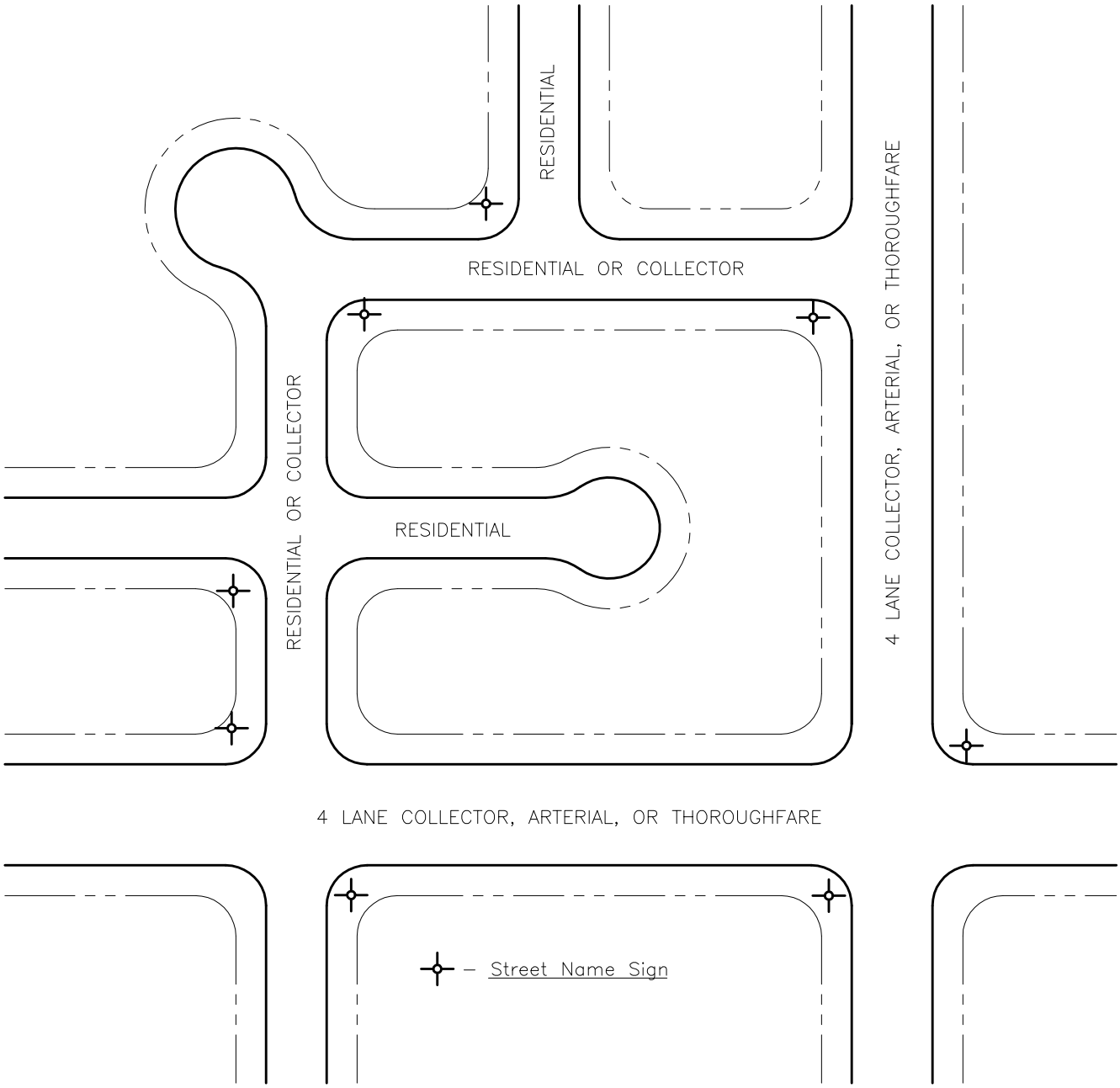

- Place one (1) street sign at the intersection of two RESIDENTIALS.
- Place two (2) street signs at the intersection of a RESIDENTIAL or COLLECTOR with a 4 LANE COLLECTOR, ARTERIAL, or THOROUGHFARE.
- Place two (2) street signs at the intersection of any two 4 LANE COLLECTORS, ARTERIALS, or THOROUGHFARES or any combination thereof.

Dr. KT	No.	Date	Revision	Appr.	Approved By:	STD PLAN
Ch. WS					F. Wally Sandelin 12/28/00	603
Date 12/00					F. Wally Sandelin, City Engineer, R.C.E. 39895 — Date	

CITY OF LODI

PUBLIC WORKS DEPARTMENT

Title Block For Private Engineers

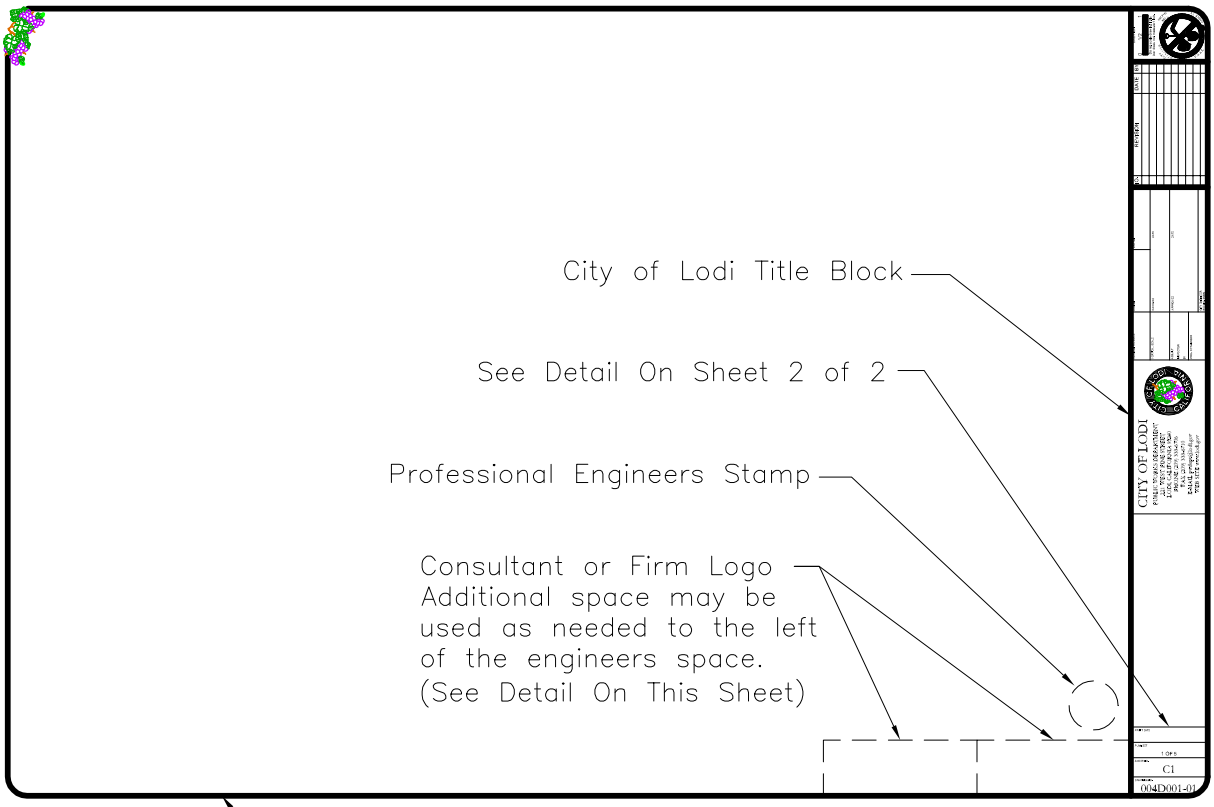

Standard City of Lodi Drawing Sheet 22"x34" or 24"x36"

4"

1-1/2"

Prepared in the office of:

Designed under the supervision of:

_____ RCE _____

Sheet 1 of 2

Dr. KT	No.	Date	Revision	Appr.
	1	9/03	NEW TITLE BLOCK	
Ch. WS	2	2/04	ADDED SHEET 2	
Date 12/00				

Approved By: F. Wally Sandelin, City Engineer, R.C.E. 39895 — 2/12/04 Date

STD PLAN 604

CITY OF LODI

PUBLIC WORKS DEPARTMENT

Title Block For Private Engineers

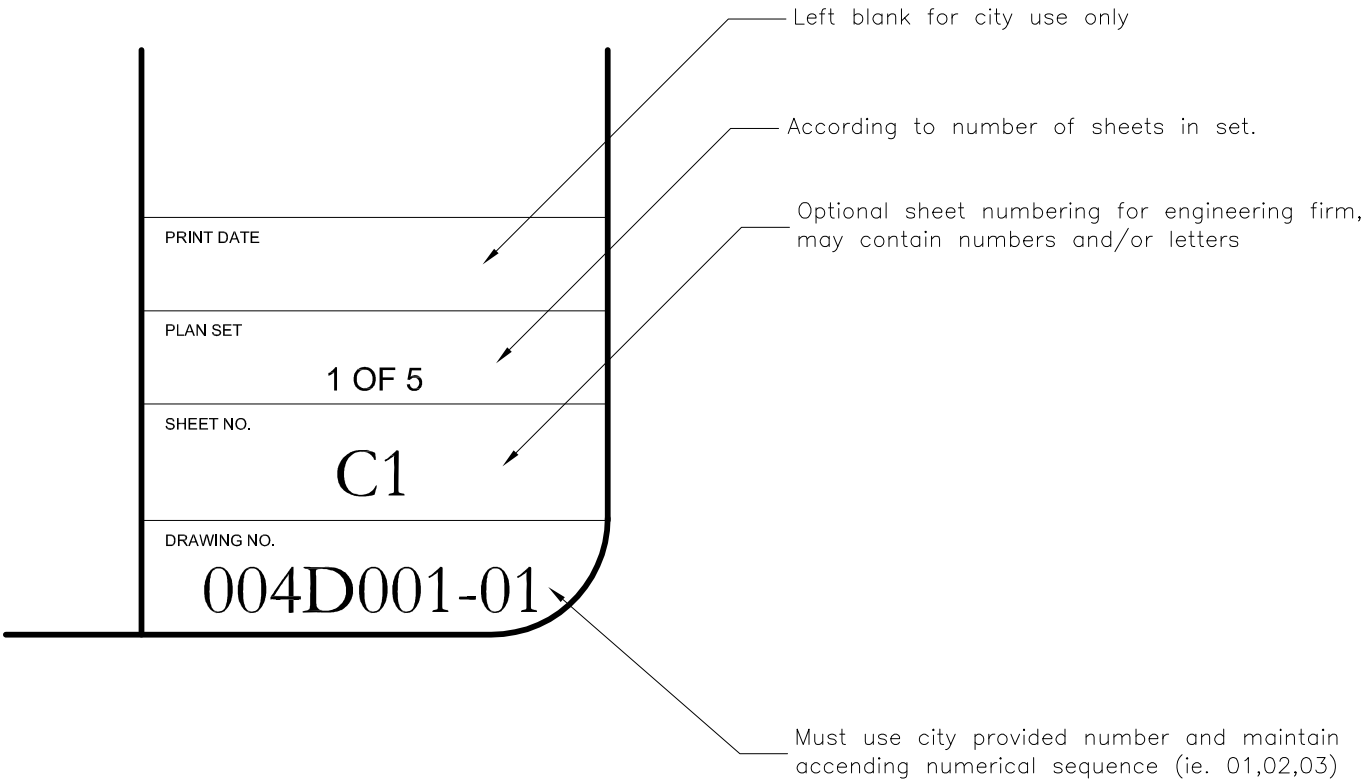

Notes:

1. All work for the City of Lodi shall use this standard.
2. All sheets within a set shall be the same size.
3. City of Lodi shall provide original drawing numbers, And all sets shall be numbered according to the number of sheets in the set.
4. City of Lodi will provide title blocks in AutoCAD format upon request.
5. Plans shall also conform to the City of Lodi Public Improvement Design Standards section 5 & appendix A.
6. If plans are to be reduced to a half scale set, 22" x 34" sheets size must be used.

Sheet 2 of 2

Dr. GWC	No.	Date	Revision	Appr.	Approved By:	STD PLAN
Ch. WS	1	2/04	ADDITION OF SHEET 2		F. Wally Sandelin, City Engineer, R.C.E. 39895 — 2/12/04 Date	604
Date 2/04						

CITY OF LODI

PUBLIC WORKS DEPARTMENT

Map Statements

(PARCEL MAPS)
ENGINEER'S/SURVEYOR'S STATEMENT

This map was prepared by me or under my direction and is based upon a field survey in conformance with the requirements of the Subdivision Map Act and Local ordinance at the request of _____ in_____. I hereby state that this parcel map substantially conforms to the approved or conditionally approved tentative map, if any. All monuments are of the character and occupy the positions indicated and are sufficient to enable the survey to be retraced.

Dated this _____ day of _____ 20__

_____

(Engineer) (Surveyor) (License No.)

(Registration) (License) expiration date: _____

(PARCEL MAPS)
PUBLIC WORKS DEPARTMENT'S STATEMENT

This map conforms with the requirements of the Subdivision Map Act and local ordinance. (Pursuant to the authority of Ordinance No. 1302 of the City of Lodi, I accept on behalf of the public for public use the offer of dedication of [all Public Utility easements] [sight-obstruction easement] [landscape easement] [all street rights-of-way] [the (width)-foot widening of right-of-way along Street name] [relinquishment to the City of Lodi all access rights of (Parcel Numbers) to and from (Street name)*(except at the approved access openings)*] all as shown on this Parcel Map.)

Dated this _____ day of _____ 20__.

_____

Wesley K. Fujitani, R.C.E. 30418
Senior Civil Engineer
Registration expiration date: 3-31-__
[Ex Officio City Clerk of the City of Lodi]

(PARCEL MAP)
OWNER'S STATEMENT

We, the undersigned, hereby state that we are all the parties having record title interest in the land subdivided and shown on this Parcel Map and we hereby consent to the preparation and filing of this Parcel Map in the office of the County Recorder of San Joaquin County, California.

We also offer for dedication to the public for public use [all Public Utility easements] [all street rights-of-way] [the (width)-foot widening of right-of-way along (Street Name)] [to the City of Lodi lot (No.) [relinquish to the City of Lodi all access rights of (Parcel Numbers) to and from (Street Name) *(except at the approved access openings)*] all as shown on this Parcel Map.

Dated this _____ day of _____ 20__.

_____ (Print Name/Title)

_____ (Print Name/Title)

Use only if applicable

Dr. KT	No.	Date	Revision	Appr.
Ch. WS	1	9/03	FULL STATEMENT REVIEW	
	2	2/04	REVISED OWNER'S STATEMENT	
Date 7/08	3	7/08	REVISED DIRECTOR'S STATEMENT	

Approved By: F. Wally Sandelin 2/12/04
F. Wally Sandelin
City Engineer
R.C.E. 39895
Date

STD PLAN
605

CITY OF LODI

PUBLIC WORKS DEPARTMENT

Map Statements

(FINAL MAP, PARCEL MAP, RECORD OF SURVEY)
RECORDER'S STATEMENT

Filed this _____ day of _____, 20__, at _____ _.M. in (Book, Volume) _____ of (Maps & Plats, Parcel Map, Record of Survey) at page _____, at the request of _____.

Fee: $ _____

_____ By: _____

Assessor/Recorder/County Clerk Assistant/Deputy Recorder

ACKNOWLEDGMENT

State of California
County of _____

On _____, before me, _____,
(Insert name and title of the officer)

personally appeared _____,
who proved to me on the basis of satisfactory evidence to be the person(s) whose name(s) is/are subscribed to the within instrument and acknowledged that he/she/they executed the same in his,her,their authorized capacity(ies), and that by his,her,their signature(s) on the instrument the person(s), or the entity upon behalf of which the person(s) acted, executed the instrument.

I ceritfy under PENALTY OF PURJURY under the laws of the State of California that the foregoing paragraph is true and correct.

WITNESS my hand and official seal

Signature_____ (Seal)

(FINAL MAP)
OWNER'S STATEMENT

We, the undersigned, hereby state that we are all the parties having record title interest in the lands subdivided and shown on this Final Map of "Tract No. _____, Subdivisions of San Joaquin County, (Name of Subdivision)", City of Lodi, California, and we hereby consent to the preparation and filing of this Final Map in the office of the County Recorder of San Joaquin County, California.

We also offer for dedication to the public for public use [all Public Utility easements] [sight obstruction easement] [landscape easement] [all street rights-of-way] [the (width)-foot widening of right-of-way along (Street Name)] [to the City of Lodi lot (No.) [relinquish to the City of Lodi all access rights of (Lot Numbers) to and from (Street Name) *(except at the approved access openings)*] all as shown on this Final Map.

Dated this _____ day of _____ 20__.

_____ _____

(Print Name/Title) (Print Name/Title)

Use only if applicable

Dr. KT	No.	Date	Revision	Appr.
	1	9/03	FULL STATEMENT REVIEW	
Ch. WS	2	9/05	GENERAL REVISIONS	
	3	7/08	ACKNOWLEDGEMENT REVISIONS	
Date 7/08				

Approved By: F. Wally Sandelin
F. Wally Sandelin
City Engineer
R.C.E. 39895
9/20/05
Date

STD PLAN
605

CITY OF LODI
PUBLIC WORKS DEPARTMENT

Map Statements

(FINAL MAP)
[ENGINEER'S] [SURVEYOR'S] STATEMENT

This map was prepared by me or under my direction and is based upon a field survey in conformance with the requirements of the Subdivision Map Act and local ordinance at the request of (name of person authorizing map) on (date). I hereby state that this final map substantially conforms to the conditionally approved tentative map. I further state that all the monuments shown hereon will be of the character and occupy the positions indicated before said subdivision improvements are accepted by the City of Lodi, and that said monuments will be sufficient to enable this survey to be retraced.

Dated this _____ day of _____ 20__

_____

[Engineer] [Surveyor] (License No.)

[Registration] [License] expiration date: _____

(FINAL MAPS)
PUBLIC WORKS DEPARTMENT'S STATEMENT

I, Wesley K. Fujitani, hereby state that I am a Senior Civil Engineer for the City of Lodi, California and that I have examined this Final Map of "Tract No. _____, Subdivisions of San Joaquin County, (Name of Subdivision)", City of Lodi, California and that the subdivision shown hereon is substantially the same as it appeared on the tentative map, and any approved alternations thereof. I further state that this Final Map complies with all the provisions of Title 16 of the Lodi Municipal Code, and any amendments thereto, applicable at the time of approval of the tentative map.

Dated this _____ day of _____ 20__

_____

Wesley K. Fujitani, R.C.E. 30418
Senior Civil Engineer
Registration expiration date: _____

(FINAL MAPS)
CITY CLERK'S STATEMENT

This is to state that at its regularly held meeting on the _____ day of _____, 20__, the City Council of the City of Lodi, California approved this Final Map of "Tract No. _____, Subdivisions of San Joaquin County, (Name of Subdivision)", City of Lodi, California, and accepted on behalf of the public for public use the offer of dedication of [all Public Utility Easements] [sight obstruction easement] [landscape easement] [accepted on behalf of the City the relinquishment to the City of Lodi all access rights of (Lot Numbers) to and from (Street Name) * (except at the approved access openings)*] all as shown on this Final Map and accepted the offer of dedication of [all street rights-of-way] [the (width)-foot widening of right-of-way along Street name][Lot (No.)] to the City of Lodi subject to satisfactory completion of improvements thereon of said street rights-of-way [and lot (No.) in accordance with Title 16 of the Lodi Municipal Code, and any amendments thereto, applicable at the time of approval of the tentative map.

Dated this _____ day of _____ 20__

_____

Randy Johl (City Clerk)
City Clerk and Clerk of the City Council

Dr. KT	No.	Date	Revision	Appr.
	1	9/03	FULL STATEMENT REVIEW	
Ch. WS	2	2/04	REVISED FINAL MAP STATEMENT	
	3	7/08	REVISED DIRECTOR'S STATEMENT	
Date 7/08				

Approved By: F. Wally Sandelin
F. Wally Sandelin
City Engineer
R.C.E. 39895
2/12/04
Date

STD PLAN
605

CITY OF LODI

PUBLIC WORKS DEPARTMENT

Map Statements

* Notes (Use where applicable)

1. Refer to tentative map application No. _____

2. Requirements of the Lodi Municipal Code for the dedication of rights-of-way, easements, abandonment of underground tanks and wells, payment of fees and installation of off-site street improvements and utilities have not been met at this time and must be met prior to development or issuance of a building permit or when requested by the City (on Parcels _____).

3. The P.U.E. dedication to the City of Lodi gives the City, owners of public utilities, and owners of cable TV franchises the right to access, construct, maintain, inspect, repair, replace, remove, and operate their facilities in the P.U.E.'S. No buildings or structures shall be constructed nor shall anything be planted within the easement which would interfere with the use or operation of public utilities in the easement.

4. The sight obstruction easement grants the City of Lodi the right to maintain, repair, replace or remove obstructions, both publicly and privately owned, together with the right of access necessary for the maintaining, repairing, replacing or removing said obstructions, in, over, under and across said easement. No buildings or structures shall be constructed and no shrubbery, plantings, mounds or other obstructions over 30 inches high shall be placed within said easement which would interfere with the line of sight at the adjacent intersection. Any poles or trees shall be spaced far enough apart to provide adequate sight and tree limbs shall be at least 7 feet above the ground.

5. Lot _____ except areas covered by buildings or structures shown on the approved building permit plans and subsequent revisions thereto is hereby offered as a public utility easement. "Subsequent revisions" to the plans shall be approved by the affected utilities and any necessary utility relocations will be made at the expense of the developer/owner.

6. (For Overhead Public Utility Easements)
Buildings and structures in comformance with current zoning and building ordinaces are permitted in the (north/south/west/east) feet of the (width)-foot overhead public utility to a maximum height of 23 feet.

Dr. KT	No.	Date	Revision	Appr.
	1	9/03	FULL STATEMENT REVIEW	
Ch. WS	2	2/04	ADDED NOTE #6	
Date 12/00				

Approved By: F. Wally Sandelin 2/12/04
F. Wally Sandelin
City Engineer
R.C.E. 39895
Date

STD PLAN
605

CITY OF LODI

PUBLIC WORKS DEPARTMENT

Map Statements

(FINAL MAPS)

CITY CLERK'S CERTIFICATION OF ABANDONMENT OF PUBLIC (STREET/ALLEY, UTILITY) EASEMENTS

This is to certify that at its regularly held meeting on the _____ day of _____, 20__, the City Council of the City of Lodi, California, by its approval of this final map of "Tract No. _____, Subdivisions of San Joaquin County, (Subdivision Name), did abandon each and every (Street Right-of-Way/Easement, Public Utility Easement) identified in the (Parcel Map, Final Map, Easement, Deed), filed for record _____, 20__, (Book/Volume Number, Page Number, Instrument Number), San Joaquin County Records.

Dated this _____ day of _____ 20__.

_____

(City Clerk)
City Clerk and Clerk of the City Council
of the City of Lodi, California

(FINAL MAP)

***CERTIFICATE OF DEDICATION**

(Do not combine with Owner's Statement)

The following real property is dedicated by (name and address of subdivider dedicating the property), for purpose of (name public improvement or construction of public facility):

(Legal Description)

The City of Lodi shall reconvey the property to the subdivider if the City of Lodi makes a determination pursuant to Government Code Section 66477.5 that the same public purpose for which the property was dedicated does not exist, or the property or any portion thereof, is not needed for public utilities.

*Applies only to dedication in fee (See Section 66477.5). Use only if applicable.

PUBLIC WORKS DIRECTOR'S CERTIFICATION

Abandonment only

Abandonment of (Street Right-of-Way/Easement/Public Utility Easement)

This map conforms with the requirements of the Subdivision Map Act and local ordinance. I certify that a (street/alley right-of-way easement public utility easement) accepted by record information as filed on _____ 20__, [(Instrument No. ____, Map(Book/Volume Number, Page Number)] Official Records San Joaquin County, is abandoned by the recordation of this parcel map.

Dated this _____ day of _____ 20__.

_____

Richard C. Prima, Jr., R.C.E. 28183
Public Works Director Ex-Officio City Clerk
of the City of Lodi

Sheet 5 of 5

Dr. KT	No.	Date	Revision	Appr.	Approved By:	STD PLAN
	1	9/03	FULL STATEMENT REVIEW		F. Wally Sandelin 2/12/04	605
Ch. WS	2	2/04	REMOVED RECORD OF SURVEY		F. Wally Sandelin, City Engineer, R.C.E. 39895 — Date	
Date 12/00						

CITY OF LODI

PUBLIC WORKS DEPARTMENT

Rainfall Intensity

Tc = Time of Concentration in minutes (See Design Stds §3.200)
I = Rainfall Intensity in inches per hour, 2±yr storm
I = 5.51*(Tc)^(−0.63)

Tc	I	Tc	I	Tc	I	Tc	I
10	1.29	40	0.54	90	0.32	240	0.17
11	1.22	41	0.53	95	0.31	245	0.17
12	1.15	42	0.52	100	0.30	250	0.17
13	1.09	43	0.52	105	0.29	255	0.17
14	1.04	44	0.51	110	0.29	260	0.17
15	1.00	45	0.50	115	0.28	265	0.16
16	0.96	46	0.49	120	0.27	270	0.16
17	0.92	47	0.49	125	0.26	275	0.16
18	0.89	48	0.48	130	0.26	280	0.16
19	0.86	49	0.47	135	0.25	285	0.16
20	0.83	50	0.47	140	0.24	290	0.15
21	0.81	51	0.46	145	0.24	295	0.15
22	0.79	52	0.46	150	0.23	300	0.15
23	0.76	53	0.45	155	0.23	305	0.15
24	0.74	54	0.45	160	0.23	310	0.15
25	0.73	55	0.44	165	0.22	315	0.15
26	0.71	56	0.44	170	0.22	320	0.15
27	0.69	57	0.43	175	0.21	325	0.14
28	0.68	58	0.43	180	0.21	330	0.14
29	0.66	59	0.42	185	0.21	335	0.14
30	0.65	60	0.42	190	0.20	340	0.14
31	0.63	61	0.41	195	0.20	345	0.14
32	0.62	62	0.41	200	0.20	350	0.14
33	0.61	63	0.41	205	0.19	355	0.14
34	0.60	64	0.40	210	0.19	360	0.14
35	0.59	65	0.40	215	0.19	365	0.13
36	0.58	70	0.38	220	0.18	370	0.13
37	0.57	75	0.36	225	0.18	375	0.13
38	0.56	80	0.35	230	0.18	380	0.13
39	0.55	85	0.34	235	0.18	385	0.13

Dr. KT	No.	Date	Revision	Appr.	Approved By:	STD PLAN
Ch. WS					F. Wally Sandelin 12/28/00	606
Date 12/00					F. Wally Sandelin, City Engineer, R.C.E. 39895 — Date	

CITY OF LODI

PUBLIC WORKS DEPARTMENT

Gutter Hydraulic Capacities

Assumptions:

Street Cross Slope = 2½%
Manning's "n" = .015
Pavement hike-up at toe of curb = 3/8"

DRIVEWAY-TYPE CURB & GUTTER

Street Flooding

Depth (ft)	Area (SF)	from top of curb (ft.)	Q/S^(1/2)
0.20	0.2	2.1	5.1
0.21	0.3	2.6	5.2
0.22	0.3	3.0	5.6
0.23	0.3	3.5	6.1
0.24	0.3	3.9	6.8
0.25	0.4	4.4	7.7
0.26	0.4	4.8	8.6
0.27	0.5	5.3	9.8
0.28	0.5	5.7	11.1
0.29	0.6	6.2	12.5
0.30	0.7	6.6	14.2
0.31	0.7	7.1	15.9
0.32	0.8	7.5	17.9
0.33	0.9	8.0	20.1
0.34	1.0	8.4	22.4
0.35	1.0	8.9	25.0
0.36	1.1	9.3	27.8
0.37	1.2	9.8	31.0
0.38	1.3	10.2	34.2
0.39	1.4	10.7	37.5
0.40	1.6	11.1	41.2
0.41	1.7	11.6	45.0
0.42	1.8	12.0	49.3

FLOW EXCEEDS TOP OF CURB

SQUARE-TYPE CURB & GUTTER

Street Flooding

Depth (ft)	Area (SF)	from top of curb (ft.)	Q/S^(1/2)
0.20	0.2	3.3	3.6
0.21	0.3	3.7	4.2
0.22	0.3	4.1	5.0
0.23	0.3	4.5	5.8
0.24	0.4	4.9	6.8
0.25	0.4	5.3	8.0
0.26	0.5	5.7	9.3
0.27	0.6	6.1	10.7
0.28	0.6	6.5	12.2
0.29	07	6.9	14.0
0.30	0.8	7.3	15.9
0.31	0.8	7.7	17.9
0.32	0.9	8.1	20.2
0.33	1.0	8.5	22.7
0.34	1.1	8.9	25.3
0.35	1.2	9.3	28.1
0.36	1.3	9.7	31.1
0.37	1.4	10.1	34.4
0.38	1.5	10.5	37.8
0.39	1.6	10.9	41.5
0.40	1.7	11.3	45.4
0.41	1.8	11.7	49.6
0.42	1.9	12.1	54.0
0.43	2.0	12.5	58.6
0.44	2.2	12.9	63.5
0.45	2.3	13.3	68.6
0.46	2.4	13.7	73.9
0.47	2.6	14.1	79.6
0.48	2.7	14.5	85.4
0.49	2.9	14.9	91.8
0.50	3.0	15.3	98.2

FLOW EXCEEDS TOP OF CURB

Q-Flow in cfs
S-Slope in curb and gutter

Dr. KT	No.	Date	Revision	Appr.
Ch. WS	1	2/04	REVISED FORMULA	
Date 12/00				

Approved By: F. Wally Sandelin, City Engineer, R.C.E. 39895 — 2/12/04 Date

STD PLAN 608

CITY OF LODI

PUBLIC WORKS DEPARTMENT

Sanitary Sewer Leakage Test

Project _____ First Test Date _____

Test Section _____ Station _____ MH to _____ MH

Contractor _____ Inspector _____

HYDROSTATIC TEST

Allowable leakage shall not exceed 0.6 gallons per hour per inch diameter per 100 feet of pipe.

TAPS: Lot #___, ___, ___, ___, ___, ___.

TAPS: Length#___, ___, ___, ___, ___, ___.=___.

Water level at start of test _____

Pipe Size	Factor (gph/ft)		Length LF		Allowable loss in gallons
4"	0.024	x	_____	=	___.___
6"	0.036	x	_____	=	___.___
8"	0.048	x	_____	=	___.___
10"	0.060	x	_____	=	___.___
12"	0.072	x	_____	=	___.___
18"	0.108	x	_____	=	___.___
24"	0.144	x	_____	=	___.___
30"	0.180	x	_____	=	___.___
"	.	x	_____	=	___.___
48"MH	0.300	x	___ high	=	___.___

Allowable loss: one hour = ____.____gal.

AIR TEST

Use largest pipe size under pressure and circle below. "Holding Time" represents minimum time for pressure loss from 3.5 psi to 2.5 psi.

Pipe Size		Holding time in minutes
4"	=	2
6"	=	3
8"	=	4
10"	=	5
12"	=	6
18"	=	9
24"	=	11
30"	=	14

Date	Time	Gallon Loss: Actual/Allowable	Air Time: Actual/Required	Pass	Fail	Inspector

All utilities in and compaction completed: yes ___ no ___

Remarks:

Dr. KT	No.	Date	Revision	Appr.
Ch. WS	1	04/07	REVISED FACTORS	
Date 12/00				

Approved By: F. Wally Sandelin, City Engineer, R.C.E. 39895 — 12/28/00 Date

STD PLAN 610

CITY OF LODI

PUBLIC WORKS DEPARTMENT

R/W Corner Cut–off & Curb Return Requirements

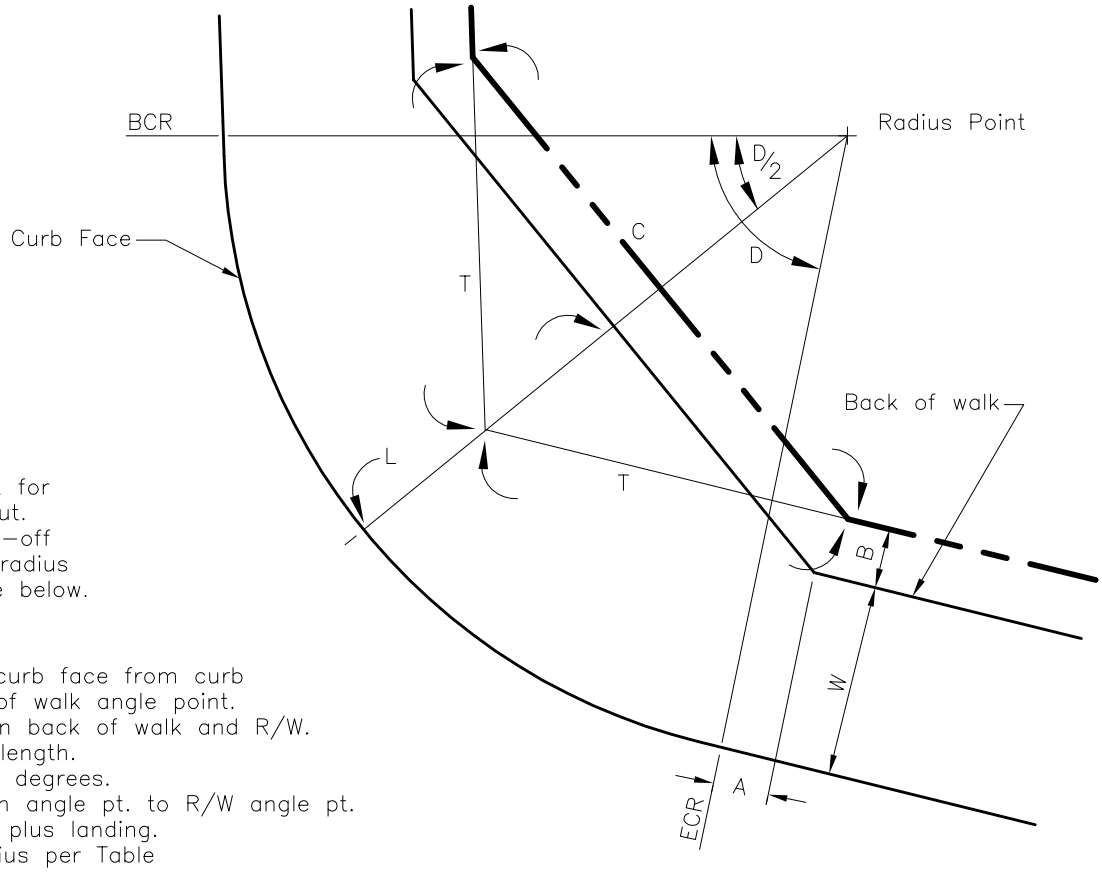

NOTES
1. See Std. Plan 612 for curb return layout.
2. Provide corner cut–off for curb return radius required in Table below.

LEGEND
A = Distance along curb face from curb return to back of walk angle point.
B = Distance between back of walk and R/W.
C = Corner cut–off length.
D = Central angle in degrees.
E = B.O.W. dist. from angle pt. to R/W angle pt.
L = Length of ramp plus landing.
R = Curb return radius per Table
T = R/W tangent distance in ft.
W = Distance from face of curb to back of walk in ft.

FORMULAS

$$A = \frac{R-W-[\,(R-L)\ /\ \cos(D/2)\,]}{\tan\,(D/2)} \text{ or } (R-W)\ /\tan(D/2) - (R-L)\ /\sin(D/2)$$

$C = 2T\cos(D/2)$ $\qquad$ $E = B\tan(D/4)$ $\qquad$ L = 10' for R = 20' & 25'; 12' for R = 30' & 35'

$$T = (R-W-B)\tan(D/2) + \frac{R-W-B-[\,(R-L-B)\ /\ \cos(D/2)\,]}{\tan\,(D/2)}$$

CURB RETURN RADIUS TABLE

Intersection of:	Face–Face	Minor Res.	Std. Res.	Minor Collector	Major Collector	Industrial (Local)	Arterial
Minor Res.	34'	20'	–	–	–	–	–
Std. Res.	39'	20'	20'	–	–	–	–
Minor Col.	44'	20'	20'	25'	–	–	–
Major Col.	52'	20'	20'	25'	30'	–	–
Ind. Local	52'	–	–	–	30'	30'	–
Arterial	64'	25'	25'	30'	30'	35'	35'
Other	>64'	* *	S P E C I A L		D E S I G N	* *	

Dr. KT	No.	Date	Revision	Appr.	Approved By:	STD PLAN
Ch. WS					F. Wally Sandelin 12/28/00	611
Date 12/00					F. Wally Sandelin, City Engineer, R.C.E. 39895 — Date	

CITY OF LODI

PUBLIC WORKS DEPARTMENT

Curb Return Layout Plan

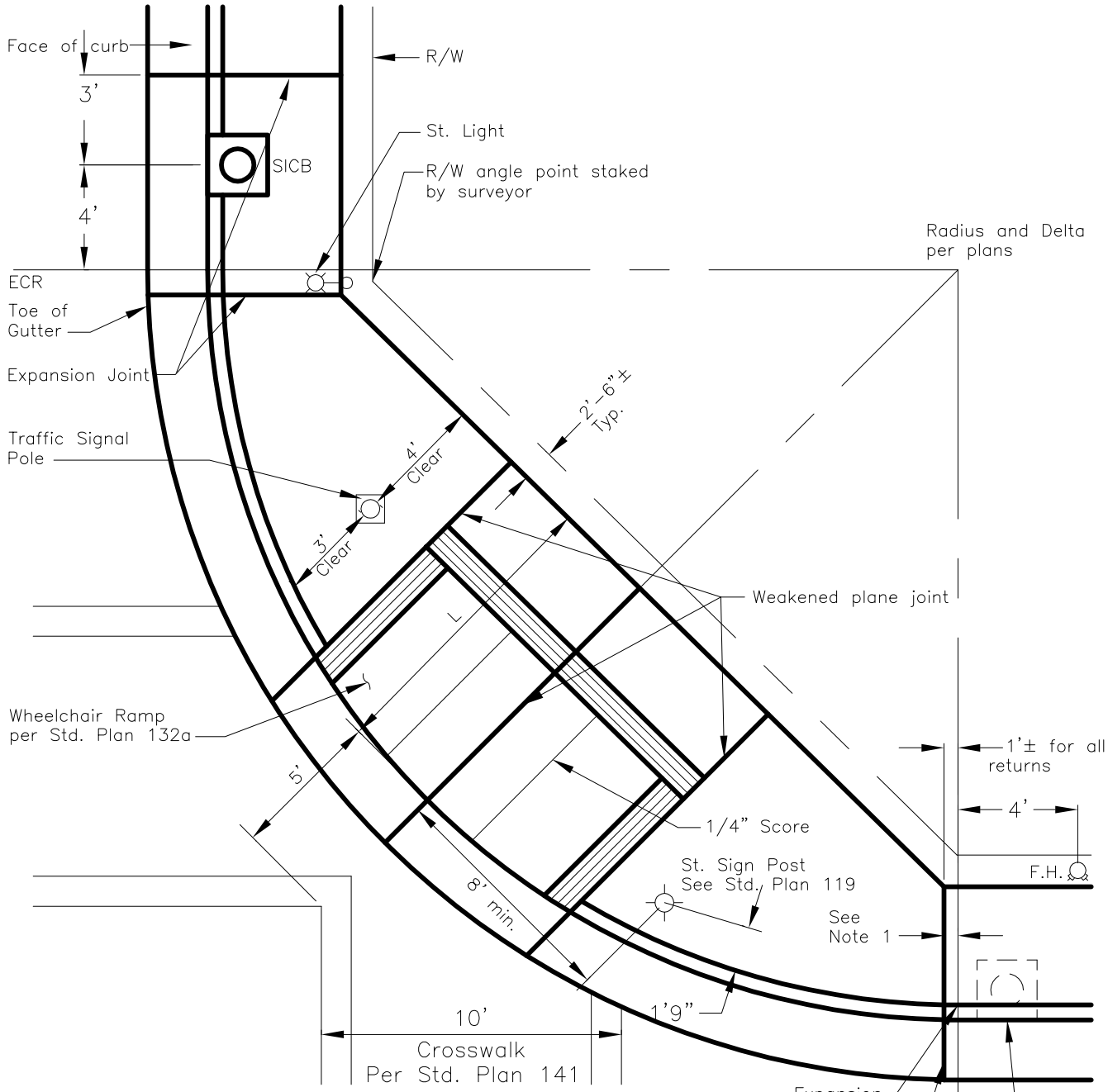

Notes:

1. Curb return to back of walk angle point distance varies. When actual distance is less than 2', curb return shall be placed at back of walk angle point and curb return curve forced to fit.
2. BCR and ECR station per plans (nominal, see note 1)
3. L=10' for R=20' and 25'; 12' for R=30' and 35'

Dr. KT	No.	Date	Revision	Appr.	Approved By:	STD PLAN
Ch. WS					F. Wally Sandelin, City Engineer, R.C.E. 39895 — 12/28/00 Date	612
Date 12/00						

CITY OF LODI

PUBLIC WORKS DEPARTMENT

GENERAL NOTES MARKER DETAILS LEGEND

NOTES

1. MINIMUM PROJECTED AREA OF REFLECTIVE FACE = 1.00 SQUARE INCH.
2. REFLECTIVE MARKERS NEED NOT BE RECTANGULAR.

LEGEND

- TYPE A WHITE NON-REFLECTIVE
- TYPE AY YELLOW NON-REFLECTIVE
- TYPE C RED-CLEAR RETROREFLECTIVE
- TYPE D TWO-WAY YELLOW RETROREFLECTIVE
- TWO-WAY BLUE RETROREFLECTIVE
- TYPE G ONE-WAY CLEAR RETROREFLECTIVE
- TYPE H ONE-WAY YELLOW RETROREFLECTIVE

LINES

- 4" WHITE
- 4" YELLOW
- DIRECTION OF TRAVEL

MARKER DETAILS

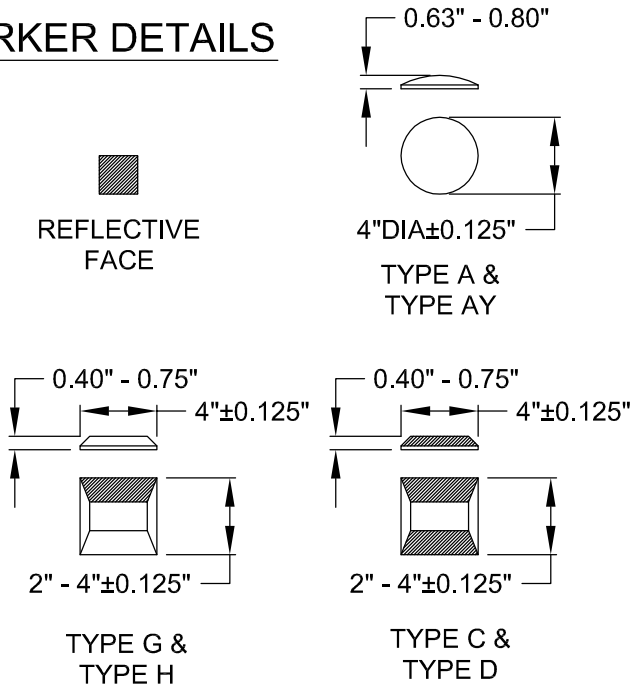

Dr. JSB	No.	Date	Revision	Appr.
Ch. PJF	1	2/05	ADDED BLUE REFLECTOR	PJF
Date 2/04				

Approved By: F. Wally Sandelin, City Engineer, R.C.E. 39895 — 2/2/05 Date

STD PLAN 700

CITY OF LODI

PUBLIC WORKS DEPARTMENT

LANE STRIPING TYPICAL DETAIL FOR SPEED ZONES 40 MPH OR LESS

CENTER LINES
(2 LANE HIGHWAYS)

DETAIL 1

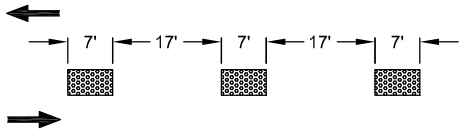

DETAIL 2

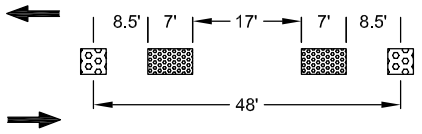

LANE LINES
(MULTILANE HIGHWAYS)

DETAIL 8

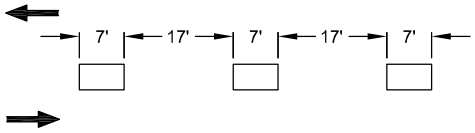

DETAIL 9

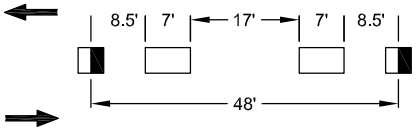

NO PASSING ZONE
(ONE DIRECTION)

DETAIL 15

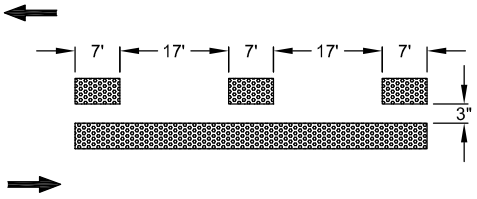

DETAIL 16

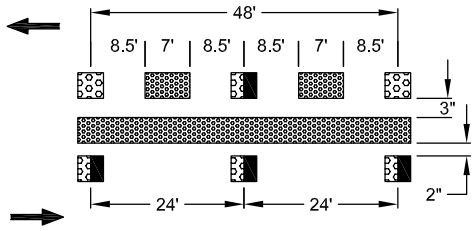

Dr. JSB	No.	Date	Revision	Appr.
Ch. PJF				
Date 2/04				

Approved By:

F. Wally Sandelin
City Engineer
R.C.E. 39895

2/12/04
Date

STD PLAN

701

CITY OF LODI

PUBLIC WORKS DEPARTMENT

LANE STRIPING TYPICAL DETAIL FOR SPEED ZONES 45 MPH OR MORE

CENTER LINES
(2 LANE HIGHWAYS)

DETAIL 5

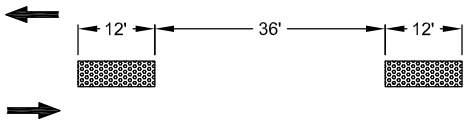

DETAIL 6

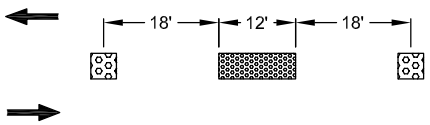

LANE LINES
(MULTILANE HIGHWAYS)

DETAIL 11

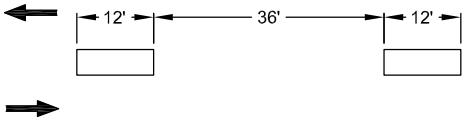

DETAIL 12

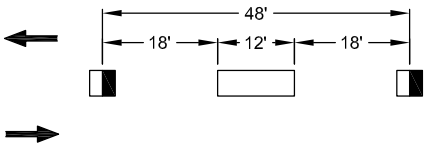

NO PASSING ZONE
(ONE DIRECTION)

DETAIL 18

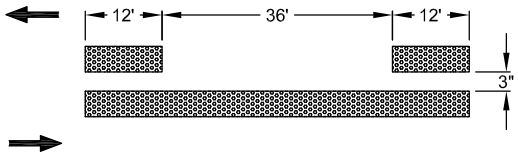

DETAIL 19

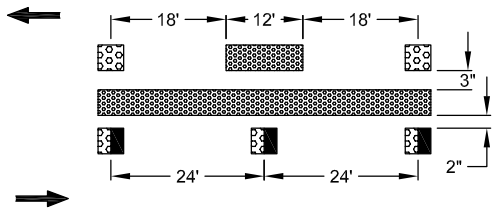

Dr. JSB	No.	Date	Revision	Appr.	Approved By:	STD PLAN
Ch. PJF					F. Wally Sandelin, City Engineer, R.C.E. 39895 — 2/12/04 Date	702-1
Date 2/04						

CITY OF LODI

PUBLIC WORKS DEPARTMENT

TYPICAL DETAIL
NO PASSING ZONES

NO PASSING ZONE
(TWO DIRECTIONS)

DETAIL 21

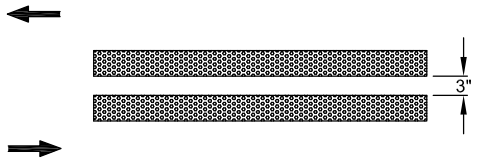

NO PASSING ZONE
(TWO DIRECTIONS)

DETAIL 22

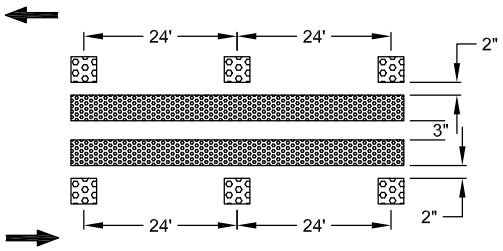

Dr. JSB	No.	Date	Revision	Appr.	Approved By:	STD PLAN
Ch. PJF					F. Wally Sandelin City Engineer R.C.E. 39895 2/12/04 Date	702-2
Date 2/04						

CITY OF LODI

PUBLIC WORKS DEPARTMENT

EDGELINE AND MEDIAN LANE STRIPING TYPICAL DETAILS

LEFT EDGELINES
(DIVIDED HIGHWAYS)

DETAIL 24

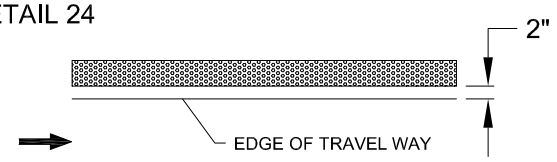

DETAIL 25

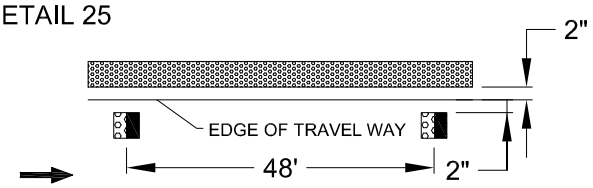

DETAIL 25A- USE ON FREEWAY RAMPS AND CONNECTORS

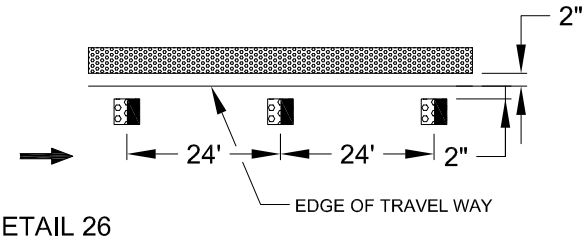

DETAIL 26

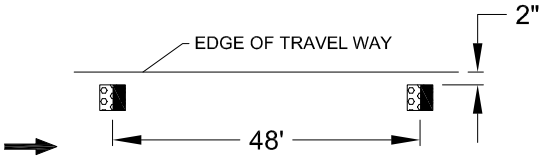

DETAIL 27

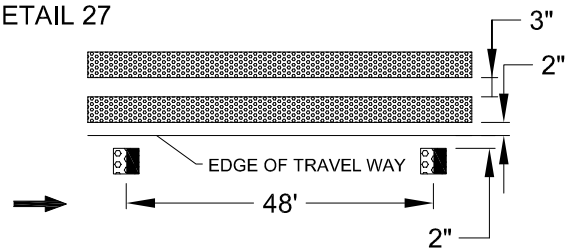

RIGHT EDGELINES

DETAIL 27B

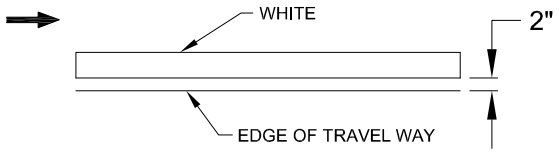

RIGHT EDGELINES
(EXTENSION THROUGH INTERSECTION)

DETAIL 27C

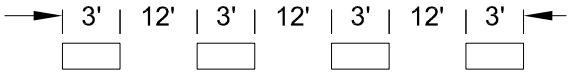

DETAIL 28

MEDIAN ISLANDS

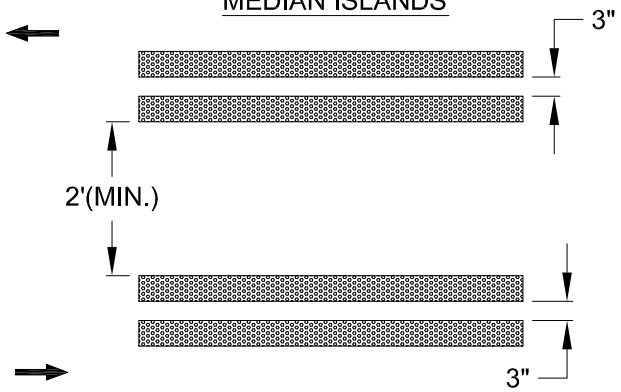

DETAIL 29

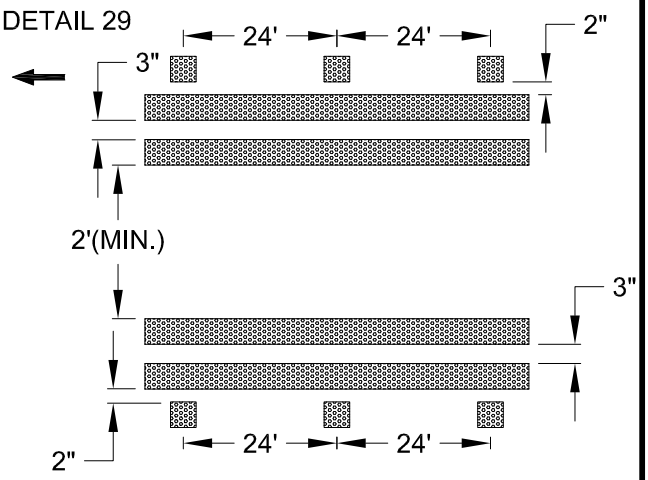

Dr. JSB	No.	Date	Revision	Appr.
Ch. PJF	1	2/05	REVISED DIMENSION	
Date 2/04				

Approved By:

F. Wally Sandelin
City Engineer
R.C.E. 39895

2/2/05
Date

STD PLAN

703

CITY OF LODI

PUBLIC WORKS DEPARTMENT

TWO-WAY LEFT TURN LANE DETAILS

TWO-WAY LEFT TURN LANES

DETAIL 31

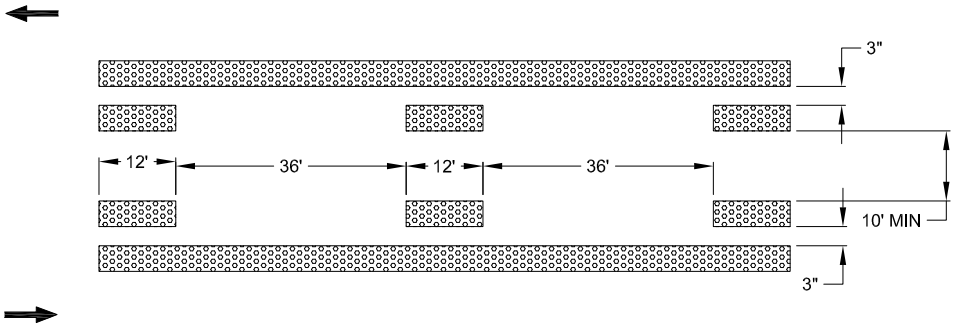

DETAIL 32

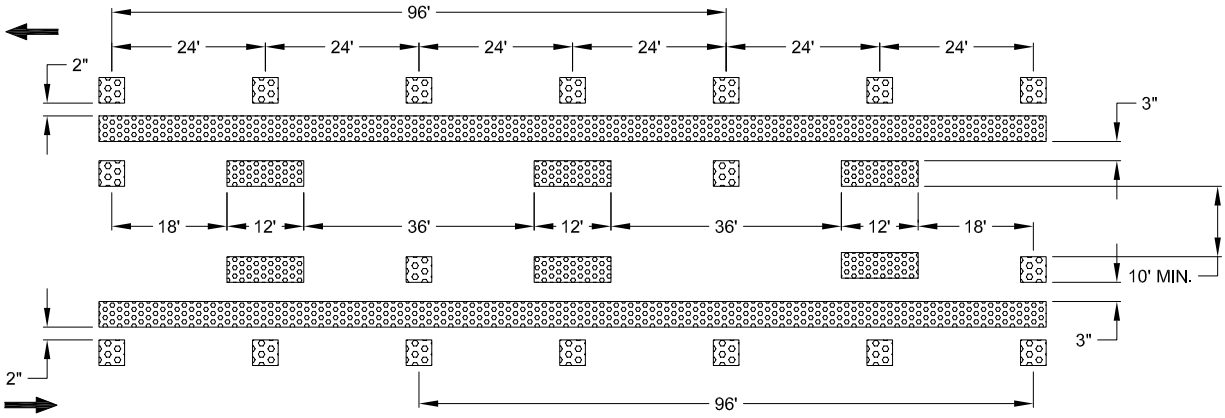

Dr. JSB	No.	Date	Revision	Appr.
	1	2/05	REVISED MIN. LANE DIMENSION	
Ch. PJF				
Date 2/04				

Approved By:

F. Wally Sandelin
City Engineer
R.C.E. 39895

2/2/05
Date

STD PLAN

704

CITY OF LODI

PUBLIC WORKS DEPARTMENT

LANE DROPS
CHANNELIZING LANES
TYPICAL DETAILS

LANE DROP AT EXIT RAMPS

DETAIL 37

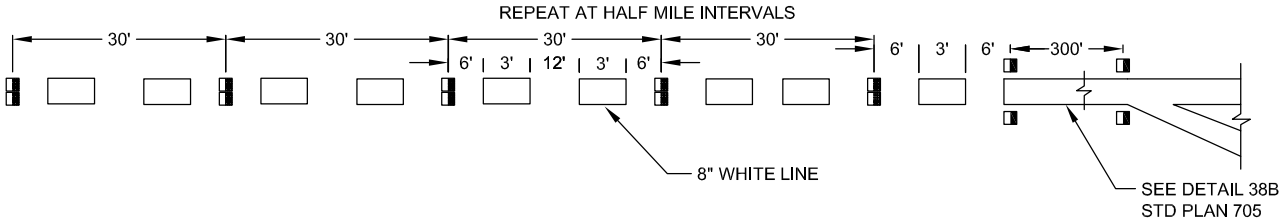

LANE DROP AT INTERSECTION

DETAIL 37B

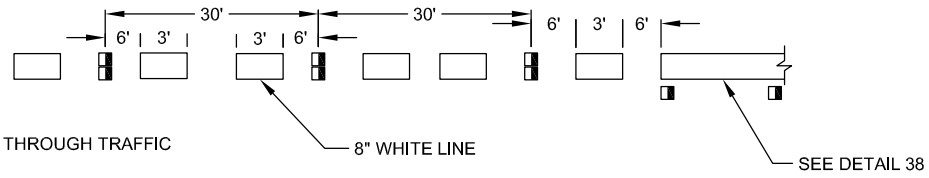

CHANNELIZING LINE

DETAIL 38

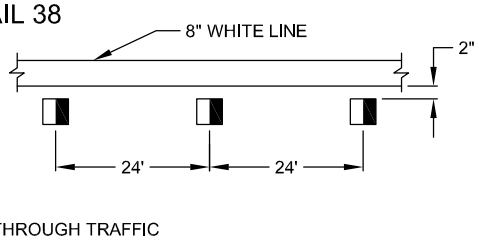

DETAIL 38B

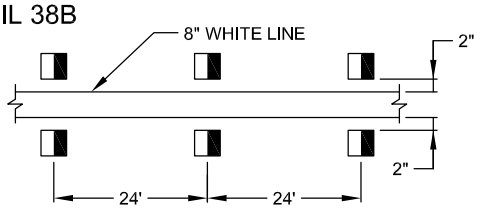

DETAIL 38A

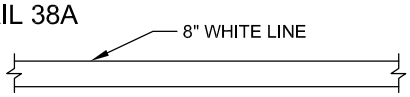

Dr. JSB	No.	Date	Revision	Appr.
Ch. PJF	1	2/05	REVISED DETAIL REFERENCE	
Date 2/04				

Approved By:

F. Wally Sandelin
City Engineer
R.C.E. 39895

2/2/05
Date

STD PLAN

705

CITY OF LODI

PUBLIC WORKS DEPARTMENT

BIKE LANE LINES
LANE LINE EXTENSIONS
TYPICAL DETAILS

BIKE LANE LANES

DETAIL 39

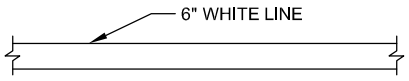

DETAIL 39A

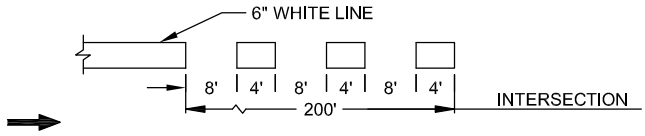

LANE LINE EXTENSIONS THROUGH INTERSECTIONS

DETAIL 40

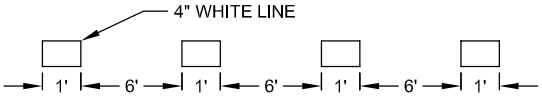

DETAIL 40

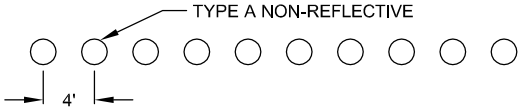

Dr. JSB	No.	Date	Revision	Appr.	Approved By:	STD PLAN
Ch. PJF					F. Wally Sandelin City Engineer R.C.E. 39895 2/12/04 Date	706
Date 2/04						

CITY OF LODI

PUBLIC WORKS DEPARTMENT

LANE LINE STRIPING DETAIL

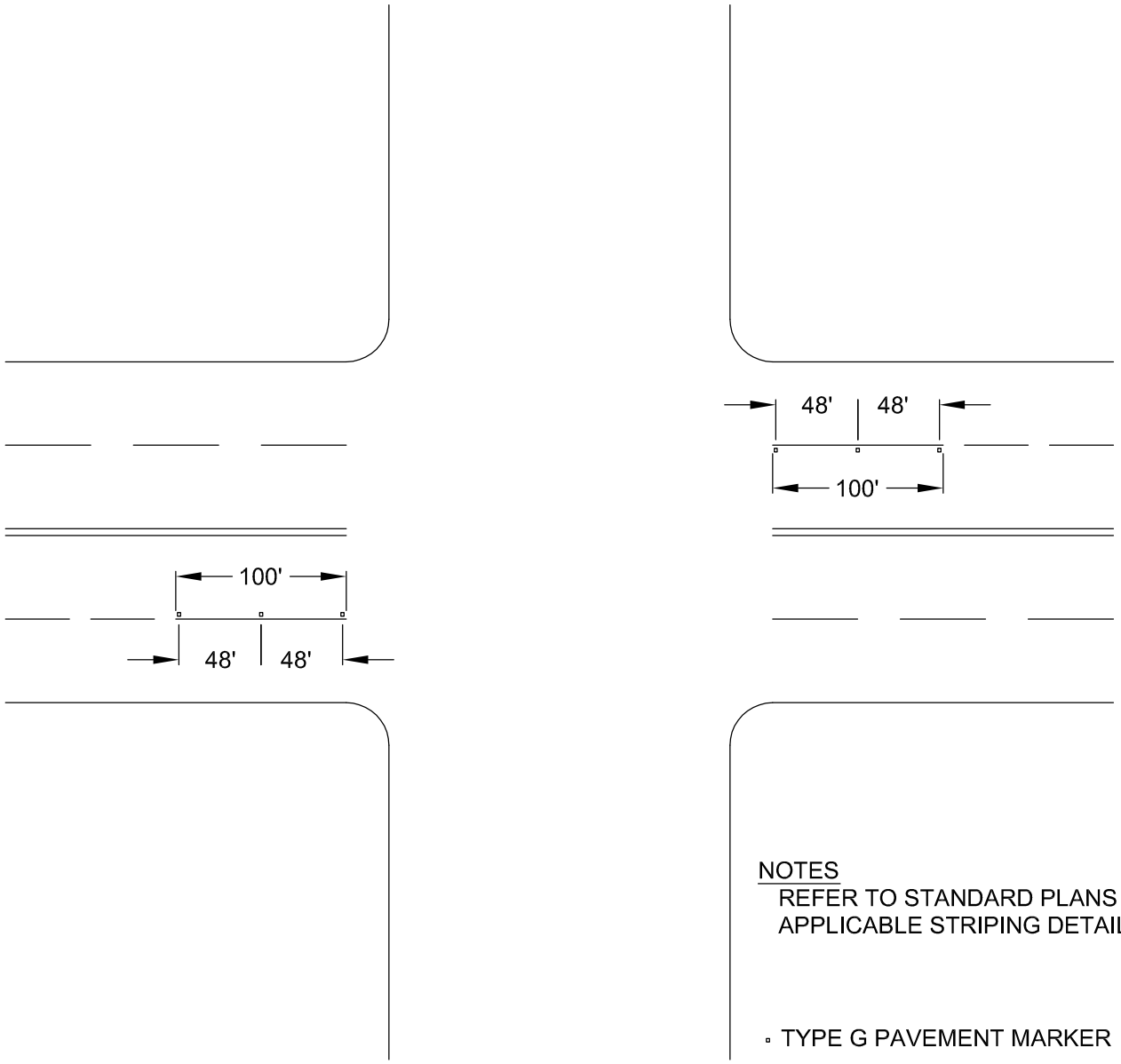

NOTES

REFER TO STANDARD PLANS FOR APPLICABLE STRIPING DETAILS

▫ TYPE G PAVEMENT MARKER

Dr. JSB	No.	Date	Revision	Appr.
	1	8/13/07	ADDED TYPE G MARKER	
Ch. PJF				
Date 2/04				

Approved By:

F. Wally Sandelin
City Engineer
R.C.E. 39895

8/13/07
Date

STD PLAN

707

CITY OF LODI

PUBLIC WORKS DEPARTMENT

SCHOOL PAVEMENT MARKING DETAIL

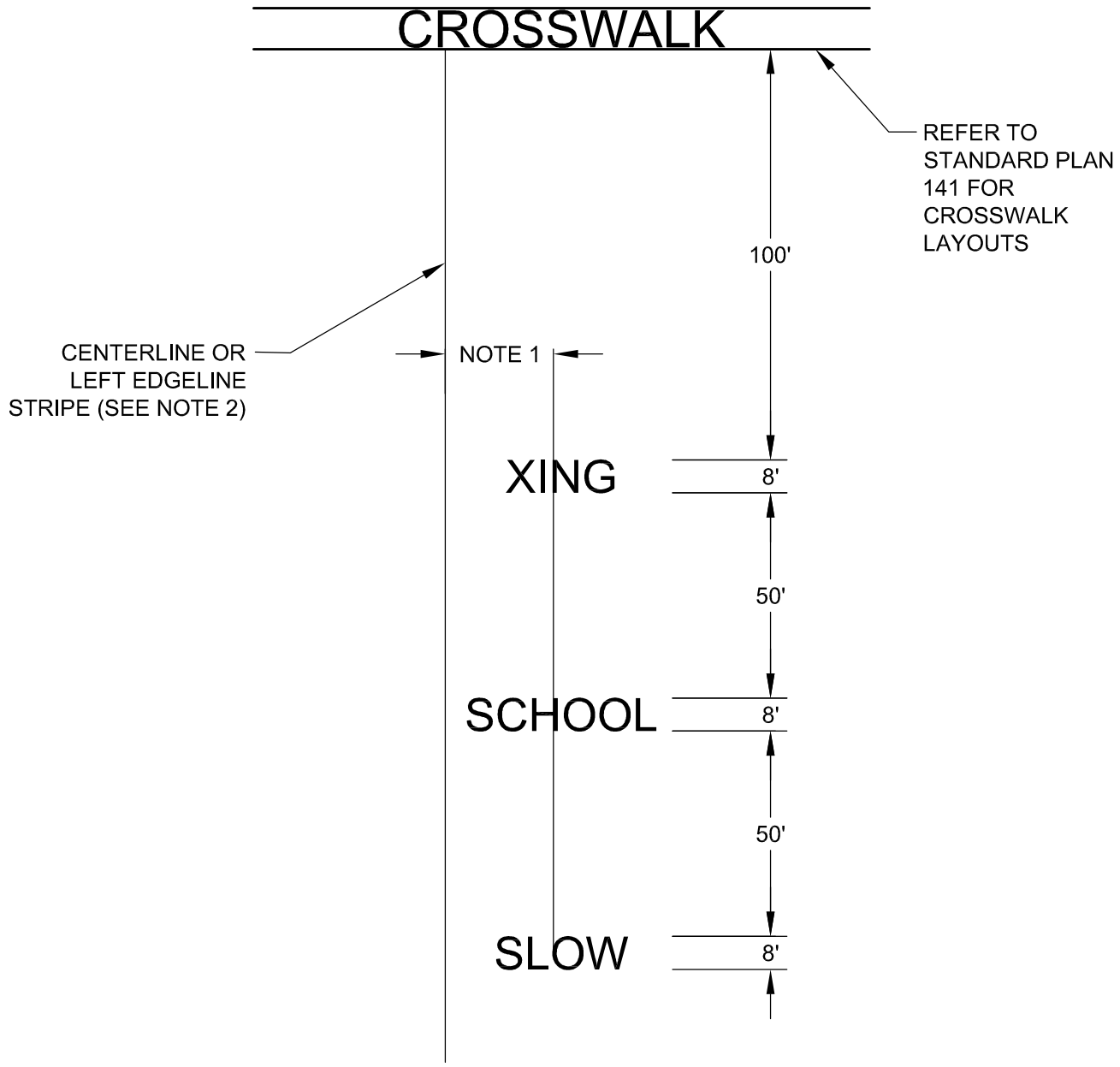

NOTE

1. CENTER LEGEND IN TRAVEL LANE AT 6' (MAX).
2. FOR MULTIPLE LANES, CENTER THE LEGEND IN TRAVEL LANES EXCLUDING PARKING LANE. 6' (MAX)

Dr. JSB	No.	Date	Revision	Appr.	Approved By:	STD PLAN
Ch. PJF					F. Wally Sandelin, City Engineer, R.C.E. 39895 — 2/12/04 Date	708
Date 2/04						

CITY OF LODI

PUBLIC WORKS DEPARTMENT

STOP AHEAD PAVEMENT MARKING DETAIL

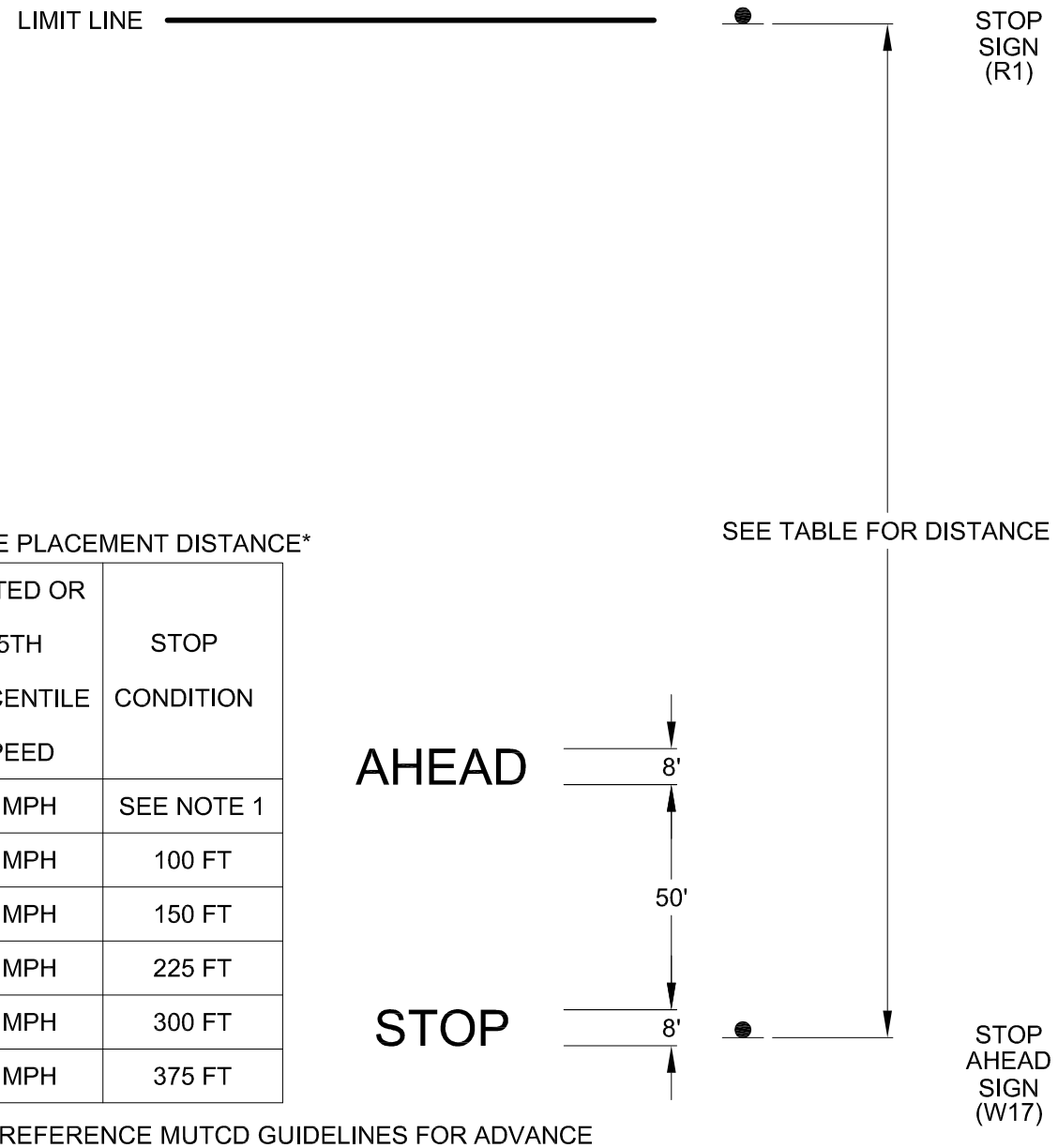

ADVANCE PLACEMENT DISTANCE*

POSTED OR 85TH PERCENTILE SPEED	STOP CONDITION
25 MPH	SEE NOTE 1
30 MPH	100 FT
35 MPH	150 FT
40 MPH	225 FT
45 MPH	300 FT
50 MPH	375 FT

REFERENCE MUTCD GUIDELINES FOR ADVANCE PLACEMENT OF WARNING SIGN TABLE

NOTES

1. NO SUGGESTED MINIMUM DISTANCES ARE PROVIDED FOR THESE SPEEDS, AS PLACEMENT LOCATION IS DEPENDENT ON SITE CONDITIONS AND OTHER SIGNING TO PROVIDE AN ADEQUATE WARNING FOR THE DRIVER.

Dr. JSB	No.	Date	Revision	Appr.	Approved By:	STD PLAN
Ch. PJF					F. Wally Sandelin, City Engineer, R.C.E. 39895 — 2/12/04 Date	709
Date 2/04						

CITY OF LODI

PUBLIC WORKS DEPARTMENT

PAVEMENT MARKING DETAILS

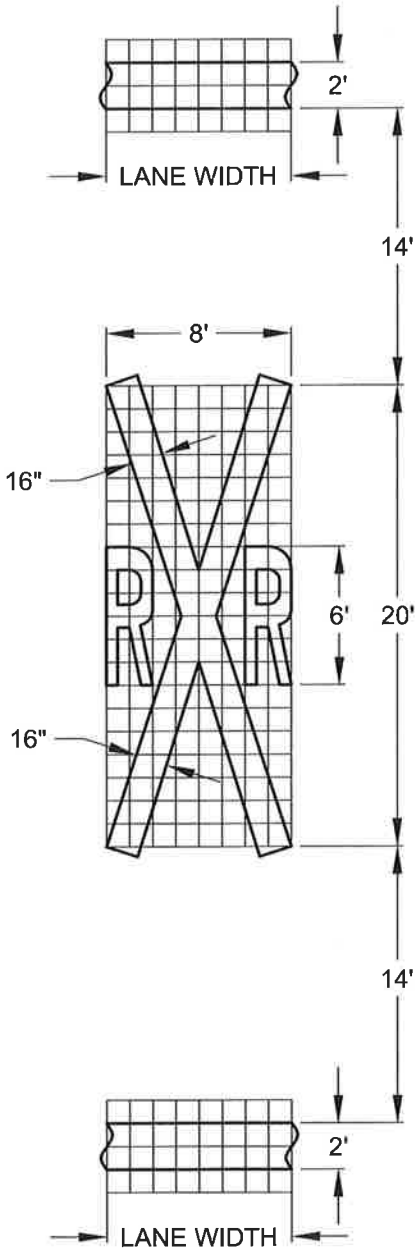

RAILROAD CROSSING SYMBOL
A = 70 SQ. FT.*
12 INCH GRID
*THE 70 SQ. FT. DOES NOT INCLUDE THE 2' X LANE WIDTH TRANSVERSE LINES

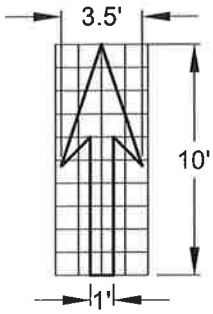

TYPE I (10) ARROW
A = 14 SQ. FT.
12 INCH GRID

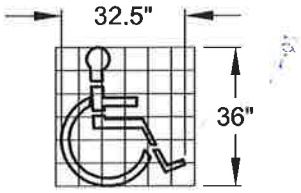

HANDICAPPED PARKING
A = 3 SQ. FT.
6 INCH GRID

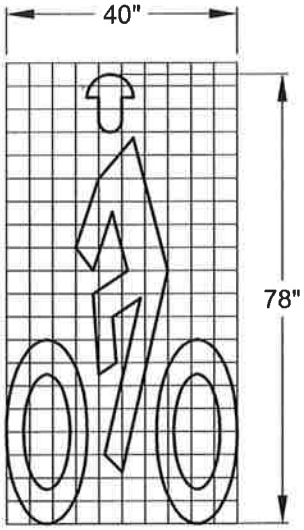

BIKE LANE SYMBOL
A = 7 SQ. FT.
4 INCH GRID

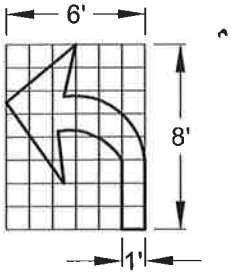

TYPE IV (L) ARROW
(FOR TYPE IV(R) ARROW USE MIRROR IMAGE)
A = 15 SQ. FT.
12 INCH GRID

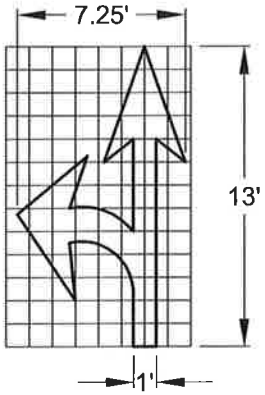

TYPE VII (L) ARROW
(FOR TYPE VII(R) ARROW USE MIRROR IMAGE)
A = 27 SQ. FT.
12 INCH GRID

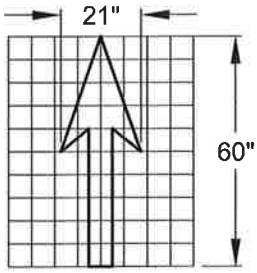

BIKE LANE ARROW
A = 7 SQ. FT.
6 INCH GRID

ARROWS TO BE INSTALLED 10' FROM BEGINNING OF TURN POCKET

Dr. JP	No.	Date	Revision	Appr.	Approved By:	STD PLAN
Ch. DK	1	8/17	REVERSED CYCLIST DIRECTION		Lynnin Chang, City Engineer, RCE No. 53149 — Date 8/17/17	710-1
Date						

CITY OF LODI

PUBLIC WORKS DEPARTMENT

PAVEMENT MARKING DETAILS

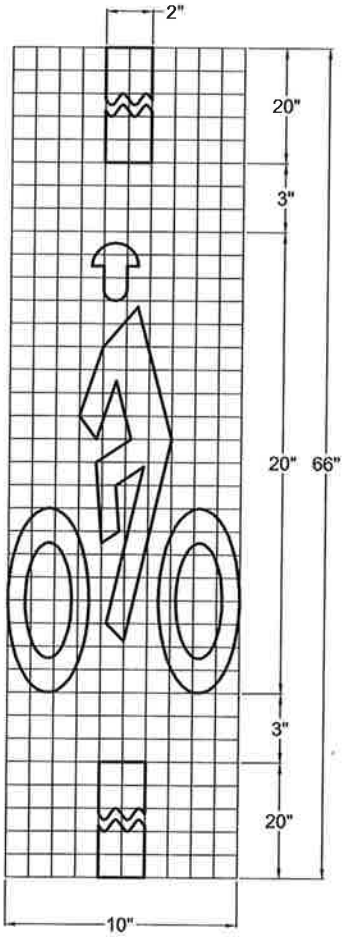

BICYCLE LOOP DETECTOR SYMBOL

1 INCH GRID

Dr. JP	No.	Date	Revision	Appr.	Approved By:	STD PLAN
Ch. DK	1	8/17	REVERSED CYCLIST DIRECTION		Lyman Chang, City Engineer, RCE No. 53149 — Date 8/17/17	710-2
Date						

CITY OF LODI

PUBLIC WORKS DEPARTMENT

PAVEMENT MARKING DETAILS

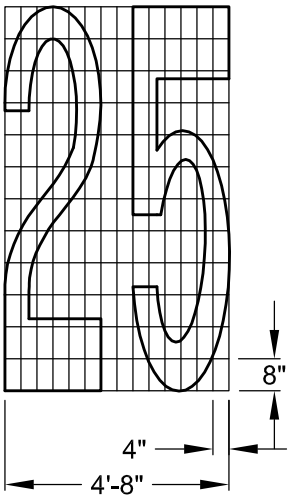

A=17.5 SQ. FT.

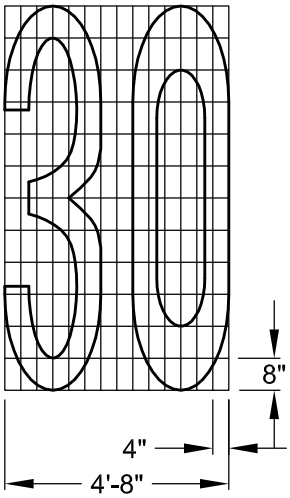

A=16.6 SQ. FT.

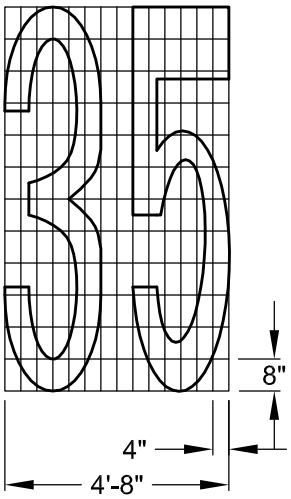

A=16.5 SQ. FT.

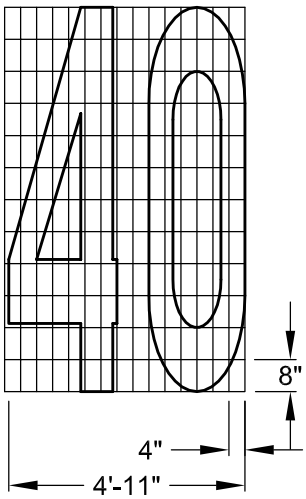

A=19.5 SQ. FT.

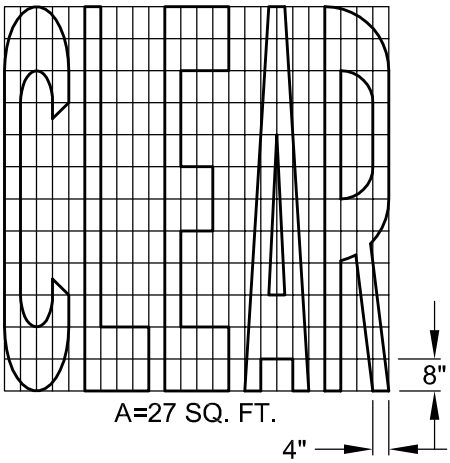

A=27 SQ. FT.

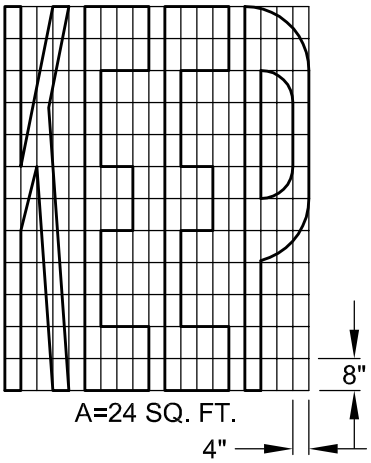

A=24 SQ. FT.

ALL PAVEMENT WORD HEIGHTS ARE 8' TALL UNLESS OTHERWISE NOTED.

Dr. JSB	No.	Date	Revision	Appr.	Approved By:	STD PLAN
Ch. PJF	1	8/13/07	ADDED 30 MPH LEGEND		F. Wally Sandelin, City Engineer, R.C.E. 39895 — 8/13/07 Date	711-1
Date 2/04						

CITY OF LODI

PUBLIC WORKS DEPARTMENT

PAVEMENT MARKING DETAILS

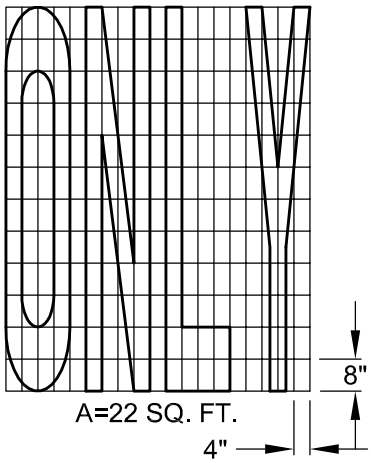

A=22 SQ. FT.

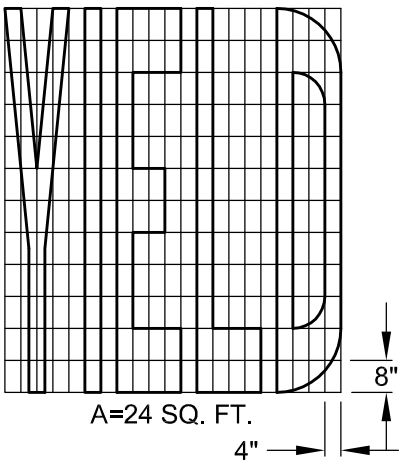

A=24 SQ. FT.

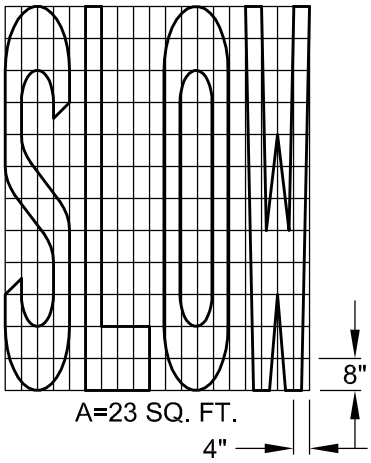

A=23 SQ. FT.

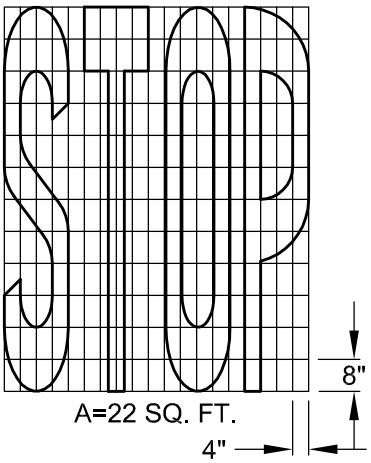

A=22 SQ. FT.

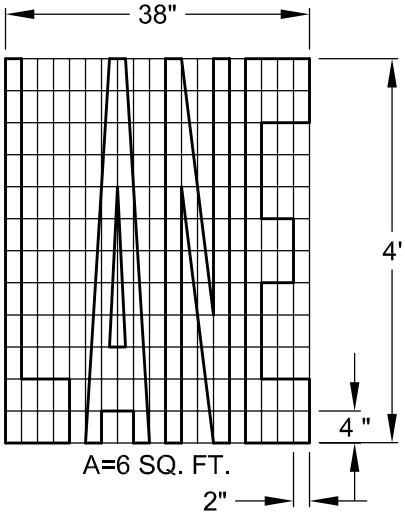

A=6 SQ. FT.

ALL PAVEMENT WORD HEIGHTS ARE 8' TALL UNLESS OTHERWISE NOTED.

Dr. JSB	No.	Date	Revision	Appr.	Approved By: F. Wally Sandelin, City Engineer, R.C.E. 39895 — 2/12/04 Date
Ch. PJF					STD PLAN
Date 2/04					711-2

CITY OF LODI

PUBLIC WORKS DEPARTMENT

PAVEMENT MARKING DETAILS

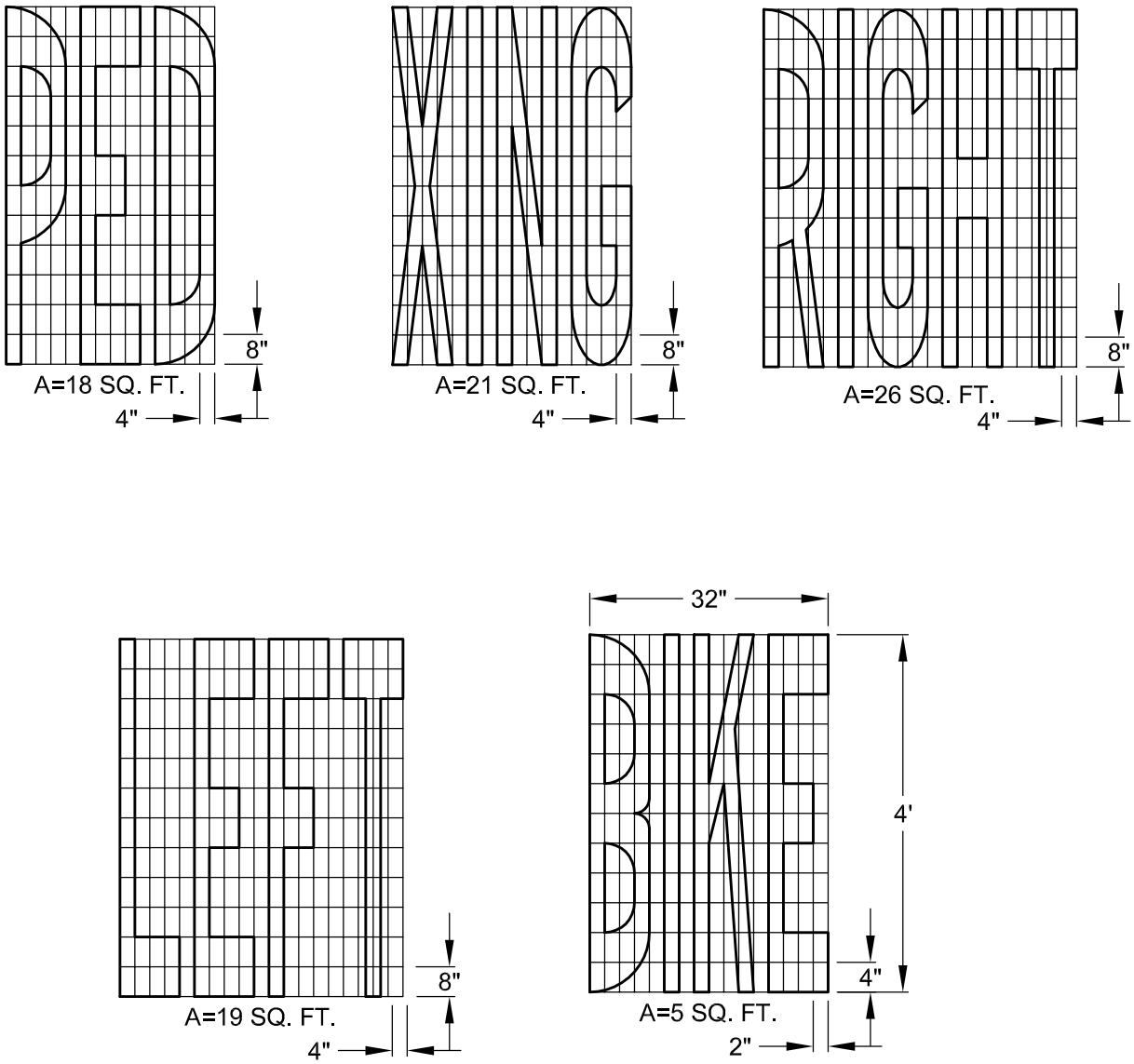

ALL PAVEMENT WORD HEIGHTS ARE 8' TALL UNLESS OTHERWISE NOTED.

Dr. JSB	No.	Date	Revision	Appr.	Approved By: F. Wally Sandelin, City Engineer, R.C.E. 39895 — 2/12/04 Date
Ch. PJF					STD PLAN
Date 2/04					711-3

CITY OF LODI

PUBLIC WORKS DEPARTMENT

PAVEMENT MARKING DETAILS

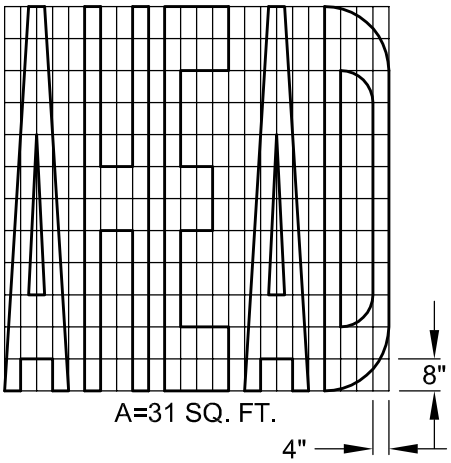

A=31 SQ. FT.

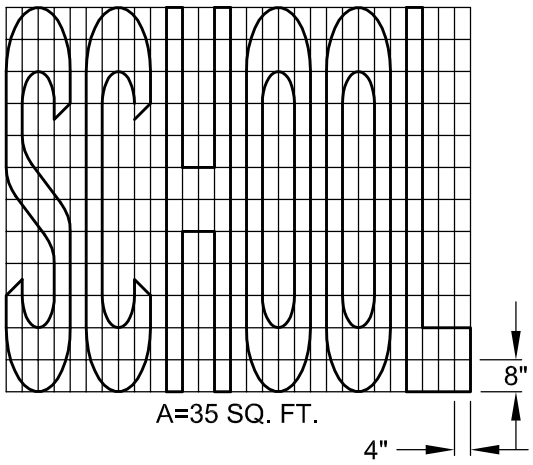

A=35 SQ. FT.

ALL PAVEMENT WORD HEIGHTS ARE 8' TALL UNLESS OTHERWISE NOTED.

Dr. JSB	No.	Date	Revision	Appr.	Approved By:	STD PLAN
Ch. PJF					F. Wally Sandelin City Engineer R.C.E. 39895 — 2/12/04 Date	711-4
Date 2/04						

CITY OF LODI

PUBLIC WORKS DEPARTMENT

ROADSIDE SIGN TYPICAL INSTALLATION

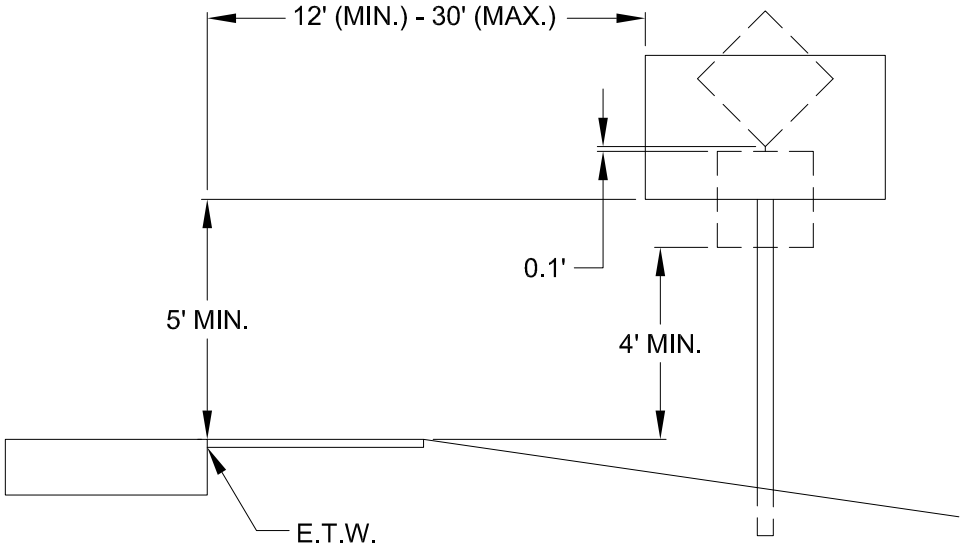

E.T.W.= EDGE OF TRAVEL WAY

LOCATION WITH NO CURBING/ AC BERM

Dr. JSB	No.	Date	Revision	Appr.	Approved By:	STD PLAN
Ch. PJF					F. Wally Sandelin City Engineer R.C.E. 39895 — 2/11/04 Date	712
Date 2/04						

CITY OF LODI

PUBLIC WORKS DEPARTMENT

BIKE LANE PAVEMENT MARKING DETAIL

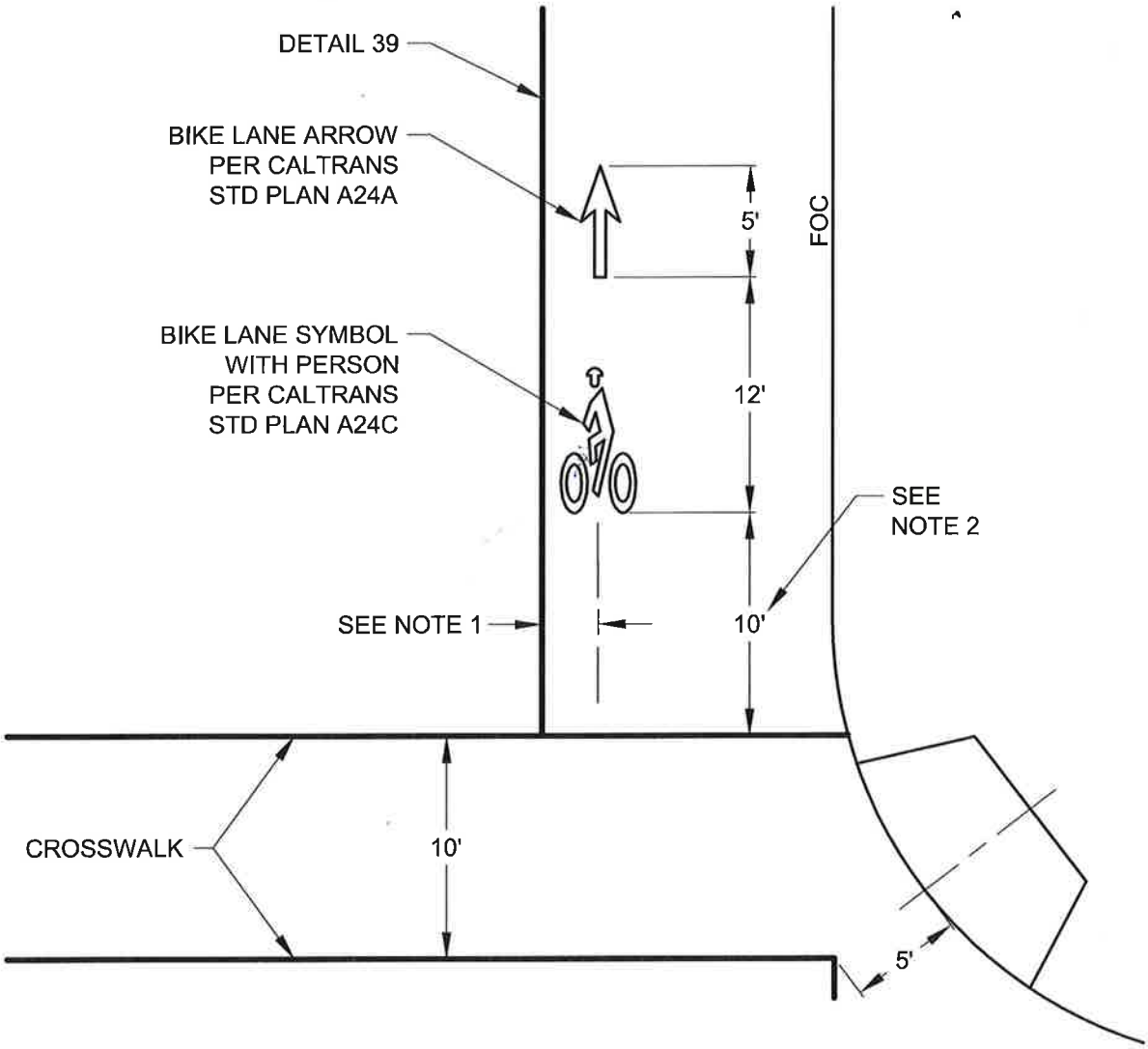

NOTES:

1. CENTER LEGEND IN BIKE LANE.
   ASSUME 8' MIN PARKING LANE WIDTH IF NO PARKING LANE STRIPED.

2. AT LOCATIONS WITHOUT CROSSWALKS, USE SIMILAR DIMENSIONS AS UNMARKED CROSSWALK.

Dr. JP	No.	Date	Revision	Appr.	Approved By:	STD PLAN
Ch. DK	1	4/07	ADDED NOTES		8/17/17	713
Date	2	8/17	REMOVED "BIKE LANE"		Lyman Chang, City Engineer, RCE No. 53149 — Date	

CITY OF LODI

PUBLIC WORKS DEPARTMENT

STOP PAVEMENT MARKINGS AND DETAIL 21

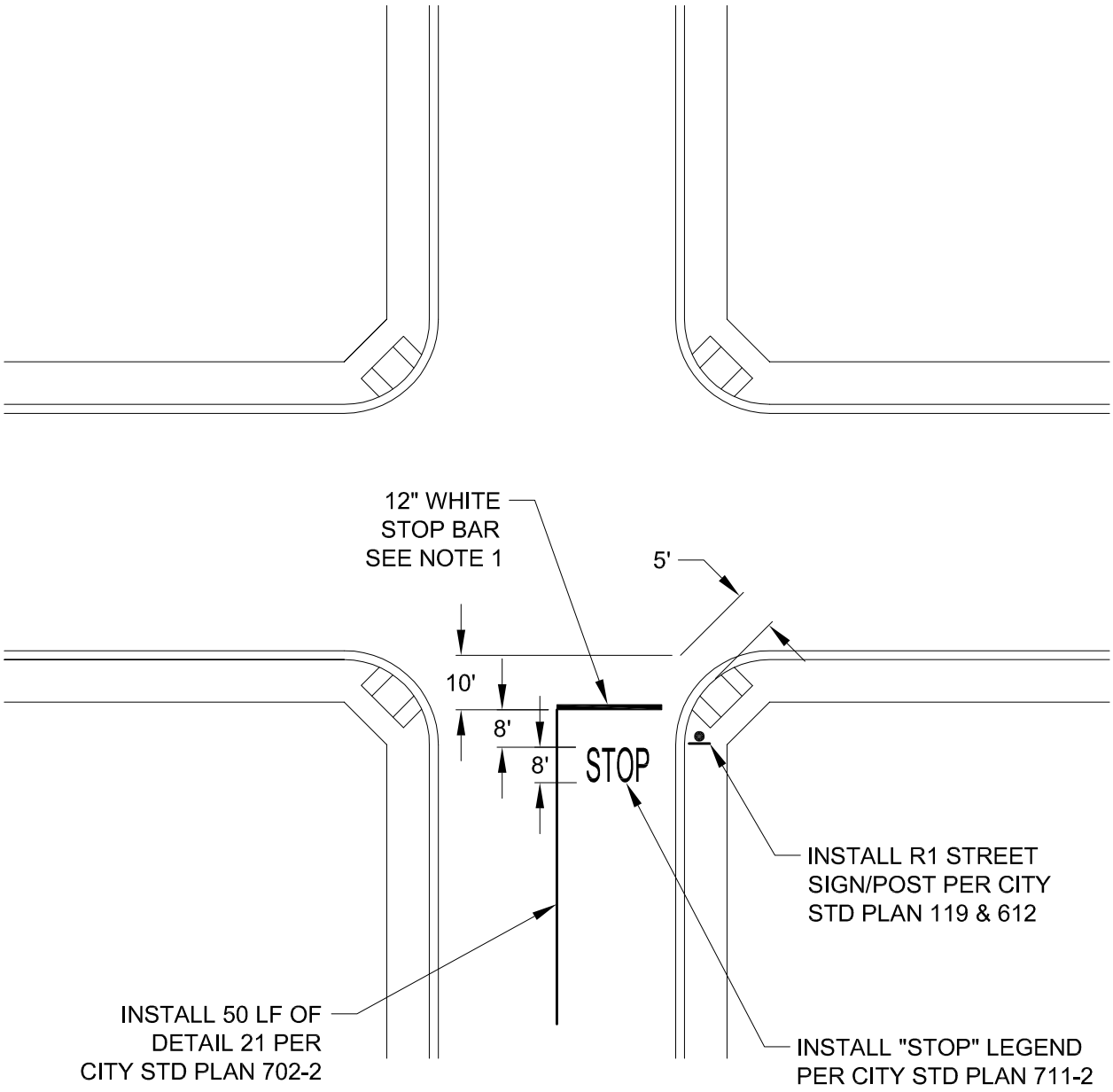

NOTES:

1. STOP BAR MAY BE INSTALLED AT ALTERNATE LOCATION AS APPROVED BY CITY ENGINEER.

Dr. KBG	No.	Date	Revision	Appr.	Approved By:	STD PLAN
	1	2/05	NEW STANDARD PLAN		F. Wally Sandelin, City Engineer, R.C.E. 39895 — 2/2/05 Date	714
Ch. PJF						
Date 11/04						

CITY OF LODI

PUBLIC WORKS DEPARTMENT

STOP PAVEMENT MARKINGS AND DETAIL 22

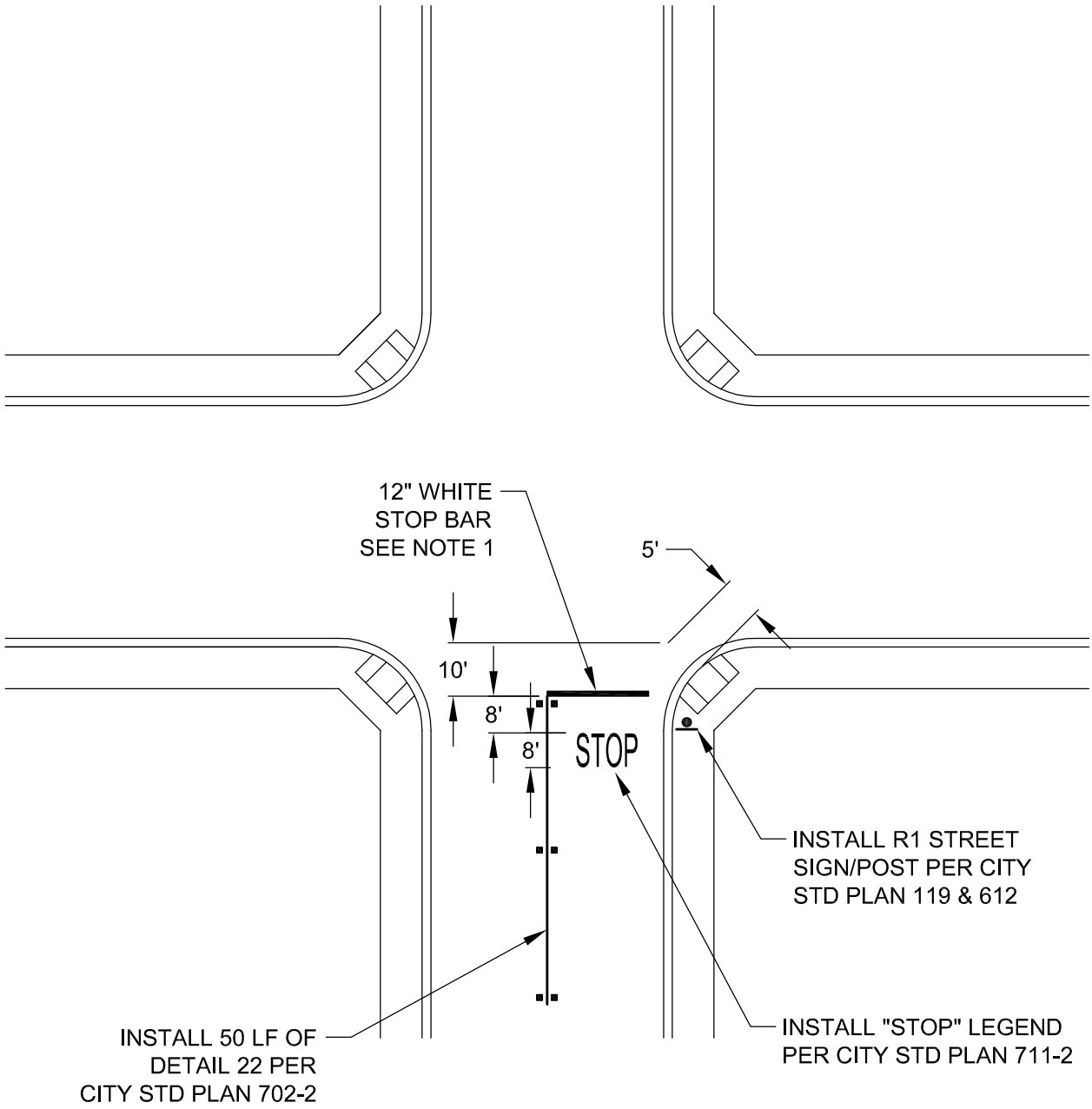

NOTES:

1. STOP BAR MAY BE INSTALLED AT ALTERNATE LOCATION AS APPROVED BY CITY ENGINEER.

Dr. KBG	No.	Date	Revision	Appr.	Approved By:	STD PLAN
	1	2/05	NEW STANDARD PLAN		F. Wally Sandelin, City Engineer, R.C.E. 39895 — 2/2/05 Date	715
Ch. PJF						
Date 11/04						

CITY OF LODI

PUBLIC WORKS DEPARTMENT

FIRE HYDRANT PAVEMENT MARKER LOCATIONS

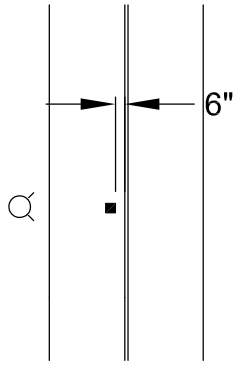

TWO LANE STREET

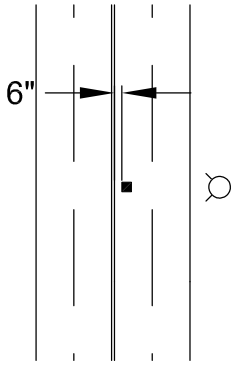

MULTI-LANE STREET

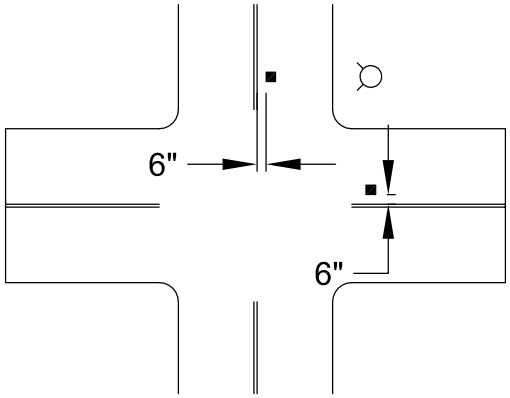

TWO LANE STREET
AT INTERSECTION

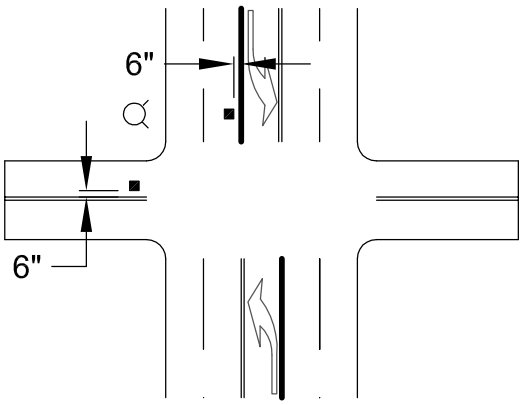

FOUR LANE STREET WITH
TURN LANE AT INTERSECTION

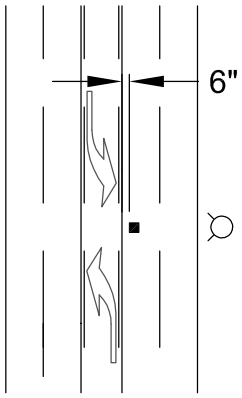

MULTI-LANE STREET
WITH TURN LANE

LEGEND

HYDRANT

BLUE RETROREFLECTIVE
PAVEMENT MARKER
PER STANDARD PLAN 700

Dr. KBG	No.	Date	Revision	Appr.	Approved By:	STD PLAN
	1	2/05	NEW STANDARD PLAN		F. Wally Sandelin 2/2/05	716
Ch. PJF					F. Wally Sandelin, City Engineer, R.C.E. 39895 — Date	
Date 11/04						

CITY OF LODI

PUBLIC WORKS DEPARTMENT

YIELD PAVEMENT MARKING

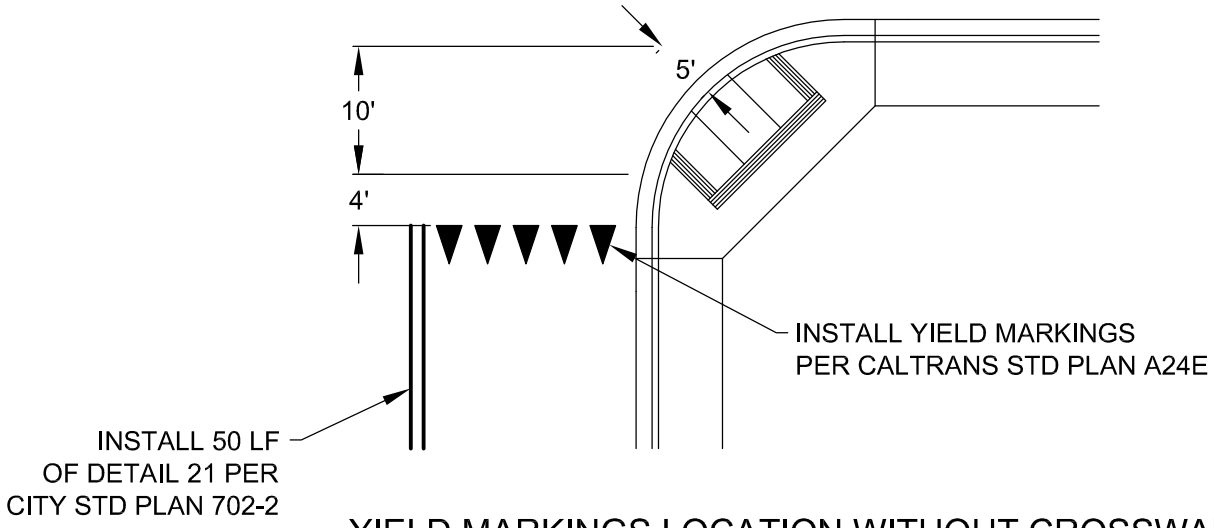

YIELD MARKINGS LOCATION WITHOUT CROSSWALK

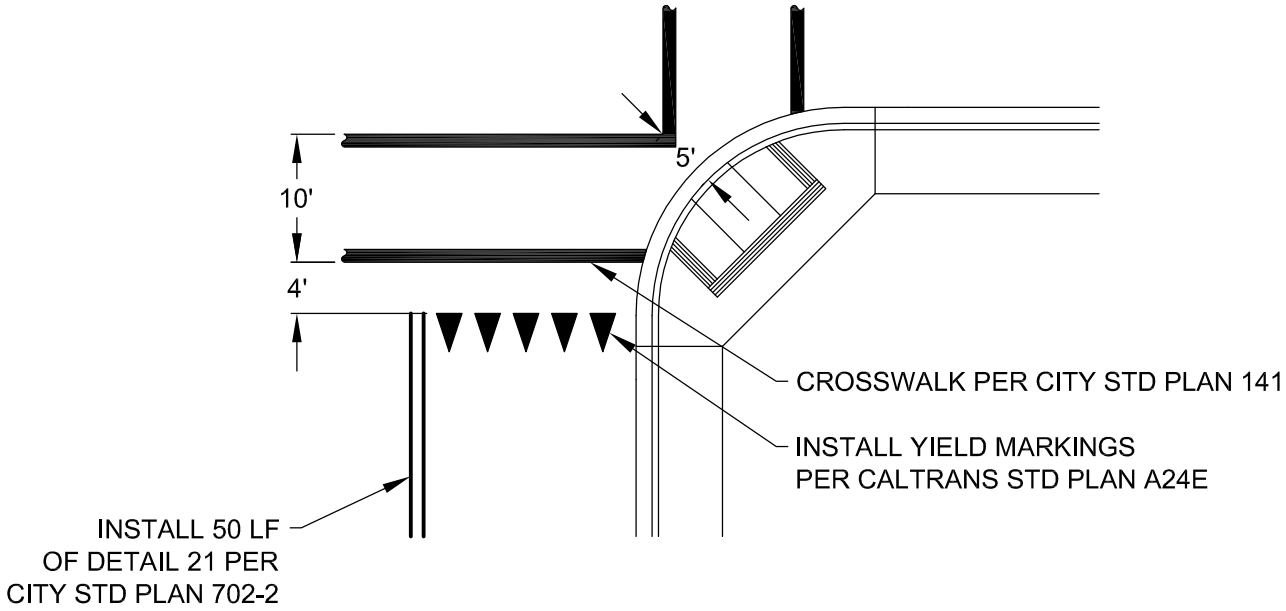

YIELD MARKINGS LOCATION AT CROSSWALK

NOTES:

1. YIELD MARKINGS MAY BE INSTALLED AT ALTERNATE LOCATION AS APPROVED BY CITY ENGINEER.

Dr. DK	No.	Date	Revision	Appr.	Approved By:	STD PLAN
Ch. PJF					Charlie Swimley City Engineer / Deputy Public Works Director RCE No. 52842 — Date	717
Date 2/25/15						

Appendix E: Grievance Form

City of Lodi
ADA Complaint / Grievance Form

Complainant: _____

Person Preparing Complaint (if different from Complainant): _____

Relationship to Complainant (if different from Complainant): _____

Street Address & Apt. No.: _____

City: _____ State: _____ Zip: _____

Phone: (_____) _____ E-mail:_____

Please provide a complete description of the specific complaint or grievance:

_____
_____
_____
_____

Please specify any location(s) related to the complaint or grievance (if applicable):

_____
_____
_____

Please state what you think should be done to resolve the complaint or grievance:

_____
_____
_____
_____

Please attach additional pages as needed.

□ Please do not contact me personally.

Signature: _____ **Date:** _____

Return to:

Joseph Wood
City of Lodi ADA/Section 504 Coordinator
PO Box 3006
221 W. Pine Street
Lodi, CA 95241-1910

Upon request, reasonable accommodation will be provided in completing this form, or copies of the form will be provided in alternative formats. Contact the ADA / Section 504 Coordinator at the address listed above, via telephone (209) 333-6700 or via Telecommunication Relay Service (TRS) by dialing 7-1-1, or via e-mail at jwood@lodi.gov.

This page intentionally left blank

DRAFT